SOUTHERN CONNECTICUT STATE UNIVERSITY
LOT #7 PARKING GARAGE
NEW HAVEN, CONNECTICUT
PROJECT: CF- RS - 273

BID OPENING	**1:00 P.M.**	**June 16, 2010**
ADDENDUM NUMBER 5	**DATE OF ADDENDUM**	**June 7, 2010**

The following clarifications are applicable to drawings and specifications for the project referenced above.

Item 1

The following sketches are included:
ASK-4 (Shows location of elevator access panels) Modifies Enlarged Plan Detail 4 on A4.01
CPSK-1(Addition of trench drain on Mechanical Plumbing Drawings) Modifies Plan 1 on MP1.01

Item 2

Delete Section: 012500 Substitution Procedures
Insert New Section 012500 Substitution Procedures

tem 3

In Section 034100, Paragraph 2.03 Delete Sub-Paragraph E.

Item 4

In Section 034100, Paragraph 3.03 Delete Sub-Paragraphs B-G

Item 5

In Section 034100, Paragraph 3.05 Delete Sub-Paragraphs C & D. Add New Sub-Paragraph C "Erect Members per standard erection procedures per PCI MNL-116, 127 & 135."

Item 6

Delete Section: 083113 Access Doors
Insert New Section 083113 Access Doors

Item 7

Attached is Simplex-Grinnell Scope of work and Pricing for Base Bid and Addendum #2.

Item 9

See attached Response to Blakeslee Prestress Questions.

Item 10

In Section 079500, Paragraph 2.01 Sub-section A add Watson Bowman Acme as an acceptable Manufacture. See attached approved Equal or Substitute Product Request.

Item 11

See attached responses of Contractor RFI's

All questions must be in writing (not phone or e-mail) and must be forwarded to the consulting Architect/Engineer (Scott Pellman fax 203-639-8384) with copies sent to the DPW Project Manager (Michael Milne fax 860 713-7261)

End of Addendum Number Five

Mellanee Walton

Mellanee Walton
Associate Fiscal Administrative Officer
Department of Public Works

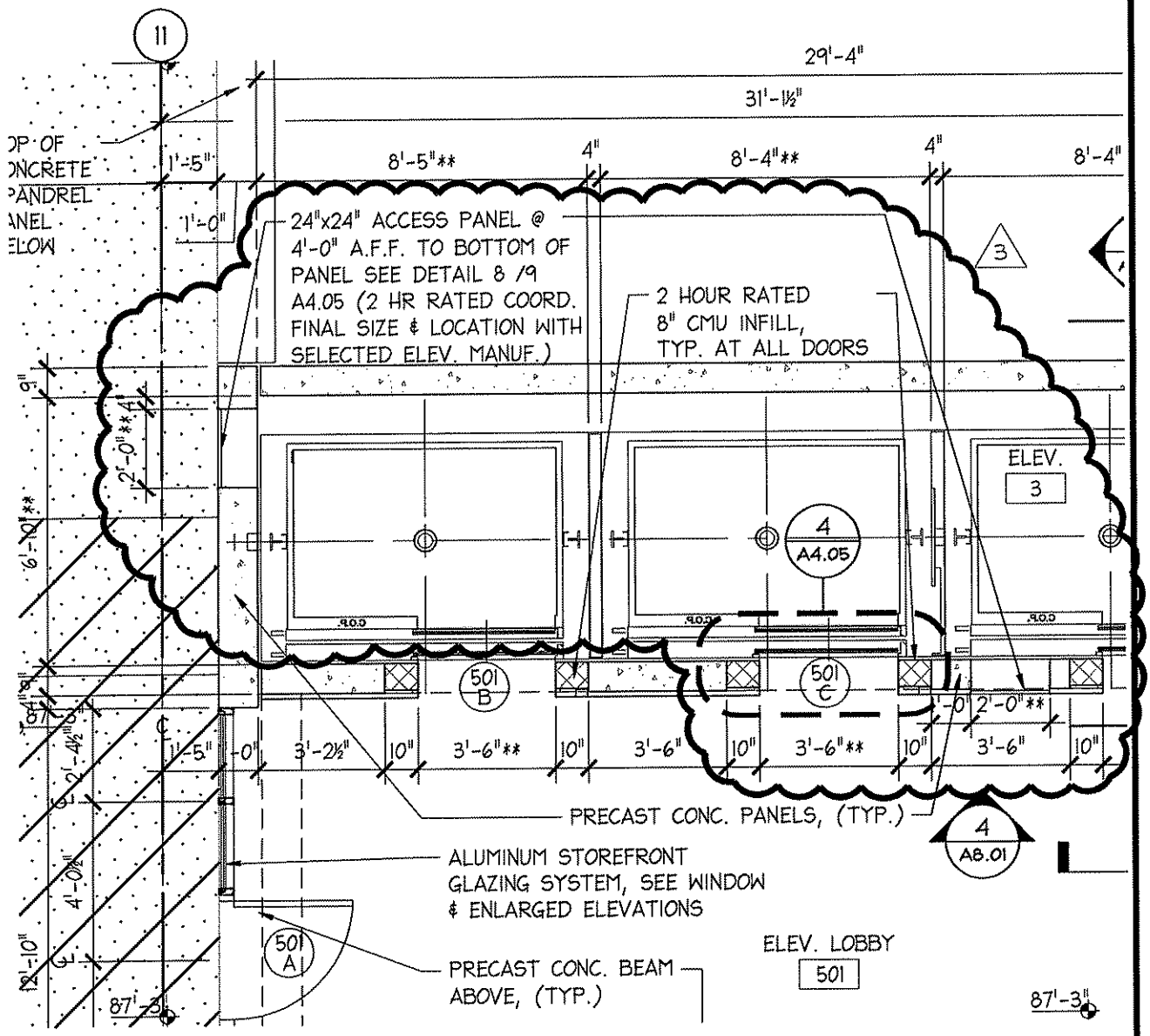

4 ENLARGED PLAN - STAIR 1 - G5 LEVEL

1/4" = 1'-0"

A4.01

STATE OF CONNECTICUT DEPARTMENT OF PUBLIC WORKS	DRAWING PREPARED BY: BL COMPANIES 355 RESEARCH PARKWAY MERIDEN, CONNECTICUT, 06450	date 07/10/09 scale AS NOTED
drawing title ENLARGED STAIR PLANS AND SECTION – STAIR 1	project 100% CONSTRUCTION DOCUMENTS PACKAGE SCSU PARKING GARAGE CF–RS–273	drawn by approved by
REVISIONS mark | date | description 3 | 6/2/10 | ISSUED FOR ADDENDA #5	CAD no. A07D1007401 project no. CF–RS–273	drawing no. ASK–4

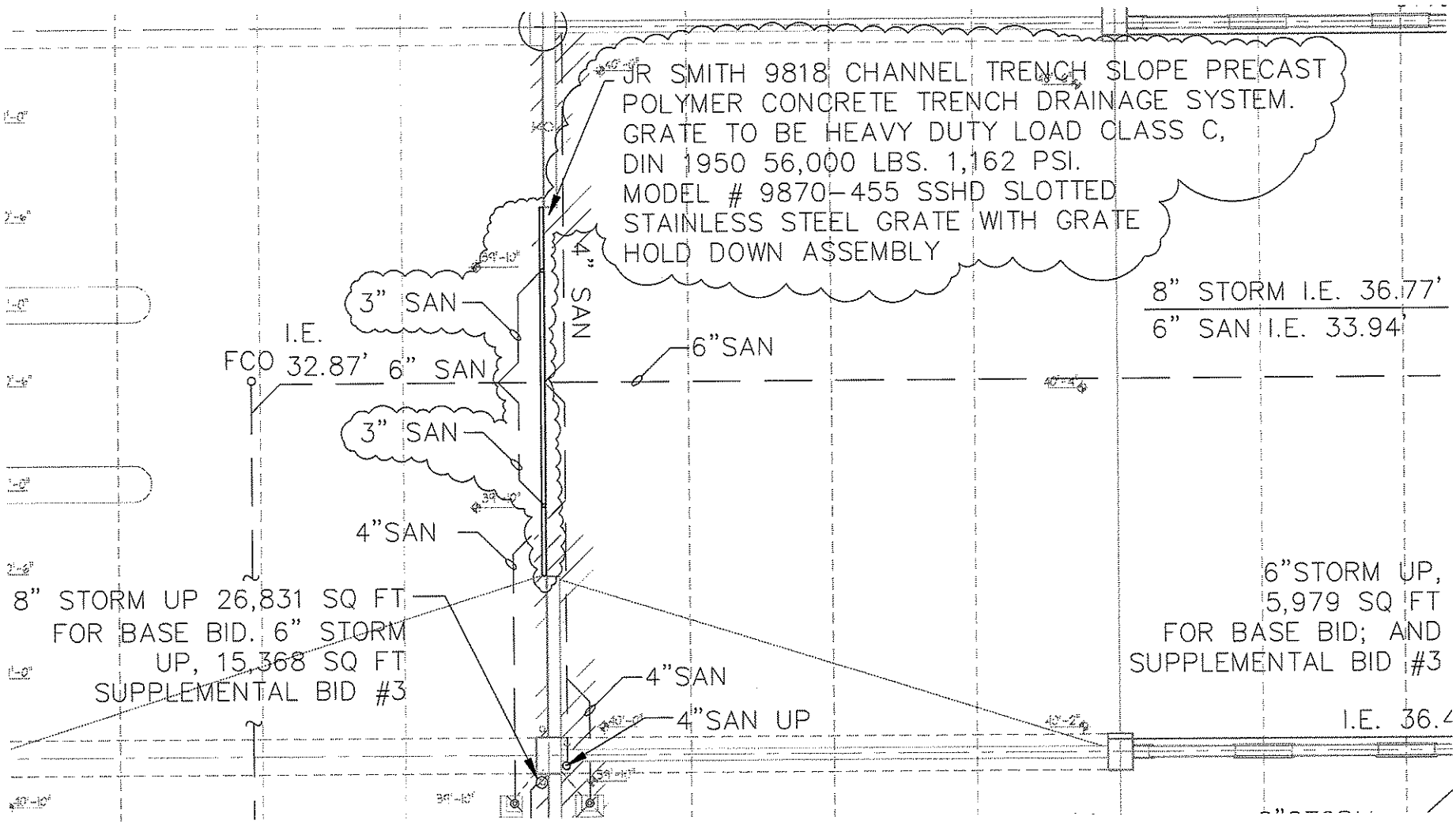

BL Companies
ARCHITECTURE
ENGINEERING
PLANNING
LANDSCAPE ARCHITECTURE
LAND SURVEYING
ENVIRONMENTAL SCIENCES

355 Research Parkway
Meriden, CT 06450
(203) 630-1406
(203) 630-2615 Fax

SCSU PARKING GARAGE

STATE OF CONNECTICUT
DEPARTMENT OF PUBLIC WORKS
CF-RS-273

Designed	SAC
Drawn	AMA
Checked	SAC
Approved	
Scale	1"=1/8"
Project No.	07D1007101
Date	06/02/10
CAD File	MP07D1007101

CPSK-MP1.01-1

PART 1 - GENERAL

1.1 RELATED DOCUMENTS

A. Drawings and general provisions of the Contract, including General and Supplementary Conditions and other Division 01 Specification Sections, apply to this Section.

1.2 SUMMARY

A. This Section includes administrative and procedural requirements for handling requests for equals and substitutions made after award of the Contract.

B. Related Sections: The following Sections contain requirements that relate to this Section:

1. Division 01 Section 01 33 00 "Submittal Procedures" specifies requirements for submitting the Contractor's Construction Schedule and the Submittal Schedule.
2. Division 01 Section 01 42 20 "Reference Standards and Definitions" specifies the applicability of industry standards to products specified.
3. Division 01 Section 01 60 00 "Product Requirements" specifies requirements governing the Contractor's selection of products and product options.

1.3 DEFINITIONS

A. Definitions in this Article do not change or modify the meaning of other terms used in the Contract Documents.

B. Equals or Substitutions General: Changes in products, materials, equipment, and methods of construction required by the Contract Documents proposed by the Contractor after award of the Contract.

1.4 SUBMITTALS

A. Equals and Substitution Request Submittals: The Owner will consider requests for equals or substitutions if made prior to the Receipt of the Competitive Bid. The information on all materials shall be consistent with the information herein. After the contract award, substitutions will be considered for materials or systems specified that are no longer available. It will not be considered if the product was not purchased in a reasonable time after award. The Contractor shall submit all equal and substitutions requests on the "Substitution Request" Form at the end of this Section. See Article 15 in the General Conditions for further refinement and information.

1. The Contractor is required to prepare and submit three (3) copies of the required data for the first manufacturer listed or procedure listed in the specifications section with reference to all of the following areas: the substance and function considering quality, workmanship, economy of operation, durability and suitability for purposes intended including the size, rating and cost. All submissions must include all the required data for the first listed manufacturer or procedure as specified, as well as the required data for the proposed Equal or Substitution. This will enable the Owner and Architect to determine that the proposed Equal or Substitution is or is not substantially equal to the first listed manufacturer or procedure.
2. Identify the product or the fabrication or installation method to be replaced in each request. Include related Specification Section and Drawing numbers.
3. Provide complete documentation showing compliance with the requirements for equals or substitutions, and the following information, as appropriate:

a. Coordination information, including a list of changes or modifications needed to other parts of the Work and to construction performed by the Owner and separate contractors that will be necessary to accommodate the proposed Equal or Substitution.

b. A detailed comparison chart of significant qualities of the proposed substitution with those of the Work specified. Significant qualities may include elements, such as performance, weight, size, durability, and visual effect.

c. Product Data, including Shop Drawings and descriptions of products and fabrication and installation procedures.

d. Samples, where applicable or requested.

e. A statement indicating the effect on the Contractor's Construction Schedule or CPM Schedule compared to the schedule without approval of the Equal or Substitution. Indicate the effect on overall Contract Time.

f. Cost information, broken down, including a proposal of the net change, if any in the Contract Sum.

g. The Contractor's certification that the proposed Equal or Substitution conforms to requirements in the Contract Documents in every respect and is appropriate for the applications indicated.

h. The Contractor's waiver of rights to additional payment or time that may subsequently become necessary because of the failure of the Equal or Substitution to perform adequately.

4. Architect's Action: If necessary, the Architect will request additional information or documentation for evaluation within seven (7) days of receipt of the original request for equal or substitution request. The Architect will notify the Construction Administrator who will notify the Owner of recommended acceptance or rejection of the proposed equal or substitution, within fourteen (14) days of receipt of the request, or seven (7) days of receipt of additional information or documentation, whichever is later. The Construction Administrator will give final acceptance or rejection by the Owner not less than seven (7) days after notification.

   a. Any request deemed an "Equal" and accepted by the Construction Administrator, Architect, Owner, and Agency will result in written notification to the Contractor and will not be in the form of a change order for an "Equal".

   b. Any request deemed a "Substitution" and rejected or approved by Construction Administrator, Architect, and Owner may result in written notification to the Contractor and may be in the form of a change order if the "Substitution" is approved.

PART 2 - PRODUCTS

2.1 EQUAL OR SUBSTITUTIONS

A. Conditions: The Architect will consider the Contractor's request for Equal or Substitution of a product or method of construction when one or more of the following conditions are satisfied, as determined by the Architect. If the following conditions are not satisfied, the Architect will return the requests to the Construction Administrator without action except to record noncompliance with these requirements.

1. The proposed request does not require extensive revisions to the Contract Documents.
2. The proposed request is in accordance with the general intent of the Contract Documents.
3. The proposed request is timely, fully documented, and/or properly submitted.

4. The proposed request can be provided within the Contract Time. However, the Architect will not consider the proposed request if it is a result of the Contractor's failure to pursue the Work promptly or coordinate activities properly.
5. The proposed request will offer the Owner a substantial advantage, in cost, time, energy conservation, or other considerations, after deducting additional responsibilities the Owner must assume. However, if the proposed request requires the Owner to incur additional responsibilities, including but not limited to, additional compensation to the Architect for redesign and evaluation services, increased cost of other construction by the Owner or similar considerations, then the Owner will have just cause to reject the request for Equal or Substitution.
6. The proposed request can receive the necessary approvals, in a timely manner, required by governing authorities having jurisdiction.
7. The proposed request can be provided in a manner that is compatible with the Work as certified by the Contractor.
8. The proposed request can be coordinated with the Work as certified by the Contractor.
9. The proposed request can uphold the warranties required by the Contract Documents as certified by the Contractor.

B. The Contractor's submission and the Architect's review of Submittals, including but not limited to, Samples, Manufacturer's Data, Shop Drawings, or other such items, which are not clearly identified as a request for an Equal or Substitution, will not be considered or accepted as a valid request for an Equal or Substitution, nor does it constitute an approval.

PART 3 - EXECUTION (Not Applicable)

END OF SECTION 01 25 00

State of Connecticut

Equal or Substitute Product Request

☐ Pre-Bid ☐ Post-Bid. 15.3.2.1 ☐ Post Bid. 15.3.2.2 ☐ Post-Bid. 15.3.2.3

SEE PROCEDURE AND INSTRUCTIONS

Department of Public Works

Request No.: Dated:

To: State of Connecticut
Department of Public Works

Department of Public Works Project Number:

Project Name and Location:

References: Specifications - Section: Paragraph(s):
Drawings - Drawing No.: Detail(s):

Contractually Specified Product:

Contractor Proposed Product:

Proposed product is an ☐ Equal ☐ Substitute Product Model Number:

Proposed product is ☐ New ☐ 2-5 Years Old ☐ 5-10 Years Old ☐ More than 10 Years

See attached data for both Specified and Proposed Products as required by Specifications for this Project

Data attached: ☐ Drawings ☐ Product Data ☐ Reports ☐ Samples ☐ Tests ☐ Other:

Reason(s) for not providing the Specified Product:

Similar Installation:

Project: Owner:

Location: Consultant:

Date Installed:

Will proposed Substitute Product impact other parts of the Work? ☐ No ☐ Yes - see attached Explanation

Will proposed Substitute Product increase the Contract Time? ☐ No ☐ Yes - by ____ Days

The Undersigned Certifies that the proposed Request for an Equal or Substitute Product conforms to the Specifications for this project,

Request submitted by the General Contractor:
name

By:
name title signature date

CONTRACTOR - Send copies to: Supervising Project Manager - Project Manager - Construction Administrator

Consultant's Review - This Substitution Request is:

☐ **Approved** ☐ **Approved as Noted** ☐ **Rejected - Use Specified Material(s).**

Review Issued by:
name signature date

Consultant - Send completed copies to: PM C A Other:

Approved as noted by Consultant

Project Manager: signature date

Copy: Project File File R2

SECTION 083113
ACCESS DOORS AND FRAMES

PART 1 - GENERAL

1.01 SUMMARY

A. Work Included: The Work of this Section includes, but is not limited to, the following:

1. Interior access doors assemblies in wall and ceiling construction, as indicated.

1.02 SUBMITTALS

A. Product Data: Submit product data for each type of access door assembly specified, including details of construction relative to materials, individual components, profiles, and finishes.

1. Include complete schedule, including types, general locations, sizes, wall and ceiling construction details, latching or locking provisions, and other data pertinent to installation.
2. No work maybe performed without Architect's approval of access door type, size and location.

B. Shop Drawings: Submit shop drawings showing fabrication and installation of customized access doors and frames, including details of each frame type, elevations of door design types, anchorage, and accessory items. Details shall be drawn at full scale.

C. Samples: Provide a 12" square sample of each panel face material, showing custom and factory-finished color and texture.

D. Coordination Drawings: Reflected ceiling plans drawn to scale and coordinating penetrations and ceiling-mounted items with concealed framing, suspension systems, piping, ductwork, and other construction. Show the following:

1. Method of attaching door frames to surrounding construction.
2. Ceiling-mounted items including access doors and frames, lighting fixtures, diffusers, grilles, speakers, sprinklers, and special trim.

E. Verification: Obtain specific locations and sizes for access doors from trades requiring access to concealed equipment, and indicate on submittal schedule.

1.03 QUALITY ASSURANCE

A. Single-Source Responsibility: Obtain access doors for entire Project from one source and by a single manufacturer.

B. Size Variations: Obtain Architect's acceptance of manufacturer's standard size units, which may vary slightly from sizes indicated.

C. Coordination: Furnish inserts and anchoring devices which must be built into other work for installation of access doors. Coordinate delivery with other work to avoid delay.

PART 2 - PRODUCTS

2.01 MANUFACTURERS

A. Available Manufacturers: Subject to compliance with requirements, provide access door assemblies as manufactured by one of the following:
   1. Acudor Products Inc.
   2. J. L. Industries, Inc.
   3. Karp Associates, Inc.

2.02 MATERIALS

A. Cold-Rolled Steel Sheet: ASTM A 1008, Commercial Steel (CS), Type B; suitable for exposed applications.

B. Metallic-Coated Steel Sheet: ASTM A 653, Commercial Steel (CS), Type B, with A60 zinc-iron-alloy (galvannealed) coating or G60 mill-phosphatized zinc coating; stretcher-leveled standard of flatness; with minimum thickness indicated representing specified thickness according to ASTM A 924.

2.03 ACCESS DOORS

A. Flush, Non-Rated Access Doors and Trimless Frames: Units consisting of frame, door, hardware, and complying with the following requirements:
   1. Door: Minimum 0.060 inch thick steel sheet, set flush with surrounding finish surfaces.
   2. Frame: Minimum 0.060 inch thick steel sheet, with drywall bead flange.
   3. Hinges: Continuous piano hinge.
   4. Locks: Flush, screwdriver-operated cam.

B. Flush, Fire-Rated Access Doors and Trimless Frames: Units consisting of frame without trim, door, hardware, and complying with the following requirements:
   1. Fire-Resistance Rating: 2 hours, or as indicated to meet the fire resistance rating of the wall construction where the access door shall be installed.
   2. Door: Minimum 0.036 inch steel sheets with a core of mineral-fiber insulation, flush panel construction, or minimum 0.060 inch thick sheet metal, set flush with surrounding finish surfaces.
   3. Frame: Minimum 0.060 inch thick steel sheet with drywall bead.
   4. Hinges: Continuous piano hinge.
   5. Automatic Closer: Spring type.
   6. Lock: Key-operated cylinder lock with interior release.
   7. ***Sizes: 24" x 24" and as indicated on drawings.***

2.04 FABRICATION

A. General: Furnish each access door assembly manufactured as an integral unit, complete with all parts and ready for installation.

B. Steel Access Doors and Frames: Continuous welded construction. Grind welds smooth and flush with adjacent surfaces. Furnish attachment devices and fasteners of type required to secure access panels to types of supports indicated.

C. Locking Devices: Furnish flush, screwdriver-operated cam locks of number required to hold door

in flush, smooth plane when closed, except furnish key locks where indicated.

D. Separate dissimilar metals by painting each metal surface in area of contact with a bituminous coating or by other permanent separation as recommended by manufacturers of dissimilar metals.

2.05 STEEL FINISHES

A. Comply with NAAMM's "Metal Finishes Manual for Architectural and Metal Products" for recommendations for applying and designating finishes.

1. Surface Preparation for Steel Sheet: Clean surfaces to comply with SSPC-SP 1, "Solvent Cleaning," to remove dirt, oil, grease, or other contaminants that could impair paint bond. Remove mill scale and rust, if present, from uncoated steel, complying with SSPC-SP 5/NACE No. 1, "White Metal Blast Cleaning," or SSPC-SP 8, "Pickling."
2. Surface Preparation for Metallic-Coated Steel Sheet: Clean surfaces with nonpetroleum solvent so surfaces are free of oil and other contaminants. After cleaning, apply a conversion coating suited to the organic coating to be applied over it. Clean welds, mechanical connections, and abraded areas, and apply galvanizing repair paint specified below to comply with ASTM A 780.

B. Factory-Primed Finish: Apply shop primer immediately after cleaning and pretreating.

C. Painted Finish: Refer to Section 09900 - Painting for materials and application of field painted finishes to access doors specified within this Section.

PART 3 - EXECUTION

3.01 PREPARATION

A. Advise Installers of other work about specific requirements relating to access door installation, including sizes of openings to receive access door and frame, as well as locations of supports, inserts, and anchoring devices. Furnish inserts and anchoring devices for access doors that must be built into other construction. Coordinate delivery with other work to avoid delay.

3.02 INSTALLATION

A. Comply with manufacturer's instructions for installing access doors. Coordinate installation with work of other trades.

B. Set frames accurately in position and attach securely to supports with plane of face panels aligned with adjacent finished surfaces.

3.03 ADJUST AND CLEAN

A. Adjust hardware and panels after installation for proper operation.

B. Remove and replace panels or frames which are warped, bowed or otherwise damaged.

END OF SECTION 083113

SimplexGrinnell
BE SAFE.

80 Clark Dr 5d
East Berlin, CT 06023
(860) 438-3200
FAX: (860) 438-3259
www.simplexgrinnell.com

SimplexGrinnell Quotation

TO:
SimplexGrinnell - 129 Hartford
80 Clark Dr Unit 5-D
East Berlin, CT 06023-1103

Project: SCSU Parking Garage - 1200 car
Customer Reference:
SimplexGrinnell Reference: 129417297
Date: 06/04/2010

SimplexGrinnell is pleased to offer for your consideration this quotation for the above project.

Comments
Please read the notes below and call if you have any questions.

Contact Information:
Sherri McKirdy
Electronic System Sales Representative
860-438-3200 x163
scmkirdy@simplexgrinnell.com <mailto:scmkirdy@simplexgrinnell.com>
SimplexGrinnell, LP
80 Clark Drive, Unit 5d
East Berlin, CT 06023

SimplexGrinnell's Scope of Work:

SimplexGrinnell to provide equipment, installation, programming and testing for SCSU New (1200 car) Parking Garage. This quote is the 'Main Bid'.
("Bid #2" will be on a separate quote of it's own).

Quote based on prevailing wage and CT State Contract Pricing # 98PSX0023.

Per Plans and Specs dated 7/10/09 by BL Companies.
- New 4100 panel to be installed on ground floor where indicated on drawings. (Level G1)
- New remote annunciator (w/ mic) to be installed where indicated on drawings. (Level G2)

New equipment/devices as follows:

Addressable smokes: 6
Heat detectors: 27
Pulls, weatherproof (per drawings 7/10/09): 32
Speaker strobe, weatherproof: 256

No tampers and flows necessary - confirmed per BL Companies.

SimplexGrinnell Quotation

Comments (continued)

Quote includes all new wiring and conduit, wiring terminations, graphics update, download to network, test & recert., and "extra product" - including labor to install those parts.

Also included:
- Patching
- Firestopping our penetrations.

Permit not included.

Security portion of this project (cameras and Code Blue) is not included in this quote.

Respectfully,
Sherri McKirdy

THIS PROPOSAL IS BASED UPON ONLY THOSE ITEMS DENOTED BY [X]":

[] Specification section:
[X] Information from plans Drawing Numbers and Dates: 7/10/09
[] Up to and including addendum:
[] Customer provided bill of material
[] Verbal request
[] Value engineering
[] Design Build

THIS QUOTATION INCLUDES ONLY THOSE ITEMS DENOTED BY "[X]":

[X] Equipment as listed
[] Demolition of existing devices as indicated on specs/drawings.
[] CT State Sales Tax
[X] Freight (F.O.B. shipping point)
[X] Submittal and Risers
[] PE Sealed Drawings
[X] Panel terminations
[] Technical installation support including programming
[] Permit
[] Inspection Fees
[] Payment/Performance Bonds
[X] 1 functional system certification test
[X] 1 AHJ test
[X] 1 10% Re-Test
[X] 1 Separate Elevator Test
[] 2 Hours of operation and maintenance training
[X] Close out documentation
[] Interface to non-SimplexGrinnell provided equipment i.e.: HVAC and elevator

SimplexGrinnell Quotation

Comments (continued)

[X] One year standard warranty
[] Monitoring
[] AHCA Inspection

THIS QUOTATION DOES NOT INCLUDE THE FOLLOWING:

Phased Checkout
Raceway or standard electric boxes
120vac power
Fire protection switches or gas solenoids
Phone lines
Remote station monitoring contract (available upon request)
Knox box
Cutting, drilling, patching, fire caulking or painting
Interface to non-SimplexGrinnell provided equipment i.e.: HVAC and elevator
Fire watch
Weatherproof and conditioned control equipment housing
No asbestos abatement is identified, expected or included in this contract. All policies and procedures referenced in the specification will be followed as required.
No Lead paint abatement is identified, expected or included in this contract. All policies and procedures referenced in the specification will be followed as required.
Cost for CAD files

It is SimplexGrinnell's (SG) understanding that these drawings and specifications represent the work to be accomplished in its entirety and no additional work or materials is expected or required. This quote covers direct costs only and we reserve the right to claim for impact and consequential costs.

SCHEDULE MILESTONES:

Configured Submittals and Shop-drawings: **14 Days** to develop upon Receipt of P.O
Fab and Delivery of Equipment- non standard Equipment/BackBoxes: **21 Days**
Fab and Delivery of Equipment- Field Devices: **7 Days**
Fab and Delivery of Panels/Transponders: **14 Days**
Electrical Contractor Mechanically/Electrically complete **-14 days** from project completion to Commission System.
TIME IS OF THE ESSENCE with regard to this quotation as it relates to the project schedule which is **[ ]** known **[X]** unknown at this time.

ADDITIONAL NOTES:

If SimplexGrinnell is awarded this project we will need:
- A complete set of bid documents including all specifications and any addendums
- An electronic CAD file in AutoCAD shall be sent to smckirdy@simplexgrinnell.com

SimplexGrinnell Quotation

Comments (continued)

<mailto:smckirdy@simplexgrinnell.com> or mailed to the branch address provided on this quotation.

- A complete schedule
- A copy of the "Notice of Commitment"
- Your P.O. or contract will need to reference this proposal # and amount. This proposal and its terms and condition shall take precedence. Your Purchase Order or contact is subject to review and must be mutually agreeable.

Quotation is valid for a period of 30 days ONLY unless modified in writing by SimplexGrinnell.

All work is to be performed during normal SimplexGrinnell hours of 8am to 5pm Monday through Friday with the exception of company sponsored holidays unless specifically noted otherwise. We reserve the right to correct this quote for errors and omissions.

As stated above, SimplexGrinnell will perform the work pursuant to the attached Terms and Conditions. Should the parties fail to execute a mutually agreeable definitive agreement, all work performed by SimplexGrinnell on or related to the above captioned project (with the exception of any monitoring services anticipated, which will only be performed pursuant to the unaltered terms and conditions of SimplexGrinnell's standard Monitoring Agreement) will be performed pursuant to the attached Terms and Conditions.

Please indicate your approval of this quotation by signing the last page and returning to my attention as noted below.

Respectfully,

Sherri McKirdy
Electronic Systems Sales
Phone: (860)438-3200 x163
Cell: (860)338-1378
Fax: (860)438-3259
Email: smckirdy@simplexgrinnell.com <mailto:smckirdy@simplexgrinnell.com>
AA/EOE

QUANTITY	MODEL NUMBER	DESCRIPTION
	SCSU Parking Garage - 1200 car	
	FA Equip SCSU Parking Garage (	
6	4098-9714	PHOTO SENSOR
6	4098-9792	SENSOR BASE
27	4098-9733E	HEAT SENSOR HUMID ENV
27	4098-9792	SENSOR BASE
32	2099-9138	PULL STAT CAST S/A B LOCK SPST
32	2975-9211	WEATHERPROOF BOX FOR 2099-9138

SimplexGrinnell Quotation

QUANTITY	MODEL NUMBER	DESCRIPTION
32	4090-9051	SUPERVISED IAM
32	STI-1130	STOPPER II
256	ET70WP-24185W-FR	185CD,WEATHERPROOF,WALL,RED
256	IOB-R	INDOOR/OUTDOOR SURFACE BACKBOX
4	4090-9001	SUPERVISED IAM
5	4090-9002	RELAY IAM
4	2975-9426	BACKBOX/DOOR/RETAINER BEIGE #3
1	2975-9425	BACKBOX/DOOR/RETAINER BEIGE2
6	2081-9296	BATTERY 50AH
1	DPFA	Misc. material
	FA Extra FA equipment	
1	4098-9714	PHOTO SENSOR
1	4098-9792	SENSOR BASE
2	4098-9733	HEAT SENSOR
2	4098-9792	SENSOR BASE
3	2099-9138	PULL STAT CAST S/A B LOCK SPST
3	2975-9211	WEATHERPROOF BOX FOR 2099-9138
10	ET70WP-24185W-FR	185CD,WEATHERPROOF,WALL,RED
10	IOB-R	INDOOR/OUTDOOR SURFACE BACKBOX
	SCSU Parking Garage Panel (SCS	
1	4100-9111	4100U PRECONFIG. DOMESTIC 120V
2	4100-0011	FACTORY USE ONLY-AUDIO SHIPKIT
5	4100-0634	POWER DISTRIBUTION MODULE 120V
4	4100-0636	BOX TO BOX HARNESS KIT
2	4100-0637	AUDIO BOX TO BOX HARNESS KIT
1	4100-0638	ADDITIONAL 24V HARNESS
1	4100-1241	MESSAGE EXPANSION, 8 MINUTES
1	4100-1255	AUDIO IF 3-8 CHANNEL
12	4100-1279	2" BLANK DISPLAY MODULE
1	4100-1280	8 SWITCH, 8 RED LED MODULE
1	4100-1288	64/64 LED/SWITCH CONTROLLER
1	4100-1294	LED/SWITCH SLIDE-IN LABEL KIT
10	4100-1326	FLEX 50W AMP W/3 NACS - 25V
11	4100-2300	EXPANSION BAY (PHASE 10 ONLY)
1	4100-2303	LEGACY CARD STABILIZER BRKT
5	4100-2320	AUDIO EXPANSION BAY
1	4100-3202	4 RELAYS, 10 AMP CONTACTS
10	4100-5101	XPS POWER, 3 NACS, 120VAC
2	4100-5125	RPS POWER, 3 NACS, 120VAC
5	4100-5128	BATTERY DIST TERM MODULE
1	4100-6014	NETWORK IFC CARD, MODULAR
1	4100-6052	EVENT/POINT REPORTING DACT
2	4100-6057	NETWORK MEDIA CARD FIBER OPTIC
1	4100-9621	BASIC AUDIO W/MIKE-DIGITAL
1	41002153	INDICATOR ONLY 3 BAY GLASS
4	41002163	INDICATOR ONLY 3 BAY SOLID
1	41007905	FACTORY BUILT-MAIN CONFIGURED

SimplexGrinnell Quotation

QUANTITY	MODEL NUMBER	DESCRIPTION
	Annunciator 1 - (w/ mic)	
1	4100-9612	INFOALARM BASIC REM ANNUN
4	4100-0010	FACTORY USE-NO INDIVIDUAL SALE
1	4100-0637	AUDIO BOX TO BOX HARNESS KIT
1	4100-1244	REMOTE AUDIO INTERFACE W/MIKE
1	4100-1252	AUDIO IF MODULE, SGL CHANNEL
4	4100-1279	2" BLANK DISPLAY MODULE
1	4100-1280	8 SWITCH, 8 RED LED MODULE
1	4100-1288	64/64 LED/SWITCH CONTROLLER
1	4100-1294	LED/SWITCH SLIDE-IN LABEL KIT
1	4100-2300	EXPANSION BAY (PHASE 10 ONLY)
2	4100-2320	AUDIO EXPANSION BAY
1	41002152	INDICATOR ONLY 2BAY GLASS
1	41007905	FACTORY BUILT-MAIN CONFIGURED

FA Installation
FA Installation

FA Support Labor
FA Support Labor

Total net selling price, FOB shipping point, $261,596.00

TERMS AND CONDITIONS

1. Payment. Payments shall be invoiced and due in accordance with the terms and conditions set forth above. Work performed on a time and material basis shall be at the then-prevailing Company rate for material, labor, and related items, in effect at the time supplied under this Agreement. Company shall invoice Customer for progress payments to one hundred (100%) percent based upon equipment delivered or stored, and services performed. Customers without established satisfactory credit shall make payments of cash in advance, upon delivery or as otherwise specified by Company. Where Customer establishes and maintains satisfactory credit, payments shall be due and payable thirty (30) days from date of invoice. Company reserves the right to revoke or modify Customer's credit at its sole discretion. The Customer's failure to make payment when due is a material breach of this Agreement.

If Customer fails to make any payment when due, in addition to any other rights and remedies available, Company shall have the right, at Company's sole discretion, to stop performing any Services and/or withhold further deliveries of materials, until the account is current. In the event payment is not received when due, Company may, at its discretion, assess late fees at the rate of 1.5% per month or the maximum rate allowed by law. Customer agrees to pay all costs of collection, including without limitation costs, fees, and attorneys' fees. Customer's failure to make payment when due is a material breach of this Agreement until the account is current.

2. Pricing. The pricing set forth in this Agreement is based on the number of devices to be installed and services to be performed as set forth in the Scope of Work ("Equipment" and "Services"). If the actual number of devices installed or services to be performed is greater than that set forth in the Scope of Work, the price will be increased accordingly. If this Agreement extends beyond one year, SimplexGrinnell may increase prices upon notice to the Customer. Customer agrees to pay all taxes, permits, and other charges, including but not limited to state and local sales and excise taxes, however designated, levied or based on the service charges pursuant to this Agreement.

3. Alarm Monitoring Services. Any reference to alarm monitoring services in this Agreement is included for pricing purposes only. Alarm monitoring services are performed pursuant to the terms and conditions of Company's standard alarm monitoring services agreement.

4. Code Compliance. Company does not undertake an obligation to inspect for compliance with laws or regulations unless specifically stated in the Scope of Work. Customer acknowledges that the Authority Having Jurisdiction (e.g. Fire Marshal) may establish additional requirements for compliance with local codes. Any additional services or equipment required will be provided at an additional cost to Customer.

5. Limitation of Liability; Limitations of Remedy. It is understood and agreed by the Customer that Company is not an insurer and that insurance coverage, if any, shall be obtained by the Customer and that amounts payable to company hereunder are based upon the value of the services and the scope of liability set forth in this Agreement and are unrelated to the value of the Customer's property and the property of others located on the premises. Customer agrees to look exclusively to the Customer's insurer to recover for injuries or damage in the event of any loss or injury and that Customer releases and waives all right of recovery against Company arising by way of subrogation. Company makes no guaranty or Warranty, including any implied warranty of merchantability or fitness for a particular purpose that equipment or services supplied by Company will detect or avert occurrences or the consequences therefrom that the equipment or service was designed to detect or avert.

It is impractical and extremely difficult to fix the actual damages, if any, which may proximately result from failure on the part of Company to perform any of its obligations under this Agreement. Accordingly, Customer agrees that, Company shall be exempt from liability for any loss, damage or injury arising directly or indirectly from occurrences, or the consequences therefrom, which the equipment or service was designed to detect or avert. Should Company be found liable for any loss, damage or injury arising from a failure of the equipment or service in any respect, Company's liability shall be limited to an amount equal to the Agreement price (as increased by the price for any additional work) or where the time and material payment term is selected, Customer's time and material payments to Company. Where this Agreement covers multiple sites, liability shall be limited to the amount of the payments allocable to the site where the incident occurred. Such sum shall be complete and exclusive. If Customer desires Company to assume greater liability, the parties shall amend this Agreement by attaching a rider setting forth the amount of additional liability and the additional amount payable by the Customer for the assumption by Company of such greater liability, provided however that such rider shall in no way be interpreted to hold Company as an insurer. IN NO EVENT SHALL COMPANY BE LIABLE FOR ANY DAMAGE, LOSS, INJURY, OR ANY OTHER CLAIM ARISING FROM ANY SERVICING, ALTERATIONS, MODIFICATIONS, CHANGES, OR MOVEMENTS OF THE COVERED SYSTEM(S) OR ANY OF ITS COMPONENT PARTS BY THE CUSTOMER OR ANY THIRD PARTY. COMPANY SHALL NOT BE LIABLE FOR INDIRECT, INCIDENTAL OR CONSEQUENTIAL DAMAGES OF ANY KIND, INCLUDING BUT NOT LIMITED TO DAMAGES ARISING FROM THE USE, LOSS OF THE USE, PERFORMANCE, OR FAILURE OF THE COVERED SYSTEM(S) TO PERFORM. The limitations of liability set forth in this Agreement shall inure to the benefit of all parents, subsidiaries and affiliates of company, whether direct or indirect, company's employees, agents, officers and directors.

6. Reciprocal Waiver of Claims (SAFETY Act). Certain of SimplexGrinnell's systems and services have received Certification and/or Designation as Qualified Anti-Terrorism Technologies ("QATT") under the Support Anti-terrorism by Fostering Effective Technologies Act of 2002, 6 U.S.C. §§ 441-444 (the "SAFETY Act"). As required under 6 C.F.R. 25.5 (e), to the maximum extent permitted by law, SimplexGrinnell and Customer hereby agree to waive their right to make any claims against the other for any losses, including business interruption losses, sustained by either party or their respective employees, resulting from an activity resulting from an "Act of Terrorism" as defined in 6 C.F.R. 25.2, when QATT have been deployed in defense against, response to, or recovery from such Act of Terrorism.

7. General Provisions. Customer has selected the service level desired after considering and balancing various levels of protection afforded, and their related costs. Customer acknowledges and agrees that by this Agreement, Company, unless specifically stated, does not undertake any obligation to maintain or render Customer's system or equipment as Year 2000 compliant, which shall mean, capable of correctly handling the processing of calendar dates before or after December 31, 1999. All work to be performed by Company will be performed during normal working hours of normal working days (8:00 a.m. – 5:00 p.m., Monday through Friday, excluding Company holidays), as defined by Company, unless additional times are specifically described in this Agreement.

Company will perform the services described in the Scope of Work section ("Services") for one or more system(s) or equipment as described in the Scope of Work section or the listed attachments ("Covered System(s)").

The Customer shall promptly notify Company of any malfunction in the Covered System(s) which comes to Customer's attention. This Agreement assumes the Covered System(s) are in operational and maintainable condition as of the Agreement date. If, upon initial inspection, Company determines that repairs are recommended, repair charges will be submitted for approval prior to any work. Should such repair work be declined Company shall be relieved from any and all liability arising therefrom. UNLESS OTHERWISE SPECIFIED IN THIS AGREEMENT, ANY INSPECTION (AND, IF SPECIFIED, TESTING) PROVIDED UNDER THIS AGREEMENT DOES NOT INCLUDE ANY MAINTENANCE, REPAIRS, ALTERATIONS, REPLACEMENT OF PARTS, OR ANY FIELD ADJUSTMENTS WHATSOEVER, NOR DOES IT INCLUDE THE CORRECTION OF ANY DEFICIENCIES IDENTIFIED BY COMPANY TO CUSTOMER. COMPANY SHALL NOT BE RESPONSIBLE FOR EQUIPMENT FAILURE OCCURRING WHILE COMPANY IS IN THE PROCESS OF FOLLOWING ITS INSPECTION TECHNIQUES, WHERE THE FAILURE ALSO RESULTS FROM THE AGE OR OBSOLESCENCE OF THE ITEM OR DUE TO NORMAL WEAR AND TEAR. THIS AGREEMENT DOES NOT COVER SYSTEMS, EQUIPMENT, COMPONENTS OR PARTS THAT ARE BELOW GRADE, BEHIND WALLS OR OTHER OBSTRUCTIONS OR EXTERIOR TO THE BUILDING, ELECTRICAL WIRING, AND PIPING.

8. Customer Responsibilities. Customer shall furnish all necessary facilities for performance of its work by Company, adequate space for storage and handling of materials, light, water, heat, heat tracing, electrical service, local telephone, watchman, and crane and elevator service and necessary permits. Where wet pipe system is installed, Customer shall supply and maintain sufficient heat to prevent freezing of the system. Customer shall promptly notify Company of any malfunction in the Covered System(s) which comes to Customer's attention. This Agreement assumes any existing system(s) are in operational and maintainable condition as of the Agreement date. If, upon initial inspection, Company determines that repairs are recommended, repair charges will be submitted for approval prior to any work. Should such repair work be declined Company shall be relieved from any and all liability arising therefrom.

Customer shall further:

- supply required schematics and drawings unless they are to be supplied by Company in accordance with this Agreement;
- Provide a safe work environment, in the event of an emergency or Covered System(s) failure, take reasonable safety precautions to protect against personal injury, death, and property damage, continue such measures until the Covered System(s) are operational, and notify Company as soon as possible under the circumstances.
- Provide Company access to any system(s) to be serviced,
- Comply with all laws, codes, and regulations pertaining to the equipment and/or services provided under this agreement.

9. Excavation. In the event the Work includes excavation, Customer shall pay, as an extra to the contract price, the cost of any additional work performed by Company dues to water, quicksand, rock or other unforeseen condition or obstruction encountered or shoring required.

10. Structure and Site Conditions. While employees of Company will exercise reasonable care in this respect, Company shall be under not responsibility for loss or damage due to the character, condition or use of foundations, walls, or other structures not erected by it or resulting from the excavation in proximity thereto, or for damage resulting from concealed piping, wiring, fixtures, or other equipment or condition of water pressure. All shoring or protection of

SALE AND INSTALLATION AGREEMENT

(continued)

foundation, walls or other structures subject to being disturbed by any excavation required hereunder shall be the responsibility of Customer. Customer shall have all things in readiness for installation including, without limitation, structure to support the sprinkler system and related equipment (including tanks), other materials, floor or suitable working base, connections and facilities for erection at the time the materials are delivered. In the event Customer fails to have all things in readiness at the time scheduled for receipt of materials, Customer shall reimburse Company for all expenses caused by such failure. Failure to make areas available to Company during performance in accordance with schedules that are the basis for Company's proposal shall be considered a failure to have things in readiness in accordance with the terms of this Agreement.

11. Confined Space. If access to confined space by Company is required for the performance of Services, Services shall be scheduled and performed in accordance with Company's then-current hourly rate.

12. Hazardous Materials. Customer represents that, except to the extent that Company has been given written notice of the following hazards prior to the execution of this Agreement, to the best of Customer's knowledge there is no:

- "permit confined space," as defined by OSHA,
- risk of infectious disease,
- need for air monitoring, respiratory protection, or other medical risk,
- asbestos, asbestos-containing material, formaldehyde or other potentially toxic or otherwise hazardous material contained in or on the surface of the floors, walls, ceilings, insulation or other structural components of the area of any building where work is required to be performed under this Agreement.

All of the above are hereinafter referred to as "Hazardous Conditions".

Company shall have the right to rely on the representations listed above. If hazardous conditions are encountered by Company during the course of Company's work, the discovery of such materials shall constitute an event beyond Company's control and Company shall have no obligation to further perform in the area where the hazardous conditions exist until the area has been made safe by Customer as certified in writing by an independent testing agency, and Customer shall pay disruption expenses and re-mobilization expenses as determined by Company.

This Agreement does not provide for the cost of capture, containment or disposal of any hazardous waste materials, or hazardous materials, encountered in any of the Covered System(s) and/or during performance of the Services. Said materials shall at all times remain the responsibility and property of Customer. Company shall not be responsible for the testing, removal or disposal of such hazardous materials.

13. OSHA Compliance. Customer shall indemnify and hold Company harmless from and against any and all claims, demands and/or damages arising in whole or in part from the enforcement of the Occupational Safety Health Act (and any amendments or changes thereto) unless said claims, demands or damages are a direct result of causes within the exclusive control of Company.

14. Interferences. Customer shall be responsible to coordinate the work of other trades (including but not limited to ducting, piping, and electrical) and for and additional costs incurred by Company arising out of interferences to Company's work caused by other trades.

15. Modifications and Substitutions. Company reserves the right to modify materials, including substituting materials of later design, providing that such modifications or substitutions will not materially affect the performance of the Covered System(s).

16. Changes, Alterations, Additions. Changes, alterations and additions to the Scope of Work, plans, specifications or construction schedule shall be invalid unless approved in writing by Company. Should changes be approved by Company, that increase or decrease the cost of the work to Company, the parties shall agree, in writing, to the change in price prior to performance of any work. However, if no agreement is reached prior to the time for performance of said work, and Company elects to perform said work so as to avoid delays, then Company's estimate as to the value of said work shall be deemed accepted by Customer. In addition, Customer shall pay for all extra work requested by Customer or made necessary because of incompleteness or inaccuracy of plans or other information submitted by Customer with respect to the location, type of occupancy, or other details of the work to be performed. In the event the layout of Customer's facilities has been altered, or is altered by Customer prior to the completion of the Work, Customer shall advise Company, and prices, delivery and completion dates shall be changed by Company as may be required.

17. Commodities Availability. Company shall not be responsible for failure to provide services, deliver products, or otherwise perform work required by this Agreement due to lack of available steel products or products made from plastics or other commodities. 1) In the event Company is unable, after reasonable commercial efforts, to acquire and provide steel products, or products made from plastics or other commodities, if required to perform work required by this Agreement, Customer hereby agrees that Company may terminate the Agreement, or the relevant portion of the Agreement, at no additional cost and without penalty. Customer agrees to pay Company in full for all work performed up to the time of any such termination. 2) If Company is able to obtain the steel products or products made from plastics or other commodities, but the price of any of the products has risen by more than 10% from the date of the bid, proposal or date Company executed this Agreement, whichever occurred first, then Company may pass through that increase through a reasonable price increase to reflect increased cost of materials.

18. Project Claims. Any claim of failure to perform against Company arising hereunder shall be deemed waived unless received by Company, in writing specifically setting forth the basis for such claim, within ten (10) days after such claims arises.

19. Backcharges. No charges shall be levied against the Seller unless seventy-two (72) hours prior written notice is given to Company to correct any alleged deficiencies which are alleged to necessitate such charges and unless such alleged deficiencies are solely and directly caused by Company.

20. System Equipment. The purchase of equipment or peripheral devices (including but not limited to smoke detectors, passive infrared detectors, card readers, sprinkler system components, extinguishers and hoses) from Company shall be subject to the terms and conditions of this Agreement. If, in Company's sole judgment, any peripheral device or other system equipment, which is attached to the Covered System(s), whether provided by Company or a third party, interferes with the proper operation of the Covered System(s), Customer shall remove or replace such device or equipment promptly upon notice from Company. Failure of Customer to remove or replace the device shall constitute a material breach of this Agreement. If Customer adds any third party device or equipment to the Covered System(s), Company shall not be responsible for any damage to or failure of the Covered System(s) caused in whole or in part by such device or equipment.

21. Reports. Where inspection and/or test services are selected, such inspection and/or test shall be completed on Company's then current Report form, which shall be given to Customer, and, where applicable, Company may submit a copy thereof to the local authority having jurisdiction. The Report and recommendations by Company are only advisory in nature and are intended to assist Customer in reducing the risk of loss to property by indicating obvious defects or impairments noted to the system and equipment inspected and/or tested. They are not intended to imply that no other defects or hazards exist or that all aspects of the Covered System(s), equipment, and components are under control at the time of inspection. Final responsibility for the condition and operation of the Covered System(s) and equipment and components lies with Customer.

22. Limited Warranty. Subject to the limitations below, Company warrants any equipment (as distinguished from the Software) installed pursuant to this Agreement to be free from defects in material and workmanship under normal use for a period of one (1) year from the date of first beneficial us or all or any part of the Covered System(s) or 18 months after Equipment shipments, whichever is earlier, provided however, that Company's soles liability, and Customer's sole remedy, under this limited warranty shall be limited to the repair or replacement of the Equipment or any part thereof, which Company determines is defective, at Company's sole option and subject to the availability of service personnel and parts, as determined by Company. Company warrants expendable items, including, but not limited to, video and print heads, television camera tubes, video monitor displays tubes, batteries and certain other products in accordance with the applicable manufacturer's warranty. Company does not warrant devices designed to fail in protecting the System, such as, but not limited to, fuses and circuit breakers.

Company warrants that any Company software described in this Agreement, as well as software contained in or sold as part of any Equipment described in this Agreement, will reasonably conform to its published specifications in effect at the time of delivery and for ninety (90) days after delivery. However, Customer agrees and acknowledges that the software may have inherent defects because of its complexity. Company's sole obligation with respect to software, and Customer's sole remedy, shall be to make available published modifications, designed to correct inherent defects, which become available during the warranty period.

If Repair Services are included in this Agreement, Company warrants that its workmanship and material for repairs made pursuant to this Agreement will be free from defects for a period of ninety (90) days from the date of furnishing.

EXCEPT AS EXPRESSLY SET FORTH HEREIN, COMPANY DISCLAIMS ALL WARRANTIES, EXPRESS OR IMPLIED, INCLUDING BUT NOT LIMITED TO ANY IMPLIED WARRANTIES OF MERCHANTABILITY OR FITNESS FOR A PARTICULAR PURPOSE WITH RESPECT TO THE SERVICES PERFORMED OR THE PRODUCTS, SYSTEMS OR EQUIPMENT, IF ANY, SUPPORTED HEREUNDER. COMPANY MAKES NO WARRANTY OR REPRESENTATION, AND UNDERTAKES NO OBLIGATION TO ENSURE BY THE SERVICES PERFORMED UNDER THIS AGREEMENT, THAT COMPANY'S PRODUCTS OR THE SYSTEMS OR EQUIPMENT OF THE CUSTOMER WILL CORRECTLY HANDLE THE PROCESSING OF CALENDAR DATES BEFORE OR AFTER DECEMBER 31, 1999.

Warranty service will be performed during Company's normal working hours. If Customer requests warranty service at other than normal working hours, service will be performed at Company's then current rates for after ours services. All repairs or adjustments that are or may become necessary shall be performed by and authorized representative of Company. Any repairs, adjustments or interconnections performed by Customer or any third party shall void all warranties.

23. Indemnity. Customer agrees to indemnify, hold harmless and defend Company against any and all losses, damages, costs, including expert fees and costs, and expenses including reasonable defense costs, arising from any and all third party claims for personal injury, death, property damage or economic loss, including specifically any damages resulting from the exposure of workers to Hazardous Conditions whether or not Customer pre-notifies Company of the existence of said hazardous conditions, arising in any way from any act or omission of Customer or Company relating in any way to this Agreement, including but not limited to the Services under this Agreement, whether such claims are based upon contract, warranty, tort (including but not limited to active or passive negligence), strict liability or otherwise. Company reserves the right to select counsel to represent it in any such action.

24. Insurance. Customer shall name Company, its officers, employees, agents, subcontractors, suppliers, and

SALE AND INSTALLATION AGREEMENT

(continued)

representatives as additional insureds on Customer's general liability and auto liability policies.

25. Termination. Any termination under the terms of this Agreement shall be made in writing. In the event Customer terminates this Agreement prior to completion for any reason not arising solely from Company's performance or failure to perform, Customer understands and agrees that Company will incur costs of administration and preparation that are difficult to estimate or determine. Accordingly, should Customer terminate this Agreement as described above, Customer agrees to pay all charges incurred for products and equipment installed and services performed, and in addition pay an amount equal to twenty (20%) percent of the price of products and equipment not yet delivered and Services not yet performed, return all products and equipment delivered and pay a restocking fee of twenty (20%) percent the price of products or equipment returned.

Company may terminate this Agreement immediately at its sole discretion upon the occurrence of any Event of Default as hereinafter defined. Company may also terminate this Agreement at its sole discretion upon notice to Customer if Company's performance of its obligations under this Agreement becomes impracticable due to obsolescence of equipment at Customer's premises or unavailability of parts.

26. No Option to Solicit. Customer shall not, directly or indirectly, on its own behalf or on behalf of any other person, business, corporation or entity, solicit or employ any Company employee, or induce any Company employee to leave his or her employment with Company, for a period of two years after the termination of this Agreement.

27. Default. An Event of Default shall be 1) failure of the Customer to pay any amount within ten (10) days after the amount is due and payable, 2) abuse of the System or the Equipment, 3) dissolution, termination, discontinuance, insolvency or business failure of Customer. Upon the occurrence of an Event of Default, Company may pursue one or more of the following remedies, 1) discontinue furnishing Services, 2) by written notice to Customer declare the balance of unpaid amounts due and to become due under the this Agreement to be immediately due and payable, provided that all past due amounts shall bear interest at the rate of 1 ½% per month (18% per year) or the highest amount permitted by law, 3) receive immediate possession of any equipment for which Customer has not paid. 4) proceed at law or equity to enforce performance by Customer or recover damages for breach of this Agreement, and 5) recover all costs and expenses, including without limitation reasonable attorneys' fees, in connection with enforcing or attempting to enforce this Agreement.

28. Exclusions. Unless expressly included in the Scope of Work, this Agreement expressly excludes, without limitation, testing inspection and repair of duct detectors, beam detectors, and UV/IR equipment; provision of fire watches; clearing of ice blockage; draining of improperly pitched piping; replacement of batteries; recharging of chemical suppression systems; reloading of, upgrading, and maintaining computer software; system upgrades and the replacement of obsolete systems, equipment, components or parts; making repairs or replacements necessitated by reason of negligence or misuse of components or equipment or changes to Customer's premises, vandalism, corrosion (including but not limited to micro-bacterially induced corrosion ("MIC")), power failure, current fluctuation, failure due to non-Company installation, lightning, electrical storm, or other severe weather, water, accident, fire, acts of God or any other cause external to the Covered System(s). Repair Services provided pursuant to this Agreement do not cover and specifically excludes system upgrades and the replacement of obsolete systems, equipment, components or parts. All such services may be provided by Company at Company's sole discretion at an additional charge. If Emergency Services are expressly included in the scope of work section, the Agreement price does not include travel expenses.

29. Force Majeure; Delays. Company shall not be liable for any damage or penalty for delays or failure to perform work due to acts of God, acts or omissions of Customer, acts of civil or military authorities, Government regulations or priorities, fires, epidemics, quarantine, restrictions, war, riots, civil disobedience or unrest, strikes, delays in transportation, vehicle shortages, differences with workmen, inability to obtain necessary labor, material or manufacturing facilities, defaults of Company's subcontractors, failure or delay in furnishing compete information by Customer with respect to location or other details of work to be performed, impossibility or impracticability of performance or any other cause or causes beyond Company's control, whether or not similar to the foregoing. In the event of any delay caused as aforesaid, completion shall be extended for a period equal to any such delay, and this contract shall not be void or voidable as a result of the delay. In the event work is temporarily discontinued by any of the foregoing, all unpaid installments of the contract price, les an amount equal to the value of material and labor not furnished, shall be due and payable upon receipt of invoice by Customer.

30. One-Year Limitation on Actions; Choice of Law. It is agreed that no suit, or cause of action or other proceeding shall be brought against either party more than one (1) year after the accrual of the cause of action or one (1) year after the claim arises, whichever is shorter, whether known or unknown when the claim arises or whether based on tort, contract, or any other legal theory. The laws of Massachusetts shall govern the validity, enforceability, and interpretation of this Agreement.

31. Assignment. Customer may not assign this Agreement without Company's prior written consent. Company may assign this Agreement to an affiliate without obtaining Customer's consent.

32. Entire Agreement. The parties intend this Agreement, together with any attachments or Riders (collectively he "Agreement) to be the final, complete and exclusive expression of their Agreement and the terms and conditions thereof. This Agreement supersedes all prior representations, understandings or agreements between the parties, written or oral, and shall constitute the sole terms and conditions of sale for all equipment and services. No waiver, change, or modification of any terms or conditions of this Agreement shall be binding on Company unless made in writing and signed by an Authorized Representative of Company.

33. Severability. If any provision of this Agreement is held by any court or other competent authority to be void or unenforceable in whole or in part, this Agreement will continue to be valid as to the other provisions and the remainder of the affected provision.

34. Legal Fees. Company shall be entitled to recover from the customer all reasonable legal fees incurred in connection with Company enforcing the terms and conditions of this Agreement.

35. License Information (Security System Customers): AL Alabama Electronic Security Board of Licensure 7956 Vaughn Road, Pmb 392, Montgomery, Alabama 36116 (334) 264-9388: AR Regulated by: Arkansas Board of Private Investigators And Private Security Agencies, #1 State Police Plaza Drive, Little Rock 72209 (501)618-8600: CA Alarm company operators are licensed and regulated by the Bureau of Security and Investigative Services, Department of Consumer Affairs, Sacramento, Ca, 95814. Upon completion of the installation of the alarm system, the alarm company shall thoroughly instruct the purchaser in the proper use of the alarm system. Failure by the licensee, without legal excuse, to substantially commence work within 20 days from the approximate date specified in the agreement when the work will begin is a violation of the Alarm Company Act: NY Licensed by N.Y.S. Department of the State: TX Texas Commission on Private Security, 5805 N. Lamar Blvd., Austin, 78752-4422, 512-424-7710. License numbers available at www.simplexgrinnell.com or contact your local SimplexGrinnell office.

(Rev. 10/08)

©2006-8 SimplexGrinnell LP. All rights reserved.

IMPORTANT NOTICE TO CUSTOMER

In accepting this Proposal, Customer agrees to the terms and conditions contained herein including those on the following pages of this Agreement and any attachments or riders attached hereto that contain additional terms and conditions. It is understood that these terms and conditions shall prevail over any variation in terms and conditionson any purchase order or other document that the Customer may issue. Any changes in the system requested by the Customer after the execution of this Agreement shall be paid for by the Customer and such changes shall be authorized in writing. **ATTENTION IS DIRECTED TO THE LIMITATION OF LIABILITY, WARRANTY, INDEMNITY AND OTHER CONDITIONS ON THE FOLLOWING PAGES. This Proposal shall be void if not accepted in writing within thirty (30) days from the date of the Proposal.**

Offered By: SimplexGrinnell LP License#: 80 Clark Dr 5d East Berlin, CT 06023 Telephone: (860) 438-3200 Representative: _____	Accepted By: (Customer) Company: _____ Address: _____ Signature: _____ Title: _____ P.O.#: _____ Date: _____

SimplexGrinnell
BE SAFE.

80 Clark Dr 5d
East Berlin, CT 06023
(860) 438-3200
FAX: (860) 438-3259
www.simplexgrinnell.com

SimplexGrinnell Quotation

TO:
SimplexGrinnell - 129 Hartford
80 Clark Dr Unit 5-D
East Berlin, CT 06023-1103

Project: SCSU Prkg. Garage - Bid #2
Customer Reference:
SimplexGrinnell Reference: 129417297
Date: 06/04/2010

SimplexGrinnell is pleased to offer for your consideration this quotation for the above project.

Comments
Please read the notes below and call if you have any questions.

Contact Information:
Sherri McKirdy
Electronic System Sales Representative
860-438-3200 x163
scmkirdy@simplexgrinnell.com <mailto:scmkirdy@simplexgrinnell.com>
SimplexGrinnell, LP
80 Clark Drive, Unit 5d
East Berlin, CT 06023

SimplexGrinnell's Scope of Work:

* Bid #2 *
SimplexGrinnell to provide equipment, installation, programming and testing for SCSU New (1200 car) Parking Garage - Bid #2.
(There are 29 extra speaker strobes on Bid #2).

Quote based on prevailing wage and CT State Contract Pricing # 98PSX0023.

Per Plans and Specs dated 7/10/09 by BL Companies.

Devices:
Speaker strobes, weatherproof: 29

Quote includes all new wiring and conduit, wiring terminations, graphics update, download to network, and test & recert.

Also included:
- Patching
- Firestopping our penetrations.

Permit not included.

SimplexGrinnell Quotation

Comments (continued)

Security portion of this project (cameras and Code Blue) is not included in this quote.

Respectfully,
Sherri McKirdy

I
THIS PROPOSAL IS BASED UPON ONLY THOSE ITEMS DENOTED BY [X]":

[] Specification section:
[X] Information from plans Drawing Numbers and Dates: 7/10/09
[] Up to and including addendum:
[] Customer provided bill of material
[] Verbal request
[] Value engineering
[] Design Build

THIS QUOTATION INCLUDES ONLY THOSE ITEMS DENOTED BY "[X]":

[X] Equipment as listed
[] Demolition of existing devices as indicated on specs/drawings.
[] CT State Sales Tax
[X] Freight (F.O.B. shipping point)
[X] Submittal and Risers
[] PE Sealed Drawings
[X] Panel terminations
[] Technical installation support including programming
[] Permit
[] Inspection Fees
[] Payment/Performance Bonds
[X] 1 functional system certification test
[X] 1 AHJ test
[X] 1 10% Re-Test
[X] 1 Separate Elevator Test
[] 2 Hours of operation and maintenance training
[X] Close out documentation
[] Interface to non-SimplexGrinnell provided equipment i.e.: HVAC and elevator
[X] One year standard warranty
[] Monitoring
[] AHCA Inspection

THIS QUOTATION DOES NOT INCLUDE THE FOLLOWING:

Phased Checkout
Raceway or standard electric boxes
120vac power
Fire protection switches or gas solenoids

SimplexGrinnell Quotation

Comments (continued)

Phone lines
Remote station monitoring contract (available upon request)
Knox box
Cutting, drilling, patching, fire caulking or painting
Interface to non-SimplexGrinnell provided equipment i.e.: HVAC and elevator
Fire watch
Weatherproof and conditioned control equipment housing
No asbestos abatement is identified, expected or included in this contract. All policies and procedures referenced in the specification will be followed as required.
No Lead paint abatement is identified, expected or included in this contract. All policies and procedures referenced in the specification will be followed as required.
Cost for CAD files

It is SimplexGrinnell's (SG) understanding that these drawings and specifications represent the work to be accomplished in its entirety and no additional work or materials is expected or required. This quote covers direct costs only and we reserve the right to claim for impact and consequential costs.

SCHEDULE MILESTONES:

Configured Submittals and Shop-drawings: **14 Days** to develop upon Receipt of P.O
Fab and Delivery of Equipment- non standard Equipment/BackBoxes: **21 Days**
Fab and Delivery of Equipment- Field Devices: **7 Days**
Fab and Delivery of Panels/Transponders: **14 Days**
Electrical Contractor Mechanically/Electrically complete **-14 days** from project completion to Commission System.
TIME IS OF THE ESSENCE with regard to this quotation as it relates to the project schedule which is **[ ]** known **[X]** unknown at this time.

ADDITIONAL NOTES:

If SimplexGrinnell is awarded this project we will need:

- A complete set of bid documents including all specifications and any addendums
- An electronic CAD file in AutoCAD shall be sent to smckirdy@simplexgrinnell.com <mailto:smckirdy@simplexgrinnell.com> or mailed to the branch address provided on this quotation.
- A complete schedule
- A copy of the "Notice of Commitment"
- Your P.O. or contract will need to reference this proposal # and amount. This proposal and its terms and condition shall take precedence. Your Purchase Order or contact is subject to review and must be mutually agreeable.

Quotation is valid for a period of 30 days ONLY unless modified in writing by SimplexGrinnell.

SimplexGrinnell Quotation

Comments (continued)

All work is to be performed during normal SimplexGrinnell hours of 8am to 5pm Monday through Friday with the exception of company sponsored holidays unless specifically noted otherwise. We reserve the right to correct this quote for errors and omissions.

As stated above, SimplexGrinnell will perform the work pursuant to the attached Terms and Conditions. Should the parties fail to execute a mutually agreeable definitive agreement, all work performed by SimplexGrinnell on or related to the above captioned project (with the exception of any monitoring services anticipated, which will only be performed pursuant to the unaltered terms and conditions of SimplexGrinnell's standard Monitoring Agreement) will be performed pursuant to the attached Terms and Conditions.

Please indicate your approval of this quotation by signing the last page and returning to my attention as noted below.

Respectfully,

Sherri McKirdy
Electronic Systems Sales
Phone: (860)438-3200 x163
Cell: (860)338-1378
Fax: (860)438-3259
Email: smckirdy@simplexgrinnell.com <mailto:smckirdy@simplexgrinnell.com>
AA/EOE

QUANTITY	MODEL NUMBER	DESCRIPTION
	SCSU Prkg. Garage - Bid #2	
	SCSU Prkg. Garage - Bid #2	
29	ET70WP-24185W-FR	185CD,WEATHERPROOF,WALL,RED
29	IOB-R	INDOOR/OUTDOOR SURFACE BACKBOX
1	DPFA	Misc. material
	Bid #2 - FA Installation	
	Bid #2 - FA Installation	
	Bid #2 - FA Support Labor	
	Bid #2 - FA Support Labor	

Total net selling price, FOB shipping point, $24,107.00

TERMS AND CONDITIONS

1. Payment. Payments shall be invoiced and due in accordance with the terms and conditions set forth above. Work performed on a time and material basis shall be at the then-prevailing Company rate for material, labor, and related items, in effect at the time supplied under this Agreement. Company shall invoice Customer for progress payments to one hundred (100%) percent based upon equipment delivered or stored, and services performed. Customers without established satisfactory credit shall make payments of cash in advance, upon delivery or as otherwise specified by Company. Where Customer establishes and maintains satisfactory credit, payments shall be due and payable thirty (30) days from date of invoice. Company reserves the right to revoke or modify Customer's credit at its sole discretion. The Customer's failure to make payment when due is a material breach of this Agreement.

If Customer fails to make any payment when due, in addition to any other rights and remedies available, Company shall have the right, at Company's sole discretion, to stop performing any Services and/or withhold further deliveries of materials, until the account is current. In the event payment is not received when due, Company may, at its discretion, assess late fees at the rate of 1.5% per month or the maximum rate allowed by law. Customer agrees to pay all costs of collection, including without limitation costs, fees, and attorneys' fees. Customer's failure to make payment when due is a material breach of this Agreement until the account is current.

2. Pricing. The pricing set forth in this Agreement is based on the number of devices to be installed and services to be performed as set forth in the Scope of Work ("Equipment" and "Services"). If the actual number of devices installed or services to be performed is greater than that set forth in the Scope of Work, the price will be increased accordingly. If this Agreement extends beyond one year, SimplexGrinnell may increase prices upon notice to the Customer. Customer agrees to pay all taxes, permits, and other charges, including but not limited to state and local sales and excise taxes, however designated, levied or based on the service charges pursuant to this Agreement.

3. Alarm Monitoring Services. Any reference to alarm monitoring services in this Agreement is included for pricing purposes only. Alarm monitoring services are performed pursuant to the terms and conditions of Company's standard alarm monitoring services agreement.

4. Code Compliance. Company does not undertake an obligation to inspect for compliance with laws or regulations unless specifically stated in the Scope of Work. Customer acknowledges that the Authority Having Jurisdiction (e.g. Fire Marshal) may establish additional requirements for compliance with local codes. Any additional services or equipment required will be provided at an additional cost to Customer.

5. Limitation of Liability; Limitations of Remedy. It is understood and agreed by the Customer that Company is not an insurer and that insurance coverage, if any, shall be obtained by the Customer and that amounts payable to company hereunder are based upon the value of the services and the scope of liability set forth in this Agreement and are unrelated to the value of the Customer's property and the property of others located on the premises. Customer agrees to look exclusively to the Customer's insurer to recover for injuries or damage in the event of any loss or injury and that Customer releases and waives all right of recovery against Company arising by way of subrogation. Company makes no guaranty or Warranty, including any implied warranty of merchantability or fitness for a particular purpose that equipment or services supplied by Company will detect or avert occurrences or the consequences therefrom that the equipment or service was designed to detect or avert.

It is impractical and extremely difficult to fix the actual damages, if any, which may proximately result from failure on the part of Company to perform any of its obligations under this Agreement. Accordingly, Customer agrees that, Company shall be exempt from liability for any loss, damage or injury arising directly or indirectly from occurrences, or the consequences therefrom, which the equipment or service was designed to detect or avert. Should Company be found liable for any loss, damage or injury arising from a failure of the equipment or service in any respect, Company's liability shall be limited to an amount equal to the Agreement price (as increased by the price for any additional work) or where the time and material payment term is selected, Customer's time and material payments to Company. Where this Agreement covers multiple sites, liability shall be limited to the amount of the payments allocable to the site where the incident occurred. Such sum shall be complete and exclusive. If Customer desires Company to assume greater liability, the parties shall amend this Agreement by attaching a rider setting forth the amount of additional liability and the additional amount payable by the Customer for the assumption by Company of such greater liability, provided however that such rider shall in no way be interpreted to hold Company as an insurer. IN NO EVENT SHALL COMPANY BE LIABLE FOR ANY DAMAGE, LOSS, INJURY, OR ANY OTHER CLAIM ARISING FROM ANY SERVICING, ALTERATIONS, MODIFICATIONS, CHANGES, OR MOVEMENTS OF THE COVERED SYSTEM(S) OR ANY OF ITS COMPONENT PARTS BY THE CUSTOMER OR ANY THIRD PARTY. COMPANY SHALL NOT BE LIABLE FOR INDIRECT, INCIDENTAL OR CONSEQUENTIAL DAMAGES OF ANY KIND, INCLUDING BUT NOT LIMITED TO DAMAGES ARISING FROM THE USE, LOSS OF THE USE, PERFORMANCE, OR FAILURE OF THE COVERED SYSTEM(S) TO PERFORM. The limitations of liability set forth in this Agreement shall inure to the benefit of all parents, subsidiaries and affiliates of company, whether direct or indirect, company's employees, agents, officers and directors.

6. Reciprocal Waiver of Claims (SAFETY Act). Certain of SimplexGrinnell's systems and services have received Certification and/or Designation as Qualified Anti-Terrorism Technologies ("QATT") under the Support Anti-terrorism by Fostering Effective Technologies Act of 2002, 6 U.S.C. §§ 441-444 (the "SAFETY Act"). As required under 6 C.F.R. 25.5 (e), to the maximum extent permitted by law, SimplexGrinnell and Customer hereby agree to waive their right to make any claims against the other for any losses, including business interruption losses, sustained by either party or their respective employees, resulting from an activity resulting from an "Act of Terrorism" as defined in 6 C.F.R. 25.2, when QATT have been deployed in defense against, response to, or recovery from such Act of Terrorism.

7. General Provisions. Customer has selected the service level desired after considering and balancing various levels of protection afforded, and their related costs. Customer acknowledges and agrees that by this Agreement, Company, unless specifically stated, does not undertake any obligation to maintain or render Customer's system or equipment as Year 2000 compliant, which shall mean, capable of correctly handling the processing of calendar dates before or after December 31, 1999. All work to be performed by Company will be performed during normal working hours of normal working days (8:00 a.m. – 5:00 p.m., Monday through Friday, excluding Company holidays), as defined by Company, unless additional times are specifically described in this Agreement.

Company will perform the services described in the Scope of Work section ("Services") for one or more system(s) or equipment as described in the Scope of Work section or the listed attachments ("Covered System(s)").

The Customer shall promptly notify Company of any malfunction in the Covered System(s) which comes to Customer's attention. This Agreement assumes the Covered System(s) are in operational and maintainable condition as of the Agreement date. If, upon initial inspection, Company determines that repairs are recommended, repair charges will be submitted for approval prior to any work. Should such repair work be declined Company shall be relieved from any and all liability arising therefrom. UNLESS OTHERWISE SPECIFIED IN THIS AGREEMENT, ANY INSPECTION (AND, IF SPECIFIED, TESTING) PROVIDED UNDER THIS AGREEMENT DOES NOT INCLUDE ANY MAINTENANCE, REPAIRS, ALTERATIONS, REPLACEMENT OF PARTS, OR ANY FIELD ADJUSTMENTS WHATSOEVER, NOR DOES IT INCLUDE THE CORRECTION OF ANY DEFICIENCIES IDENTIFIED BY COMPANY TO CUSTOMER. COMPANY SHALL NOT BE RESPONSIBLE FOR EQUIPMENT FAILURE OCCURRING WHILE COMPANY IS IN THE PROCESS OF FOLLOWING ITS INSPECTION TECHNIQUES, WHERE THE FAILURE ALSO RESULTS FROM THE AGE OR OBSOLESCENCE OF THE ITEM OR DUE TO NORMAL WEAR AND TEAR. THIS AGREEMENT DOES NOT COVER SYSTEMS, EQUIPMENT, COMPONENTS OR PARTS THAT ARE BELOW GRADE, BEHIND WALLS OR OTHER OBSTRUCTIONS OR EXTERIOR TO THE BUILDING, ELECTRICAL WIRING, AND PIPING.

8. Customer Responsibilities. Customer shall furnish all necessary facilities for performance of its work by Company, adequate space for storage and handling of materials, light, water, heat, heat tracing, electrical service, local telephone, watchman, and crane and elevator service and necessary permits. Where wet pipe system is installed, Customer shall supply and maintain sufficient heat to prevent freezing of the system. Customer shall promptly notify Company of any malfunction in the Covered System(s) which comes to Customer's attention. This Agreement assumes any existing system(s) are in operational and maintainable condition as of the Agreement date. If, upon initial inspection, Company determines that repairs are recommended, repair charges will be submitted for approval prior to any work. Should such repair work be declined Company shall be relieved from any and all liability arising therefrom.

Customer shall further:

- supply required schematics and drawings unless they are to be supplied by Company in accordance with this Agreement;
- Provide a safe work environment, in the event of an emergency or Covered System(s) failure, take reasonable safety precautions to protect against personal injury, death, and property damage, continue such measures until the Covered System(s) are operational, and notify Company as soon as possible under the circumstances.
- Provide Company access to any system(s) to be serviced,
- Comply with all laws, codes, and regulations pertaining to the equipment and/or services provided under this agreement.

9. Excavation. In the event the Work includes excavation, Customer shall pay, as an extra to the contract price, the cost of any additional work performed by Company dues to water, quicksand, rock or other unforeseen condition or obstruction encountered or shoring required.

10. Structure and Site Conditions. While employees of Company will exercise reasonable care in this respect, Company shall be under not responsibility for loss or damage due to the character, condition or use of foundations, walls, or other structures not erected by it or resulting from the excavation in proximity thereto, or for damage resulting from concealed piping, wiring, fixtures, or other equipment or condition of water pressure. All shoring or protection of

SALE AND INSTALLATION AGREEMENT

(continued)

foundation, walls or other structures subject to being disturbed by any excavation required hereunder shall be the responsibility of Customer. Customer shall have all things in readiness for installation including, without limitation, structure to support the sprinkler system and related equipment (including tanks), other materials, floor or suitable working base, connections and facilities for erection at the time the materials are delivered. In the event Customer fails to have all things in readiness at the time scheduled for receipt of materials, Customer shall reimburse Company for all expenses caused by such failure. Failure to make areas available to Company during performance in accordance with schedules that are the basis for Company's proposal shall be considered a failure to have things in readiness in accordance with the terms of this Agreement.

11. Confined Space. If access to confined space by Company is required for the performance of Services, Services shall be scheduled and performed in accordance with Company's then-current hourly rate.

12. Hazardous Materials. Customer represents that, except to the extent that Company has been given written notice of the following hazards prior to the execution of this Agreement, to the best of Customer's knowledge there is no:

- "permit confined space," as defined by OSHA,
- risk of infectious disease,
- need for air monitoring, respiratory protection, or other medical risk,
- asbestos, asbestos-containing material, formaldehyde or other potentially toxic or otherwise hazardous material contained in or on the surface of the floors, walls, ceilings, insulation or other structural components of the area of any building where work is required to be performed under this Agreement.

All of the above are hereinafter referred to as "Hazardous Conditions".

Company shall have the right to rely on the representations listed above. If hazardous conditions are encountered by Company during the course of Company's work, the discovery of such materials shall constitute an event beyond Company's control and Company shall have no obligation to further perform in the area where the hazardous conditions exist until the area has been made safe by Customer as certified in writing by an independent testing agency, and Customer shall pay disruption expenses and re-mobilization expenses as determined by Company.

This Agreement does not provide for the cost of capture, containment or disposal of any hazardous waste materials, or hazardous materials, encountered in any of the Covered System(s) and/or during performance of the Services. Said materials shall at all times remain the responsibility and property of Customer. Company shall not be responsible for the testing, removal or disposal of such hazardous materials.

13. OSHA Compliance. Customer shall indemnify and hold Company harmless from and against any and all claims, demands and/or damages arising in whole or in part from the enforcement of the Occupational Safety Health Act (and any amendments or changes thereto) unless said claims, demands or damages are a direct result of causes within the exclusive control of Company.

14. Interferences. Customer shall be responsible to coordinate the work of other trades (including but not limited to ducting, piping, and electrical) and for and additional costs incurred by Company arising out of interferences to Company's work caused by other trades.

15. Modifications and Substitutions. Company reserves the right to modify materials, including substituting materials of later design, providing that such modifications or substitutions will not materially affect the performance of the Covered System(s).

16. Changes, Alterations, Additions. Changes, alterations and additions to the Scope of Work, plans, specifications or construction schedule shall be invalid unless approved in writing by Company. Should changes be approved by Company, that increase or decrease the cost of the work to Company, the parties shall agree, in writing, to the change in price prior to performance of any work. However, if no agreement is reached prior to the time for performance of said work, and Company elects to perform said work so as to avoid delays, then Company's estimate as to the value of said work shall be deemed accepted by Customer. In addition, Customer shall pay for all extra work requested by Customer or made necessary because of incompleteness or inaccuracy of plans or other information submitted by Customer with respect to the location, type of occupancy, or other details of the work to be performed. In the event the layout of Customer's facilities has been altered, or is altered by Customer prior to the completion of the Work, Customer shall advise Company, and prices, delivery and completion dates shall be changed by Company as may be required.

17. Commodities Availability. Company shall not be responsible for failure to provide services, deliver products, or otherwise perform work required by this Agreement due to lack of available steel products or products made from plastics or other commodities. 1) In the event Company is unable, after reasonable commercial efforts, to acquire and provide steel products, or products made from plastics or other commodities, if required to perform work required by this Agreement, Customer hereby agrees that Company may terminate the Agreement, or the relevant portion of the Agreement, at no additional cost and without penalty. Customer agrees to pay Company in full for all work performed up to the time of any such termination. 2) If Company is able to obtain the steel products or products made from plastics or other commodities, but the price of any of the products has risen by more than 10% from the date of the bid, proposal or date Company executed this Agreement, whichever occurred first, then Company may pass through that increase through a reasonable price increase to reflect increased cost of materials.

18. Project Claims. Any claim of failure to perform against Company arising hereunder shall be deemed waived unless received by Company, in writing specifically setting forth the basis for such claim, within ten (10) days after such claims arises.

19. Backcharges. No charges shall be levied against the Seller unless seventy-two (72) hours prior written notice is given to Company to correct any alleged deficiencies which are alleged to necessitate such charges and unless such alleged deficiencies are solely and directly caused by Company.

20. System Equipment. The purchase of equipment or peripheral devices (including but not limited to smoke detectors, passive infrared detectors, card readers, sprinkler system components, extinguishers and hoses) from Company shall be subject to the terms and conditions of this Agreement. If, in Company's sole judgment, any peripheral device or other system equipment, which is attached to the Covered System(s), whether provided by Company or a third party, interferes with the proper operation of the Covered System(s), Customer shall remove or replace such device or equipment promptly upon notice from Company. Failure of Customer to remove or replace the device shall constitute a material breach of this Agreement. If Customer adds any third party device or equipment to the Covered System(s), Company shall not be responsible for any damage to or failure of the Covered System(s) caused in whole or in part by such device or equipment.

21. Reports. Where inspection and/or test services are selected, such inspection and/or test shall be completed on Company's then current Report form, which shall be given to Customer, and, where applicable, Company may submit a copy thereof to the local authority having jurisdiction. The Report and recommendations by Company are only advisory in nature and are intended to assist Customer in reducing the risk of loss to property by indicating obvious defects or impairments noted to the system and equipment inspected and/or tested. They are not intended to imply that no other defects or hazards exist or that all aspects of the Covered System(s), equipment, and components are under control at the time of inspection. Final responsibility for the condition and operation of the Covered System(s) and equipment and components lies with Customer.

22. Limited Warranty. Subject to the limitations below, Company warrants any equipment (as distinguished from the Software) installed pursuant to this Agreement to be free from defects in material and workmanship under normal use for a period of one (1) year from the date of first beneficial us or all or any part of the Covered System(s) or 18 months after Equipment shipments, whichever is earlier, provided however, that Company's soles liability, and Customer's sole remedy, under this limited warranty shall be limited to the repair or replacement of the Equipment or any part thereof, which Company determines is defective, at Company's sole option and subject to the availability of service personnel and parts, as determined by Company. Company warrants expendable items, including, but not limited to, video and print heads, television camera tubes, video monitor displays tubes, batteries and certain other products in accordance with the applicable manufacturer's warranty. Company does not warrant devices designed to fail in protecting the System, such as, but not limited to, fuses and circuit breakers.

Company warrants that any Company software described in this Agreement, as well as software contained in or sold as part of any Equipment described in this Agreement, will reasonably conform to its published specifications in effect at the time of delivery and for ninety (90) days after delivery. However, Customer agrees and acknowledges that the software may have inherent defects because of its complexity. Company's sole obligation with respect to software, and Customer's sole remedy, shall be to make available published modifications, designed to correct inherent defects, which become available during the warranty period.

If Repair Services are included in this Agreement, Company warrants that its workmanship and material for repairs made pursuant to this Agreement will be free from defects for a period of ninety (90) days from the date of furnishing.

EXCEPT AS EXPRESSLY SET FORTH HEREIN, COMPANY DISCLAIMS ALL WARRANTIES, EXPRESS OR IMPLIED, INCLUDING BUT NOT LIMITED TO ANY IMPLIED WARRANTIES OF MERCHANTABILITY OR FITNESS FOR A PARTICULAR PURPOSE WITH RESPECT TO THE SERVICES PERFORMED OR THE PRODUCTS, SYSTEMS OR EQUIPMENT, IF ANY, SUPPORTED HEREUNDER. COMPANY MAKES NO WARRANTY OR REPRESENTATION, AND UNDERTAKES NO OBLIGATION TO ENSURE BY THE SERVICES PERFORMED UNDER THIS AGREEMENT, THAT COMPANY'S PRODUCTS OR THE SYSTEMS OR EQUIPMENT OF THE CUSTOMER WILL CORRECTLY HANDLE THE PROCESSING OF CALENDAR DATES BEFORE OR AFTER DECEMBER 31, 1999.

Warranty service will be performed during Company's normal working hours. If Customer requests warranty service at other than normal working hours, service will be performed at Company's then current rates for after ours services. All repairs or adjustments that are or may become necessary shall be performed by and authorized representative of Company. Any repairs, adjustments or interconnections performed by Customer or any third party shall void all warranties.

23. Indemnity. Customer agrees to indemnify, hold harmless and defend Company against any and all losses, damages, costs, including expert fees and costs, and expenses including reasonable defense costs, arising from any and all third party claims for personal injury, death, property damage or economic loss, including specifically any damages resulting from the exposure of workers to Hazardous Conditions whether or not Customer pre-notifies Company of the existence of said hazardous conditions, arising in any way from any act or omission of Customer or Company relating in any way to this Agreement, including but not limited to the Services under this Agreement, whether such claims are based upon contract, warranty, tort (including but not limited to active or passive negligence), strict liability or otherwise. Company reserves the right to select counsel to represent it in any such action.

24. Insurance. Customer shall name Company, its officers, employees, agents, subcontractors, suppliers, and

SALE AND INSTALLATION AGREEMENT

(continued)

representatives as additional insureds on Customer's general liability and auto liability policies.

25. Termination. Any termination under the terms of this Agreement shall be made in writing. In the event Customer terminates this Agreement prior to completion for any reason not arising solely from Company's performance or failure to perform, Customer understands and agrees that Company will incur costs of administration and preparation that are difficult to estimate or determine. Accordingly, should Customer terminate this Agreement as described above, Customer agrees to pay all charges incurred for products and equipment installed and services performed, and in addition pay an amount equal to twenty (20%) percent of the price of products and equipment not yet delivered and Services not yet performed, return all products and equipment delivered and pay a restocking fee of twenty (20%) percent the price of products or equipment returned.

Company may terminate this Agreement immediately at its sole discretion upon the occurrence of any Event of Default as hereinafter defined. Company may also terminate this Agreement at its sole discretion upon notice to Customer if Company's performance of its obligations under this Agreement becomes impracticable due to obsolescence of equipment at Customer's premises or unavailability of parts.

26. No Option to Solicit. Customer shall not, directly or indirectly, on its own behalf or on behalf of any other person, business, corporation or entity, solicit or employ any Company employee, or induce any Company employee to leave his or her employment with Company, for a period of two years after the termination of this Agreement.

27. Default. An Event of Default shall be 1) failure of the Customer to pay any amount within ten (10) days after the amount is due and payable, 2) abuse of the System or the Equipment, 3) dissolution, termination, discontinuance, insolvency or business failure of Customer. Upon the occurrence of an Event of Default, Company may pursue one or more of the following remedies, 1) discontinue furnishing Services, 2) by written notice to Customer declare the balance of unpaid amounts due and to become due under the this Agreement to be immediately due and payable, provided that all past due amounts shall bear interest at the rate of 1 ½% per month (18% per year) or the highest amount permitted by law, 3) receive immediate possession of any equipment for which Customer has not paid. 4) proceed at law or equity to enforce performance by Customer or recover damages for breach of this Agreement, and 5) recover all costs and expenses, including without limitation reasonable attorneys' fees, in connection with enforcing or attempting to enforce this Agreement.

28. Exclusions. Unless expressly included in the Scope of Work, this Agreement expressly excludes, without limitation, testing inspection and repair of duct detectors, beam detectors, and UV/IR equipment; provision of fire watches; clearing of ice blockage; draining of improperly pitched piping; replacement of batteries; recharging of chemical suppression systems; reloading of, upgrading, and maintaining computer software; system upgrades and the replacement of obsolete systems, equipment, components or parts; making repairs or replacements necessitated by reason of negligence or misuse of components or equipment or changes to Customer's premises, vandalism, corrosion (including but not limited to micro-bacterially induced corrosion ("MIC")), power failure, current fluctuation, failure due to non-Company installation, lightning, electrical storm, or other severe weather, water, accident, fire, acts of God or any other cause external to the Covered System(s). Repair Services provided pursuant to this Agreement do not cover and specifically excludes system upgrades and the replacement of obsolete systems, equipment, components or parts. All such services may be provided by Company at Company's sole discretion at an additional charge. If Emergency Services are expressly included in the scope of work section, the Agreement price does not include travel expenses.

29. Force Majeure; Delays. Company shall not be liable for any damage or penalty for delays or failure to perform work due to acts of God, acts or omissions of Customer, acts of civil or military authorities, Government regulations or priorities, fires, epidemics, quarantine, restrictions, war, riots, civil disobedience or unrest, strikes, delays in transportation, vehicle shortages, differences with workmen, inability to obtain necessary labor, material or manufacturing facilities, defaults of Company's subcontractors, failure or delay in furnishing compete information by Customer with respect to location or other details of work to be performed, impossibility or impracticability of performance or any other cause or causes beyond Company's control, whether or not similar to the foregoing. In the event of any delay caused as aforesaid, completion shall be extended for a period equal to any such delay, and this contract shall not be void or voidable as a result of the delay. In the event work is temporarily discontinued by any of the foregoing, all unpaid installments of the contract price, les an amount equal to the value of material and labor not furnished, shall be due and payable upon receipt of invoice by Customer.

30. One-Year Limitation on Actions; Choice of Law. It is agreed that no suit, or cause of action or other proceeding shall be brought against either party more than one (1) year after the accrual of the cause of action or one (1) year after the claim arises, whichever is shorter, whether known or unknown when the claim arises or whether based on tort, contract, or any other legal theory. The laws of Massachusetts shall govern the validity, enforceability, and interpretation of this Agreement.

31. Assignment. Customer may not assign this Agreement without Company's prior written consent. Company may assign this Agreement to an affiliate without obtaining Customer's consent.

32. Entire Agreement. The parties intend this Agreement, together with any attachments or Riders (collectively the "Agreement) to be the final, complete and exclusive expression of their Agreement and the terms and conditions thereof. This Agreement supersedes all prior representations, understandings or agreements between the parties, written or oral, and shall constitute the sole terms and conditions of sale for all equipment and services. No waiver, change, or modification of any terms or conditions of this Agreement shall be binding on Company unless made in writing and signed by an Authorized Representative of Company.

33. Severability. If any provision of this Agreement is held by any court or other competent authority to be void or unenforceable in whole or in part, this Agreement will continue to be valid as to the other provisions and the remainder of the affected provision.

34. Legal Fees. Company shall be entitled to recover from the customer all reasonable legal fees incurred in connection with Company enforcing the terms and conditions of this Agreement.

35. License Information (Security System Customers): AL Alabama Electronic Security Board of Licensure 7956 Vaughn Road, Pmb 392, Montgomery, Alabama 36116 (334) 264-9388: AR Regulated by: Arkansas Board of Private Investigators And Private Security Agencies, #1 State Police Plaza Drive, Little Rock 72209 (501)618-8600: CA Alarm company operators are licensed and regulated by the Bureau of Security and Investigative Services, Department of Consumer Affairs, Sacramento, Ca, 95814. Upon completion of the installation of the alarm system, the alarm company shall thoroughly instruct the purchaser in the proper use of the alarm system. Failure by the licensee, without legal excuse, to substantially commence work within 20 days from the approximate date specified in the agreement when the work will begin is a violation of the Alarm Company Act: NY Licensed by N.Y.S. Department of the State: TX Texas Commission on Private Security, 5805 N. Lamar Blvd., Austin, 78752-4422, 512-424-7710. License numbers available at www.simplexgrinnell.com or contact your local SimplexGrinnell office.

(Rev. 10/08)

©2006-8 SimplexGrinnell LP. All rights reserved.

IMPORTANT NOTICE TO CUSTOMER

In accepting this Proposal, Customer agrees to the terms and conditions contained herein including those on the following pages of this Agreement and any attachments or riders attached hereto that contain additional terms and conditions. It is understood that these terms and conditions shall prevail over any variation in terms and conditionson any purchase order or other document that the Customer may issue. Any changes in the system requested by the Customer after the execution of this Agreement shall be paid for by the Customer and such changes shall be authorized in writing. **ATTENTION IS DIRECTED TO THE LIMITATION OF LIABILITY, WARRANTY, INDEMNITY AND OTHER CONDITIONS ON THE FOLLOWING PAGES. This Proposal shall be void if not accepted in writing within thirty (30) days from the date of the Proposal.**

Offered By: SimplexGrinnell LP License#: 80 Clark Dr 5d East Berlin, CT 06023 Telephone: (860) 438-3200 Representative:	Accepted By: (Customer) Company: Address: Signature: Title: P.O.#: Date:

SCSU Lot #7 Parking Garage *5/28/2010*
New Haven, CT
Our Ref #08-018

Estimating Notes & Questions
Based on review of Bid
Documents Dated July 10, 2009

Drawings

1. Drawing MP0.01, Plumbing Fixture Schedule.

   - The specified floor drains Zurn model Z536 and roof drains to be Zurn model Z100.

     These are field installed models and cannot be 'cast-into' the double tees at the factory.

     Commonly floor drains for pretopped double tee parking garages will use a Model Z662 which allows for the 'frame' portion to be cast-into the double tees flange at the factory and the balance of the drain hardware is shipped loose to the jobsite for installation by the plumbing contractor.

     ° Please clarify.

   BL Response: Use of the Zurn Z662 at the parking decks is acceptable. If Supplemental Bid #3 get accepted the Zurn Z100 can be Cast into the Roof tee's on site. Precaster to provide blank out where Drain would go.

Specification Section 034100

1. Page 2, paragraph 1.03, A: Design Requirements.
   - Please confirm that BL Companies will be the Engineer of Record for the project and the precaster is responsible for design of the precast products & connections to support the lateral and gravity loads which will be provided by the EOR.

   BL Response: Your statement is Correct.

2. Page 4, paragraph 1.09: Coordination.
   - Normally we (the precast contractor) would expect to be an active participant in the coordination process as it affects our work; however Coordinating the project is ultimately the responsibility of the General Contractor or Construction Manager (per Section 01310) as we do not have any direct contractual agreement with other sub-contractors on the project.
     Please confirm that our understanding is correct

   BL Response: Coordination is ultimately the responsibility of the General Contractor.

AN EQUAL OPPORTUNITY EMPLOYER M/F

Estimating Notes & Questions
Based on review of Bid
Documents Dated July 10, 2009
continued

3. Page 4, paragraph 2.02 Materials
   - Paragraph 2.02 A. - Calls for grey cement with #25 "Dark Buff" pigment…but it does not define the addition rate for the pigment or which products receive the color pigment.
     It would be unusual for color pigment to be used in ALL of the concrete for a parking garage project.
     - Please define:
       - » What percentage of pigment, by weight, is to be added to the cementitious material?

       BL Response: Pigment weight same as color selected for a previous Blakeslee job (Science Park, in new Haven.)
       - » Which precast products are to receive this color pigmented concrete mix.

       BL Response: Color on only exterior exposed precast concrete spandrels, columns, and wall panels.
   - Paragraph 2.02, D:
     Corrosion Inhibiting Admixture.
     - Please define:
       - » What products are to receive this admixture?

       BL Response: To be provided on all Double Tee's, Inverted Girders, Stairs, and Precast Slabs
       - » How many gallons of admixture per cubic yard of concrete is required?

       BL Response: 2 Gallons per Cubic yard of Concrete.

4. Page 5, paragraph 2.03 Reinforcement
   - Paragraph 2.03 E: states "Where units are exposed to corrosive environment or severe exposure conditions, provide 2" galvanized steel covers over reinforcing bars.

     We believe that this may be a typographical or word processing error. We are not familiar with this requirement on any of the more than 250 precast parking structures that we have built.
     - Is it possible that this Note was intended to require: "…1-1/2" or 2" clear concrete cover over the reinforcing for the double tees flanges as described in ACI 362."?
       - » Please clarify.

       BL Response: Delete Paragraph 2.03E per Addendum #5

AN EQUAL OPPORTUNITY EMPLOYER M/F

Estimating Notes & Questions
Based on review of Bid
Documents Dated July 10, 2009
continued

5. Page 6, paragraph 2.06 Finishes
   - Paragraph C: calls for Architectural Finish (Finish C).
     ¼" dia surface holes are not uncommon in structural concrete. To fill them all

     would be an unusual and costly requirement. We do not find where this finish is required for products shown on the drawings. Perhaps it is a carry over from another spec and is not applicable to this project.

     - We would suggest that the precast products receive finishes that are normally associated with precast parking garages. These can generally be described as Standard Grade finishes as defined in PCI MNL 116.

       » Please clarify, if Finish C is applicable to this project; where and on what products does it occur?

       BL Response: Finsh C only on exterior exposed Architectural Panels.

       » Are Standard Grade finishes acceptable as defined in PCI MNL 116?

       BL Response: Standard grade finishes acceptable on all other surfaces.

   - Paragraph E. 1.: calls for Thin Brick as manufactured by Watsontown Brick Company.
     We have checked their web site and do not find any Thin Brick product applications on the website or in their project portfolio.
     - Two (2) commonly used thin brick suppliers are Summitville and Metro Brick

       » Are these acceptable manufacturers in lieu of Watsontown Brick Co.?

       BL Response: Working on answer. Should have response by mid week 6/9/10.

6. Page 7, paragraph 3.03 Precast Concrete Curing and Protection
   - Paragraphs B through G: calls for 'wet' curing products for seven (7) days.
     This curing procedure is not applicable to precast/prestressed concrete products. We believe that these paragraphs may have been included from a previous specification that included cast-in-place concrete structural components.

     - The Curing specified in paragraph 2.05 H. is the appropriate curing reference for precast/prestressed concrete.

       » Please confirm that paragraphs 3.03 B through G are not applicable to the precast products for this project.

       BL Response: Delete Paragraphs 3.03B through G per Addendum #5

AN EQUAL OPPORTUNITY EMPLOYER M/F

7. Page 9, paragraph 3.05 Erection Tolerances
   - Paragraphs C & D: The Tolerances listed are not applicable to the type of precast required for this project and may not be achievable.
     We recommend that the Industry Standard Tolerances published by PCI in Manuals 116, 127 & 135 be specified for production and erection Tolerances.
     BL Response: Section 034100, Paragraph 3.05 Delete Sub-Paragraphs C & D. Add New Sub-Paragraph C "Erect Members per standard erection procedures per PCI MNL-116, 127 & 135." per Addendum #5

AN EQUAL OPPORTUNITY EMPLOYER M/F

State of Connecticut

Equal or Substitute Product Request

Department of Public Works

● Pre-Bid ○ Post-Bid. 15.3.2.1 ○ Post Bid. 15.3.2.2 ○ Post-Bid. 15.3.2.3

SEE PROCEDURE AND INSTRUCTIONS

Request No.: 1 Dated: 6/3/10

To: State of Connecticut
Department of Public Works

Department of Public Works Project Number: CF-RS-273

Project Name and Location: SCSU Lot #7 Parking Garage
Wintergreen Ave – New Haven, CT

References: Specifications - Section: 07 95 00 Paragraph(s): 2.01, 2.04-A
Drawings - Drawing No.: A9.02 Detail(s): 2

Contractually Specified Product: Zip Block (ZB) by C/S Group

Contractor Proposed Product: WaboCrete Membrane by Watson Bowman Acme Corp.

Proposed product is an ● Equal ○ Substitute Product Model Number: ME 600

Proposed product is ○ New ○ 2-5 Years Old ○ 5-10 Years Old ● More than 10 Years C

See attached data for both Specified and Proposed Products as required by Specifications Article 15, Section 00 72

Data attached: ☒ Drawings ☒ Product Data ☐ Reports ☐ Samples ☐ Tests ☐ Other:

Reason(s) for not providing the Specified Product:

The Specified products ZB by C/S Group and LMS by MM Systems Corp are not equal materials and therefore cannot be competitively Bid. WaboCrete Membrane by Watson Bowman Acme is equal to LMS by MM Systems.

Similar Installation:

Project: Aetna Parking Garage
Location: 1000 Middle Street, Middletown, CT

Owner: Aetna Insurance Co.
Consultant: Simpson Gupertz & Heger
Date Installed: Summer 2005

Will proposed Substitute Product impact other parts of the Work? ● No ○ Yes - see attached Explanation

Will proposed Substitute Product increase the Contract Time? ● No ○ Yes - by ____ Days

Actual Dollar Savings to the State of Connecticut if substitution is accepted: Unknown

The Undersigned Certifies that the proposed Request for an Equal or Substitute Product conforms to the Specifications for this project, Division 1, General Requirements, Section 00 25 00.

Request submitted by the ~~General Contractor~~ Supplier: Maloney Morris Associates (name)

By: Stephen R Williams (name) ____ (title) Stephen R Williams (signature) 06/03/10 (date)

CONTRACTOR - Send copies to: Supervising Project Manager - Project Manager - Construction Administrat

Consultant's Review - This Substitution Request is:

☐ **Approved** - Make Submittals in accordance with Specification Section 00 33 00 Submittals.
☐ **Approved as Noted** - Make Submittals in accordance with Specification Section 00 33 00 Submittals.
☐ **Rejected - Use Specified Material(s).**
☐ **Rejected - Request Not Received Within Specified Time Period - Use Specified Material(s).**

Review Issued by: TODD JOHNSON (name) Todd C Johnson (signature) 4/1/10 (date)

Consultant -Send completed copies to: Chief Architect - Chief Engineer -SPM-PM-CA - Oth

If Approved: As noted by Consultant,
Director of Project Management _____ (signature) _____

Copy: Project File [redacted] CF-RS-273

Detailed Comparison
of Specified Expansion Joint
to Proposed Expansion Joint

Product / Significant Features	Specified Product ZB by C/S Group	Specified Product LMS by MM Systems Corp.	Proposed Equal VaproCrete Membrane by Watson Bowman Acme Corp.
Utilizes 2 part Elastomeric Conc Header Material	No	Yes	Yes
Utilizes Edge Void Sealant that requires regular maintenance	Yes	No	No
Proven performance in Parking Deck application	No - Has only been available for approx. 3 years	Yes	Yes - Over 20 years of successful installations
"Equal" products available from other manufacturers	No	Yes	Yes

Watson Bowman Acme®

Wabo®Crete Membrane

Membrane sealing expansion joint system

Features	Benefits
• Watertight applications	The membrane seals combined with WaboCrete II elastomeric concrete provides a monolithic sealing system preventing water from leaking through the expansion joint opening.
• Energy adsorbing	WaboCrete II has been developed to adsorb the impact loads associated with typical parking deck applications.
• Heat weldable seals	Provides a continuous, watertight seal at transitions and intersections.
• Proven performance	Over 20 years of successful installations.

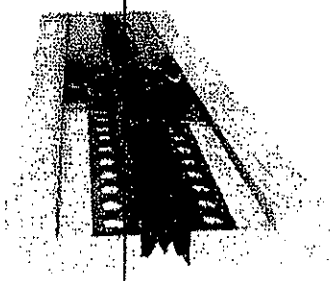

DESCRIPTION:

The industry's original elastomeric concrete system, Wabo®Crete Membrane is a high performance joint sealing system specifically designed to meet the unique demands of parking structures. The Wabo®Crete Membrane system combines a choice of versatile elastomeric glands with hole patterns in the flange areas providing secure mechanical attachment between the concrete substrate and Wabo®Crete II elastomeric header. The tough and durable header flexes with deck loads and seals out moisture. Installed by certified applicators, the Wabo®Crete Membrane systems are available with the strongest warranties in the industry.

RECOMMENDED FOR:

- Sealing expansion joint openings on parking decks.
- New construction or repair and maintenance of existing expansion joints.
- High impact and repetitive loading conditions

PACKAGING/COVERAGE:

- Rubber seals are cut to length and shipped on pallets per limitations of shipping methods
- Wabo®Crete II
  - PTA – ½ gal container
  - PTB – 1 gal container
  - PTC – 60 lbs aggregate
  - A+B+C = 1 unit
    1 unit = 0.6 ft^3 (1030 in^3)

BASF
The Chemical Company

TECHNICAL DATA:

Design Information

The Wabo®Crete Membrane system is available in 3 different series. The ME series uses a multi-celled [illegible] designed per ADA guidelines. The MM series features a simple ribbed profile ideal for split slab conditions or rehabilitating existing joints. The MX series features a simple two-cell web design for greater movement capability.

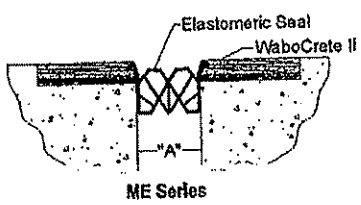

ME Series

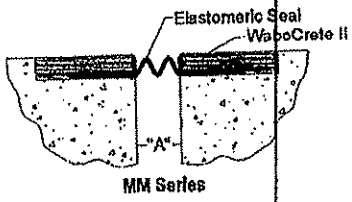

MM Series

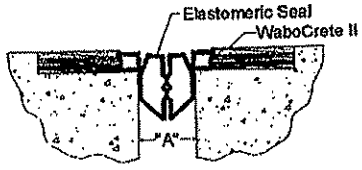

MX Series

Movement Table

Model Number	Installation Width				Joint Opening "A"					
	Min		Max		Min		Max		Total	
	inches	mm	inches	mm	inches	mm	inches	mm	inches	mm
ME-225	1.00	25	2.00	51	0.75	19	2.25	57	1.50	38
ME-300	1.75	44	2.75	70	1.25	32	3.00	76	1.75	44
ME-400	2.13	54	3.75	95	1.50	38	4.00	102	2.50	64
ME-500	2.63	67	4.75	121	1.76	44	5.00	127	3.25	83
ME-600	3.00	76	5.75	146	2.00	51	6.00	152	4.00	102
MM-150	N/A	N/A	N/A	N/A	0.50	13	2.50	64	2.00	51
MM-200	1.00	25	2.00	51	0.75	19	4.00	102	3.25	83
MM-800	2.00	51	4.00	102	1.75	44	8.00	203	6.25	159
MX-200	0.75	19	2.00	51	0.38	10	4.00	102	3.63	92

When specifying a corner conditions, add a "C" after the models number. For example: ME-225C. WBA can develop custom solutions. Contact your WBA Representative with your special design needs.

Watson Bowman Acme

Physical Properties:
Elastomeric Concrete (WaboCrete II)

PHYSICAL PROPERTY	ASTM TEST METHOD	REQUIREMENTS
Binder Only		
Tensile Strength	D 638	750 ps (5MPa) min.
Elongation at Break	D 638	200% min.
Hardness (Shore D)	D 2240	30-49
Compression Set (22hrs @ 158F)	D 395	50% max.
Tear Resistance	D 624	80 lbs/in min.
Water Absorption (By Weight)	D 570	3% max.
Heat Shrinkage	D 1299	1.6% max.
Over Aging (@158F, 72 hrs) Tensile Strength Elongation	D 638	750 psi (5MPa) min. 150%
Binder and Aggregate		
Compressive Strength	D 695[1]	Min. 15 MPa (2200 psi)
Resilience (@5% deflection)	D 695	90% min.
Pot Life (@75F)		10 mn
Slant Shear Bond Strength	D 882	251 psi (2MPa) min.
Impact Resistance @ -20F (-29C) @ 32F (0C) @ 158F (70C)	See Note[2]	 no cracks no cracks no cracks

1 - ASTM D695 modified for compressive properties by performing the test at 0.25 in/min.
2 - Specimens are cast discs with a 2.5" diameter and 0.375" thickness. Specimens are conditioned for four hours at test temperature. A one pound steel ball is dropped onto the center of the specimen through a plastic tube from an initial height of 5 feet. The drop height is increased by increments up to 7 feet or until the specimen cracks.

Elastomeric Gland (Santoprene)

PHYSICAL PROPERTY	ASTM TEST METHOD	REQUIREMENTS
Tensile Strength, min	D-412	850 psi
Elongation at Break, min	D-412	300%
Hardness, Shore A	D-2240	67 +/- 3
100% Modulus, min	D-412	275 psi
Tear Strength, avg	D-624	140 lbs/in
Tension Set, avg	D-412	10%
Compression Set, max 22 hrs @ 73?F 70 hrs @ 257?F	D-395	 35% 45%
Ozone Resistance	D-1171	No cracks
UV Resistance	SAE J1960	Pass
Staining Resistance	D-925	No staining
Brittle Point	D-746	-81?F

Installation Summary:

- Concrete substrates must be abrasive blasted to remove all laitencies and contaminants which may cause bonding problems.
- Apply Wabo®Bonding Agent (primer) to surface of the properly prepared concrete prior to installation of Wabo®Crete II. Do NOT apply Wabo®Bonding Agent to steel substrates. There must be no visible moisture prior to the application of the primer. Primer can be brush applied. Do NOT allow primer to dry prior to placement of Wabo®Crete II.
- Thoroughly pre-mix (approximately 20 seconds) Part B separately before pouring entire contents of Part B into clean 5 gallon container. Add Part A and mix both components for approximately 30 seconds, or until well blended.
- Slowly add the aggregate component to the mixed liquids and mix until all aggregate is coated (approximately 1 minute). This mix can be poured into the properly prepared blockout, in which the primer is still wet. The material will flow and self-level. Use a margin trowel to work material and finish surface.
- For sloped conditions, add Wabo®Non Flow Additive to the liquid-aggregate mixture.
- The elastomeric gland shall be field installed in longest possible continuous lengths. Install the expansion control system in accordance with manufacturer's typical details and installation procedures.

For Best Results:

- Install when concrete substrate is clean, sound, dry, and cured (14 day minimum).
- Do not install if the joint's anticipated movement will exceed the system's movement range.
- Protect the work area with appropriate plastic sheeting.
- Minimize splice points by installing seals in longest possible continuous lengths.
- Do not allow any of the components to freeze prior to installation. Store all components out of direct sunlight in a clean, dry location between 50°F (10°C) and 90°F (32°C).
- Shelf life of chemical components is approximately 1 year.
- Periodically inspect the applied material and repair localized areas as needed. Consult a Watson Bowman Acme representative for additional information.
- Make certain the most current version of the product data sheet is being used. Please consult the website (www.wbacorp.com) or contact a customer service representative.
- Proper application is the responsibility of the user. Field visits by Watson Bowman Acme personnel are for the purpose of making technical recommendations only and not for supervising or providing quality control on the jobsite.

Related Documents:

- Material Safety Data Sheets
- Wabo®Crete Membrane Specification
- Wabo®Crete Membrane Sales Drawings
- Wabo®Crete Membrane Installation Procedure

LIMITED WARRANTY:

Watson Bowman Acme Corp. warrants that this product conforms to its current applicable specifications. WATSON BOWMAN ACME CORP. MAKES NO OTHER WARRANTY, EXPRESS OR IMPLIED, INCLUDING ANY WARRANTY OF MERCHANTABILITY OR WARRANTY OF FITNESS FOR A PARTICULAR PURPOSE. The sole and exclusive remedy of Purchaser for any claim concerning this product, including, but not limited to, claims alleging breach of warranty, negligence, strict liability or otherwise, is the replacement of product or refund of the purchase price, at the sole option of Watson Bowman Acme Corp. Any claims concerning this product shall be submitted in writing within one year of the delivery date of this product to Purchaser and any claims not presented within that period are waived by Purchaser. IN NO EVENT SHALL WATSON BOWMAN ACME CORP. BE LIABLE FOR ANY SPECIAL, INCIDENTAL, CONSEQUENTIAL (INCLUDES LOSS OF PROFITS) OR PUNITIVE DAMAGES. Other warranties may be available when the product is installed by a factory trained installer. Contact your local Watson Bowman Acme representative for details. The data expressed herein is true and accurate to the best of our knowledge at the time published; it is, however, subject to change without notice.

Contact
Watson Bowman Acme Corp. 95 Pineview Drive, Amherst, NY 14228
phone:716-691-7566 / fax: 716-691-9239 / web site: http://www.wbacorp.com

MM® LMS Expansion Joint

LokCrete Membrane Sealing System

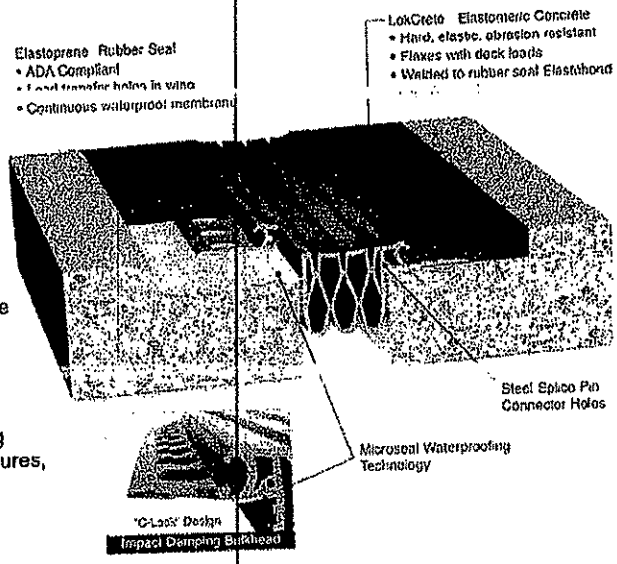

DESCRIPTION

LMS is a waterproof expansion joint system with impact absorbing elastomeric concrete that bonds a continuous Elastoprene® membrane seal to the concrete deck. This creates a high performance monolithic sealing system that prevents water intrusion. The extended movement capability accommodates joint openings that become larger due to long-term shrinkage and creep.

BASIC USE

LMS is designed for sealing traffic bearing expansion joint openings in parking structures, stadiums, plaza decks and other open-air structures requiring a watertight seal.

FEATURES

- LokCrete® - hard, elastic, abrasion resistant embed material that flexes with deck loads.
- 2-part polyurethane with chemical cross-linking technology eliminates the need for primers.
- System is integral with the concrete deck.
- Seal profiles are ADA compliant and can be heat welded or adhesive rubber bonded.
- Low profile seal design accommodates post tension cables and conduit.
- Capable of thermal, seismic, vertical and lateral shear movement.
- Exceptionally durable under vehicular traffic loads and extreme weather conditions.
- Resistant to UV, ozone, acid rain, most chemicals and extreme temperatures.

SPECIAL FEATURES

- NO PRIMERS REQUIRED – bonds directly to concrete, aluminum and steel.
- Steel pin reinforced splice connections.
- Seal design contains tire impact dampener.
- Fire Barriers – MM Expansion Joint Systems are available with 2 - 4 hour fire protection ratings.

LIMITATIONS

- Concrete blockouts must be properly formed, finished and have sound substrate.
- Surfaces must be dry, free of any laitance, curing agents or foreign matter.
- Install temperature must be 40°F and rising.

Additional Safety Margin Movement capacity accommodates concrete shrinkage, vertical deflection and unexpected movement.

PACKAGING

"Easy-mix" pre-measured packaging insures consistent field performance. LokCrete is supplied in 5 gallon plastic buckets. Parts A, B and C are pre-measured and self-contained within the bucket. (500 cubic inch yield.)

LokCrete Membrane Seals are supplied in longest possible lengths shipped on pallets or spools.

STORAGE

All materials should be stored in a cool, dry location 60-80°F (15-27°C) prior to use.

COLOR OPTIONS

LokCrete® elastomeric concrete available in UV stable Black or special order Gray with matching Elastoprene® membrane color seal.

PRECAUTIONS

Use splash goggles and chemical resistant gloves to avoid prolonged or repeated skin contact. Use with adequate ventilation. In case of eye contact, immediately flush (low pressure) with lukewarm water. In case of skin contact, immediately wash skin with soap and water. Read and follow labels and Material Safety Data Sheet before use.

MM Systems Corporation • 50 M[illegible] W[illegible]y, Pendergrass, GA 30567 • 866.506.6929 • ww[illegible]v.mmsystemscorp.com

MM® LMS Expansion Joint System

SELECTION GUIDE

Model Number	Movement Range	Joint Opening "A" Thermal Minimum		Thermal Maximum		Safety Maximum		Installation Width "A" Minimum		Maximum		Depth "B" Clearance	
LMS-100	.875	22	.375	10	1.00	25	1.25	32	.500	13	.750	19	2.50	64
LMS-150	1.25	32	.500	13	1.50	38	1.75	44	.750	19	1.375	35	2.50	64
LMS-250	2.50	64	.750	19	2.50	64	3.25	83	1.25	32	2.25	57	2.50	64
LMS-350	3.25	83	1.00	25	3.50	89	4.25	108	1.50	38	3.25	83	2.50	64
LMS-450LP	4.00	102	1.50	38	4.50	114	5.50	140	2.25	57	4.25	108	2.50	64
LMS-450HD	4.00	102	1.50	38	4.50	114	5.50	140	2.25	57	4.25	108	2.50	64
LMS-550-LP	5.00	127	1.50	38	5.50	140	6.50	165	3.00	76	5.25	133	2.50	64
LMS-550-HD	5.00	127	1.50	38	5.50	140	6.50	165	3.00	76	5.25	133	3.00	76

Dimensions are in inches (bold) and millimeters.
***Safety Maximum** – Safety Margin Movement capacity accommodates concrete shrinkage, vertical deflection and unexpected movement.*

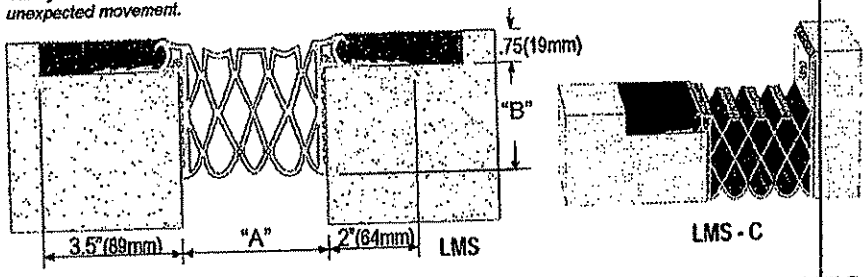

LIMITED WARRANTY

MM Systems warrants the LokCrete Membrane System to be free of defects in material and conform to technical data listed. We make no warranty as to color or appearance. Since methods of application can affect performance and on site conditions are beyond our control, MM Systems makes no other warranty, expressed or implied, including warranties of MERCHANTABILITY AND FITNESS FOR A PARTICULAR PURPOSE. MM Systems sole obligation shall be, at its option, to replace, or to refund the purchase price of the quantity of system proved to be defective. In no event shall MM Systems be liable for any special, incidental, consequential, loss of profits or punitive damages. Other warranties may be available when installed by a MM Systems Certified Contractor.

PHYSICAL PROPERTIES

Physical Property	Test Method	Value
Binder Only		
Tensile Strength	ASTM D412	4750 psi
Ultimate Elongation	ASTM D412	10%
Hardness, Shore D	ASTM D2240	78 +/-5
Tear Resistance	ASTM D624	200 pli
Water Absorption, max	ASTM D570	3%
Heat Shrinkage, max	ASTM D1299	2%
Compression Set	ASTM D395	48%
Binder & Aggregate		
Compressive Strength	ASTM D695	2750 psi
Resilience @ 5% deflection	ASTM D695	95%
Impact Resistance -20°F (-29°C)	ASTM D420	No Cracks
Adhesion	ASTM D421	Concrete Failure
Cure Time / Open to traffic		2- 6 Hours
Cure Time / Chemical Resistance		7 Days

NOTE: The foregoing information is published as general information only. The listed properties and performance characteristics are approximate values while actual field results may vary.

INSTALLATION

1) Remove and repair all unsound concrete in and around the blockout. All spalls must be repaired with compatible patching material.
2) Prepare substrate by sandblasting. The blockout must be clean and dry prior to installation.
3) Factory directional changes – splice seals into place (insert steel splice pins to align and reinforce butt splice connections).
4) Insert membrane seal into joint opening and mask-off deck and top of membrane seal.
5) Lift wing of LMS Seal and remove the release liner from Microseal Waterproofing Tape.
6) Brush-apply ElastoBond Activator to top of wing and sidewall of box bulkhead. (fuses LokCrete to seal)
7) Pour premixed A&B into a clean 5-gallon bucket. Immediately and gradually blend in Part C (aggregate). Mix all 3 components for 3 minutes.
8) Install temperature must be 40° F and rising and 5° F above the dew point. Maximum allowable concrete moisture content is 5%.
9) Install in accordance with detailed installation guide.

MM Systems reserves the right to amend or withdraw information contained herein, without notice, and will not be liable for any inaccuracy or ambiguity of said information.

Current Issue 10-11-05

Spec Data

MM
50 MM Way, Pendergrass, GA 30567 • 706.824.7500 • www.mmsystemscorp.com

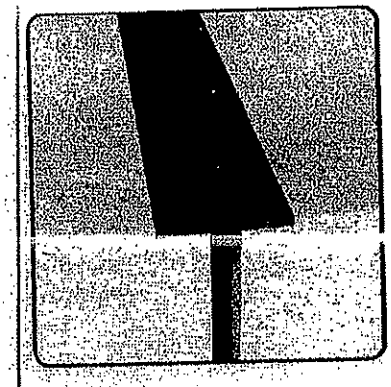

C/S ZB 200/400 SERIES SPEC DATA SHEET

C/S Expansion Joint Systems

PRODUCT DESCRIPTION
The ZB 200/400 expansion joint system is a one-piece, extruded EPDM elastomeric seal with integral nosings, bonded into a high-strength epoxy bedding, designed for use in parking deck applications. The resulting system is then sealed on each side with a urethane sealant, resulting in an extremely durable and watertight joint system.

BASIC USES
Expansion joint cover for parking decks.

TECHNICAL DATA

SEAL	ASTM TEST METHOD	VALUE
Material	----	EPDM
Color	----	Black
Durometer, Shore A	D2240	75
Tensile, psi	D412	1,460 psi
Elongation %	D412	380%
Compression Set %	D395 (22 Hrs @ 100°C)	28%
Heat Aging	D573 (70 Hrs @ 100°C)	
Change in Hardness (Durometer)		77 (+3 pts)
Change in Tensile %		1,220 psi (-16%)
Change in Elongation %		304% (-20%)
Ozone Resistance	D1171 (72 Hrs @ 50 pphm)	No Cracks
Water Resistance (Volume)	D471 (48 Hrs @ 70°C)	+1.8%
Low Temperature Brittleness	D2137 (-40°C)	Pass

SPECIFICATIONS: ASTM D2000 M2AA710, A13, B13, C12, EA14, F17

EPOXY	ASTM TEST METHOD	VALUE
Consistency	C881	0 (No flow)
Gel Time	C881	35 Minutes
Bond Strength (2 day cure)	C882	2,232 psi
Bond Strength (14 day cure)	C882	2,460 psi
Absorption	D570	0.63%
Linear Shrinkage Coeff.	D2566	0.0007
Compressive Strength	D695	11,236 psi
Compressive Modulus	D695	250,100 psi
% Elongation at Break	D638	2.56%
Shear Strength	D732	3,550 psi
Flexural Strength	D790	5,582 psi
Shrinkage	C884	Pass
Thermal Compatibility	C884	Pass

EDGE VOID SEALANT	ASTM TEST METHOD	VALUE
Extrudability	C603	40-45 g/second
Density, lbs/gallon	D1475	8.2 +/- 0.1
Tack Free Time	C679	25 +/- 3 min.
Vertical Sag	C2202	None
Hardness, Shore A	C661	50 +/- 5
Tensile Strength, psi	D412	325 +/- 25
% Elongation	D412	550 +/- 50
Peel Adhesion, pli	C794	27 +/-3
Bond Durability, %	C719	25% T.J.M
Weathering, 500 hours	C793	No Change
Staining	C510	None

ADDITIONAL INFORMATION
See accompanying product information sheets, MSDS, FAQ Sheet, Installation Instructions and sample warranty for additional information on the ZB 200/400 expansion joint system.

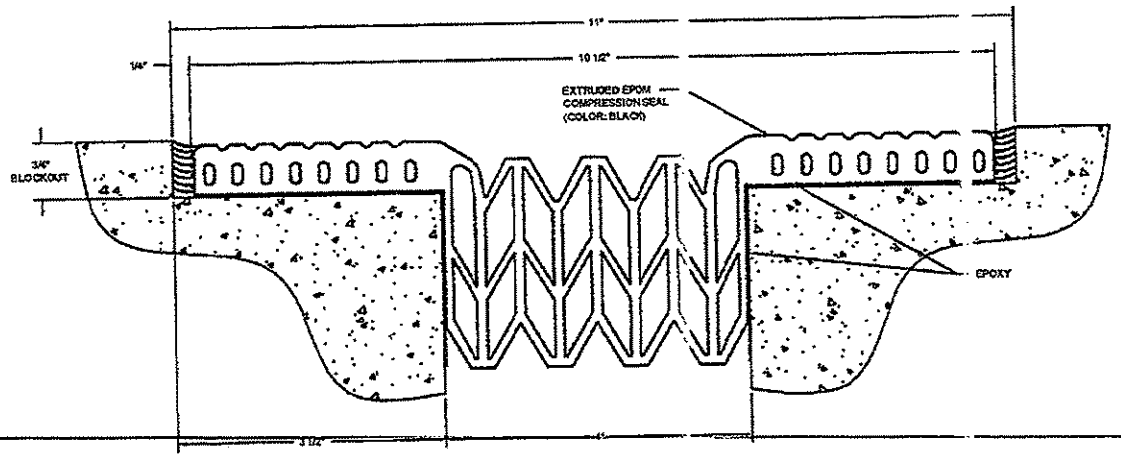

ZB-400

© COPYRIGHT 2004 THE C/S GROUP OF COMPANIES

C/S Group
Construction Specialties, Inc. - C/S Construction Specialties company
Manufacturing / Sales Locations:
U.S.A. - Tel:(570) 546-5941/Fax:(570)546-8022/InfoBc-sgroup.com
Canada - Tel:(905) 274-3611/Fax:(905)274-6241/canada@c-sgroup.com
England - Tel:+44-1-296-611000/Fax:+44-1-296-399444/InfoBc-sgroup.co.uk
France - Tel:+33-232-648400/Fax:+33-232-648421/exportBcs-France.fr
Singapore - Tel:+65-6-276-4276/Fax:+65-6-273-7557/conspecBsingnet.com.sg
Malaysia - Tel:+60-3-556-93227/Fax:+60-3-556-95237/conspecBc-sgroup.com.my
Hong Kong - Tel:+852-2892-0917/Fax:+852-2892-0956/conspecBc-sgroup.com.hk
Taiwan - Tel:+886-2-2712-8120/Fax:+886-2-2713-9022/conspecBc-sgroup.com.tw
Australia - Tel:+61-2-9540-5400/Fax:+61-2-9540-5253/sales@c-sgroup.com.au
New Zealand - Tel:+64-4-527-9156/Fax:+64-4-568-8347/InfoBc-sgroup.co.nz
UAE. - Tel:+971-4-331-2167/Fax:+971-4-331-5023/c_sgroup@emirates.net.ae
Uruguay - Tel:+598-2-525-0126/Fax:+598-2-525-2489/c-sgroup@adinet.com.uy

PROJECT: -	SCALE: N.T.S.
CUSTOMER: -	SUB. BY: -
LOCATION: -	DATE: -
JOB NO.: -	SHT. 1 OF 1

© COPYRIGHT 1991 THE C/S GROUP

... WHITING
(...-1974)

WILLARD HACKERMAN
PRESIDENT AND CEO

FOUNDED 1906

THE WHITING-TURNER CONTRACTING COMPANY

(INCORPORATED)

ENGINEERS AND CONTRACTORS

195 Church Street 16th Floor
New Haven, CT 06510
Phone: (203) 777-6783
Fax: (203) 777-6839
www.whiting-turner.com

CONSTRUCTION MANAGEMENT
GENERAL CONTRACTING
DESIGN-BUILD
SPECIALTY CONTRACTING
OFFICE/HEADQUARTERS
RETAIL/SHOPPING CENTERS
HEALTH CARE
HI-TECH/PHARMACEUTICAL
HIGH-TECH/CLEANROOM

INSTITUTIONAL
DATA CENTERS
SPORTS AND ENTERTAINMENT
INDUSTRIAL
WAREHOUSE/DISTRIBUTION
MULTI-FAMILY RESIDENTIAL
ENVIRONMENTAL
BRIDGES, CO

REQUEST FOR INFORMATION

5/27/10

BL Companies
365 Research Parkway
Meriden, CT 06450

Attention: Scott Pellman

RE: SCSU Lot #7 Parking Garage
New Haven, CT

Dear Scott,

Please review the RFI's listed below and respond accordingly.

1. Schedule 7.5.1 – Named Subcontractors found in section 00 41 00 requires a Mechanical Subcontractor be named for plumbing, sprinkler, etc. Please advise if it is acceptable to name two different Subcontractors, or only plumbing, to complete each portion of work since many plumbing Subcontractors do not install sprinklers.

2. Schedule 7.5.1 – Named Subcontractors found in section 00 41 00 states the HVAC contract is to include controls. Please confirm RCMS will be providing a proposal for controls and it should not be included in the HVAC contract.

3. Please advise who will be responsible for relocating the utility poles and overhead wires. If UI will be responsible for the utility poles and overhead wires please confirm they will be providing a proposal to the General Contractors or should the General Contractors carry an across the board allowance?

4. Please provide additional details for the existing switchgear located in the energy center so the correct gear can be priced. Also, please confirm SCSU will shut down the existing switchgear in order to connect the new switchgear. Can this work take place during normal working hours?

5. Drawing GU1 shows new conductors being pulled through existing conduits coming out of the Energy Center. Please advise how many and what type of conductors are already in the existing conduits where new wires are to be pulled. Also, please confirm SCSU will shut down the existing conductors in the existing man holes to pull the new conductors.

6. Drawing GU1 shows an existing electrical line leaving and existing electrical manhole by the northwest corner of the building. It appears to head north towards the existing manhole located outside the Energy Center but the line disappears. Please provide additional details.

7. It appears three sub sections are needed for Supplemental Bid #1 to capture the cost impact to the base bid, if Supplemental Bid #2 is taken, and if Supplemental Bid #3 is taken. Please advise.

8. Detail 2/A5.04 calls out for an overhead coiling door. Please provide additional details if there is a coiling door on this project.

9. Please confirm, as discussed at the prebid conference, the project site will be available 24 hours/7 days outside of the Special Olympics events, graduation, and finals.

10. Please confirm fire alarm and controls will all be a sole source installation and the associated proposals will be provided to the General Contractors.

11. Please advise if sign types A1, A2, A3, and A4 are all controlled by the parking control equipment. If not, are sign types A1, A2, and A3 continuously illuminated with no controls to change the settings? Also, please confirm if all type A signs are LED illuminated.

12. Details 1 & 2/MP1.01 show CU-1 mounted in two different locations. Also, the AC Unit Schedule shows two CU's for AC-1 however there appears to be only one CU shown on the plan drawings. Please advise.

13. Details 8&9/A4.05 call out for 2 hour rated access panels at elevators, however, there doesn't appear to be any rated access doors shown at the elevators. Please advise if they are required and where they are located. Also, the access doors and frames specification doesn't provide details for rated access doors.

14. Detail 1/A4.05 calls out to reference the plumbing drawings for the trench drain details, however, there doesn't appear to be a trench drain on the plumbing drawings. Please advise.

15. Please advise if a concrete sealer product is required to be applied to the precast concrete and cast in place concrete slab. If yes, please provide product manufacturers and locations.

16. Please advise what happens to the temporary parking lot after construction of the parking garage is complete.

17. Please confirm, as noted at the prebid conference, we can utilize the near by tennis courts during construction.

18. Specification section 03 41 00 lists Old Castle as an acceptable fabricator of the plant-precast structural concrete. Please advise if any other structural precast fabricators would be considered as Old Castle doesn't manufacture double tees.

19. It appears specification section 01 25 00 – Substitution Procedures has not been issued. Please advise.

20. Please confirm the General Contractor is required to provide all security and tele/data control panels, conduit with pulls, and junction boxes for others to install the wiring and devices.

05/27/2010 10:51 2037776839 WHITING-TURNER VSOM PAGE 02/03

21. Specification section 21 12 00 - 2.02 states schedule 10 galvanized pipe is to be used with grooved-ends , however, in section 21 12 00 - 3.10 it states to use standard weight pipe or sch 30 pipe with cut-grooved ends. Please advise which piping and pipe end detail should be used for the fire-suppression standpipes.

22. Specification section 21 05 00 - 3.01.J states sleeves are not required for core drilled holes. Specification section 21 05 00 – 3.01.K says to install sleeves for pipe passing through concrete and masonry walls and concrete floors and roof slabs. Please advise if sleeves are required at core drilled holes.

Thank you,

THE WHITING-TURNER CONTRACTING COMPANY

Dan Boyle
Asst. Project Manager

cc: Mike, File

BL Companies

SCSU LOT #7 PARKING GARAGE
PROJECT NO. CF-RS-273
RFI'S / BID QUESTIONS RESPONSE:

DATE: 6/2/10

ATTENTION: The Whiting-Turner Contracting Company

DISTRIBUTION:

PREPARED BY: Todd Johnson T: Ext.:

EMAIL: TJohnson@blcompanies.com

PROJECT NAME: SCSU PROJECT NUMBER: CR-RS-273

SUBJECT: RRFI / Bid Questions The Whiting-Turner Contracting Company

1. List each subcontractor if the plumbing subcontractor is not doing the sprinkler work..
2. Refer to Addendum #4
3. Refer to Addendum #4 (Response to RFI's)
4. Switchgear information located on E6.01
5. Refer to Addendum #4 (Response to RFI's)
6. Refer to Addendum #4 (Response to RFI's)
7. Supplemental bids are taken in order see Refer to Addendum #4 (Response to RFI's)
8. Was unable to locate not on drawing. No overhead doors in project scope.
9. Refer to Addendum #4
10. Refer to Addendum #4
11. All type A signs are LED Controlled by parking controls see Refer to Addendum #4
12. Only one CU for AC-1 located to west of column line 11 mounted on the south wall at 8'-0" A.F.F. Remove CU in plan detail 2 on MP 1.01 Keep location shown on 1/MP1.01
13. See attached sketch ASK-4 and revised Spec Section 083113 in Addendum #5
14. There should be a trench drain see Addendum #5.
15. Refer to Addendum #5
16. It stays the university will decide what to do later. No work for the contractor
17. Refer to Addendum #4 (Response to RFI's)
18. Refer to Addendum #4 (Response to RFI's)
19. Refer to Addendum #4
20. Refer to Addendum #4
21. Schedule 10.
22. No.

ARCHITECTURE
ENGINEERING
PLANNING
LANDSCAPE ARCHITECTURE
LAND SURVEYING
ENVIRONMENTAL SCIENCES

355 Research Parkway
Meriden, Connecticut
06450

800.301.3077 T
203.630.1406 T
203.630.2615 F

blcompanies.com

KBE BUILDING CORPORATION
30 Batterson Park Road, Farmington, Connecticut 06032
Mail To: P.O. Box 4052 Farmington, Connecticut 06034-4052
Tel 860.284.9710
Fax 860.284.1174
Connecticut — Maryland
www.kbebuilding.com

FAX COVER SHEET

TO:	**Project Architect/Engineer**
COMPANY:	BL Companies
PHONE:	203-630-1406
FAX:	203-659-8364
FROM:	Matt Karatkewicz
COMPANY:	KBE Building Corp.
PHONE:	860.284.7485
FAX:	860.284.0121
DATE:	May 27, 2010
PAGES: (including cover page)	2
RE:	SCSU Parking Garage RFI's Project No. CF-RS-273
CC:	DPW Project Manager Michael Milne 860-713-7261

COMMENTS:

1) Is the Utility Co responsible for ALL NEW POLE INSTALLS detailed on GU-1? Drawings only indicate that (1) NEW GUY POLE AS PART OF THE BASE BID. There seems to be several additional poles required for the overhead relocation.

2. Who will be required to perform the OVERHEAD RELOCATION? IS THIS WORK COVERED IN THE UTLITY COMPANY FEE?

3. Site Drawing GU-1 does not specifically show the existing conduit line entering the existing MH outside the Energy Center. Could you clarify that it is in this MH?

4. Is there a detail showing the approx distance from the Existing MH outside the Energy Center to the New Proposed Metal Clad 15kv Switch/gear? If not, for bidding purposes could you supply a distance?

FAX COVER SHEET

5. On the drawings the supplemental bid # 2 is shown on the base bid drawings and also on the supplemental bid # 1 drawings. Should the supplemental bid # 2 on the supplemental bid # 1 drawings be labeled as supplemental bid # 2A?

6. Does Supplemental Bid #2 assume that Supplemental Bid #1 has been accepted into the scope of work?

6. On the drawings EL1.04 and EL1.04A are both labeled as supplemental bid # 3. Should the drawing EL1.04A be labeled as supplemental bid # 3A?

7. Which trade provides the oil interceptor, the sanitary force main connection vault and the sanitary sewer pump station?

BL Companies

SCSU LOT #7 PARKING GARAGE
PROJECT NO. CF-RS-273
RFI'S / BID QUESTIONS RESPONSE:

DATE: 6/2/10

ATTENTION: KBE Building Corporation

DISTRIBUTION:

PREPARED BY: Todd Johnson T: Ext.:

EMAIL: TJohnson@blcompanies.com

PROJECT NAME: SCSU PROJECT NUMBER: CR-RS-273

SUBJECT: RRFI / Bid Questions KBE

1. Refer to Addendum #4 (Response to RFI's)
2. Refer to Addendum #4 (Response to RFI's)
3. Refer to Addendum #4 (Response to RFI's)
4. Refer to Addendum #4 (Response to RFI's)
5. Refer to Addendum #4 (Response to RFI's)
6. Yes - Refer to Addendum #4 (Response to RFI's)
7. Remove EL1.04 - Refer to Addendum #4
8. That is the contractors decision. SCSU is buying a complete project.

ARCHITECTURE
ENGINEERING
PLANNING
LANDSCAPE ARCHITECTURE
LAND SURVEYING
ENVIRONMENTAL SCIENCES

355 Research Parkway
Meriden, Connecticut
06450

800.301.3077 T
203.630.1406 T
203.630.2615 F

blcompanies.com

GENERAL CONTRACTORS

MPCC CORP.
81 Rockdale Avenue, New Rochelle, NY 10801
Tel #: 914.636.0000 Fax # : 914.636.0019

REQUEST FOR INFORMATION

Project: Southern Connecticut State Lot #7 Parking Garage

RFI NO: #5 DATE: 05/28/10

ATTN: **Architect/Engineer**
DL Companies
Fax: 203-639-8384

CC: **Michael Milne**
DPW Project Manager
Fax: 860-713-7261

SUBJECT: **Concrete Washes**

MESSAGE: The Architectural Drawings indicate cast-in-place concrete washes in various areas however the Structural Drawings show the wash precast into the tee sections in some areas, specifically Sections 12/S2.04 and 17/S2.04. The Architectural plans show concrete washes in these same areas specifically along column lines "A" & "C". Kindly clarify.

RESPONSE:

Architectural drawing show location of Concrete Washes. Typical there cast after the precast is set.

CC:

Contractor: MPCC CORP.
By: **Ralph DeMasi**, Chief Estimator

Manafort Brothers Inc

414 New Britain Avenue
Plainville, CT 06062

Ph: 860.229.4853
Fax: 860.747.4861
Toll Free: 1.888.MANAFORT

www.manafort.com

Corporate Facsimile Transmittal Sheet

TO: Architect/Engineer	**FROM:** Bill Lange (Direct Line: (860) 793-6454) Email: wlange@manafort.com
COMPANY: BL Companies	**DATE:** 5/28/2010
FAX NUMBER: (203)-639-8384	**TOTAL # OF PAGES INCLUDING COVER:** 1
PHONE NUMBER:	**SENDER'S REFERENCE NUMBER:** RFI #1
RE: DIVISION #2 - SITE WORK SCSU Parking Garage (CF-RS-273)	**YOUR REFERENCE NUMBER:**

☐ Urgent ☐ For Review ☐ Please Comment X Please Reply

What style are the tops for the on-site catch basins?

Are they standard DOT galvanized tops (Drawing DN-4)??

Are they standard city of New Haven tops (Drawing DN-6)??

Is there a specification section for structures?

BL Response:
All CB's onsite shall be standard ConnDOT. ConnDot standard Structures are required.

The information contai... rsonal and confidential use of the designated ... / agent responsible for delivering it to the int... and that any review, dissemination, distribution or copying of this message is strictly prohibited. If you have received this communication in error, please notify us immediately by telephone and return the original message to us by mail. Thank you.

an Equal opportunity Employer m/f/h/v

O&G INDUSTRIES, INC.

David R. Longo

112 WALL STREET - TORRINGTON, CT 06790
PHONE (860) 489-9261 - FAX (860) 496-4227

TELECOPY MESSAGE

DATE: May 27, 2010

ATTENTION: BL Companies / Michael Milne, DPW / Mellanee Walton, DPW
FAX NUMBER: 203-639-8384 / 860-713-7261 / 860-713-7395

REGARDING: ***IMPORTANT!***
SCSU LOT # 7 PARKING GARAGE / PROJECT NO.: CF-RS-273
RFI's / Bid Questions [2nd Set] IMPORTANT!

Please see below for additional RFI / Bid Questions regarding the above project.

19 Drawings note 1" conduit for lighting. Specifications as well as the general drawing notes call for ¾". Please clarify.

20. We have been asked by two curtain wall contractors if they will be allowed to attach/fasten the curtain wall to the side of the stairs when it is not hitting the floor slabs. Please advise.

21. As a follow up note to the UI Utility Pole/Service Relocation question discussed at the prebid, we have contacted both the Head of Construction Services and the U/G Field Coordinator from UI. While both know about the project, neither is aware of UI pricing being prepared for the bid.

22. Section 071700 – Bentonite Waterproofing does not describe where it is to be applied and it does not appear to show on the drawings. Where is this intended to be applied?

23. Under Specification 034100 Plant Precast Structural Concrete you list three fabricators for the parking garage. Dailey (William E.) Precast located in Shaftsbury, VT is interested in providing a bid for this division of work.Will you approve them as an acceptable 034100 fabricator? Contact for questions or references is as follows:
William E. Dailey Precast LLC / 295 Airport Road / Shaftsbury, VT 05262
Jim Altland, 802.442.4416, x-252, jalt@daileyprecast.com / www.daileyprecast.com

Thank you for your time and consideration,

David R. Longo

Senior Estimator
O&G Industries, Inc.
860-489-9261
860-496-422y, fax
<davidlongo@ogind.com>

THERE ARE A TOTAL OF 1 PAGES, INCLUDING THIS COVER SHEET.

IF YOU DO NOT RECEIVE ALL PAGES CLEARLY, PLEASE CALL ME AT (860) 489-9261.

SCSU LOT #7 PARKING GARAGE
PROJECT NO. CF-RS-273
RFI'S / BID QUESTIONS RESPONSE:

DATE: 6/2/10

ATTENTION: O&G Industries, Inc

DISTRIBUTION:

PREPARED BY: Todd Johnson T: Ext.:

EMAIL: TJohnson@blcompanies.com

PROJECT NAME: SCSU PROJECT NUMBER: CR-RS-273

SUBJECT: RRFI / Bid Questions O&G Industries, Inc

19. 1" Conduit is required.
20. The Curtain wall can be fastened to the Precast stair's as long as the curtain wall suppliers provide loads to the Precast Concrete Provider during there shop drawing phase.
21. Refer to Addendum #4 (Response to RFI's)
22. Refer to Addendum #4 (Response to RFI's)
23. Refer to Addendum #4 (Response to RFI's)

ARCHITECTURE

ENGINEERING

PLANNING

LANDSCAPE ARCHITECTURE

LAND SURVEYING

ENVIRONMENTAL SCIENCES

355 Research Parkway
Meriden, Connecticut
06450

800.301.3077 T
203.630.1406 T
203.630.2615 F

blcompanies.com

Viking Construction, Inc.
General Contractors • Construction Managers
1387 Seaview Avenue, Bridgeport, CT 06607
Voice (203) 353-0260 • Fax (203) 353-0750
Estimating Fax (203) 406-2167
www.vikingconstruction.net

Fax

Date:	05/26/2010		
Company:	BL Companies	&	DPW
Attn:	Project Manager	&	Michael Milne
Fax Number:	203 639 8384		860 713 7261
From:	David Heer Email: david.heer@vikingconstruction.net		
Subject:	SCSU Parking Garage Lot # 7 – VRFI #1		

Number of Pages, including cover sheet: 1

A copy of the attached documents will also be delivered to you: Yes [ ] No [x]

Please clarify the following.

1. Reference drawing GU1 regarding the relocation of overhead wires, and utility poles by UI. We request an allowance be used for this work until contract award and UI has provided the cost of this work.

2. Reference drawing GU1 regarding the add alternate for the sanitary lateral. Please provide the alternate number for this work if it is to remain an alternate.

BL Response:
1. Refer to Addendum #4 (Response to RFI's)
2. This is part of Supplemental Bid #2.

GIORDANO
Construction Managers and General Contractors
1155 Main Street
Branford, CT 06405
Phone 203-488-7264 FAX 203-481-5764

FAX

Date: 5-27-10
To: BL Companies
Company:
From: Bedrich Hajek
RE: SCSU - Parking Garage CF-RS-273

1. Specification Section 033000 2.03 Materials K. Fibrous Reinforcement - Where is this required? What is the lbs per cubic yard required?

2. Specification Section 033000 2.03 Materials M. Barrier 1 - Where is this required? What is the dosage rate required?

3. Is any reinforcement in the parking garage required to be epoxy coated?

4. Note 19 on S1.01 and most details on S2.01 show and/or mention precast anchor rods. Please provide drawings and quantities of the precast anchor rods. Please also confirm that these will be provided by the precast supplier.

5. Please provide drawings and quantities of any additional embedded items required by the precaster such as weld plates, etc.

Number of pages including cover sheet: 1

Receiver's FAX number: 203-639-8384

BL Companies

SCSU LOT #7 PARKING GARAGE
PROJECT NO. CF-RS-273
RFI'S / BID QUESTIONS RESPONSE:

DATE: 6/2/10

ATTENTION: Giordano

DISTRIBUTION:

PREPARED BY: Todd Johnson T: Ext.:

EMAIL: TJohnson@blcompanies.com

PROJECT NAME: SCSU PROJECT NUMBER: CR-RS-273

SUBJECT: RRFI / Bid Questions Giordao

1. Refer to Addendum #4 (Response to RFI's)
2. Refer to Addendum #4 (Response to RFI's)
3. No
4. Needs to be coordinated with selected precaster . Not 19 on S1.01 confirms this.
5. Needs to be coordinated with selected precaster.

ARCHITECTURE

ENGINEERING

PLANNING

LANDSCAPE ARCHITECTURE

LAND SURVEYING

ENVIRONMENTAL SCIENCES

355 Research Parkway
Meriden, Connecticut
06450

800.301.3077 T
203.630.1406 T
203.630.2615 F

blcompanies.com

REQUEST FOR INFORMATION

From: Worth Construction Co., nc.
24 Taylor Avenue
Bethel, CT 06801
(203) 797-8788
(203) 791-2515 FAX

WCCI RFI No. 011

To: **BL COMPANIES** Fax No.: **(203) 639-8384**

To: **DPW – STATE OF CONNECTICUT**
Attn: **Michael Milne** Fax No.: **(860) 713-7261**

Date: **May 25, 2010**

Project: **SCSU PARKING GARAGE LOT #7**
New Haven, Connecticut

Spec. Section: NA **Drawing Reference: DN-2**

INFORMATION REQUESTED: Drawing DN-2 details the detectable warning surface to be used at ADA sidewalk ramps. Note 3 on DN-2, states to use Spec 921001A. Please provide this spec, the manufacturer and product information.

Signed: Louis S. DiGaetano

Response Date: 6/2/10 Respondent: Todd Johnson

RESPONSE:

City of New Haven Specifications can be found on the City of New Webs site under Download City Technical & Material Specifications.

cc: RFI Log

REMINDER

All 81/2 X 11 pages of an Addendum will be on our web site @

www.ct.gov/dpw

The drawings will be sent separately.

Under the Invitation to Bid click on the Construction Project Bids. Then click on the Addendum Number you are looking for.

This is part of Addendum #4

SOUTHERN CONNECTICUT STATE UNIVERSITY
LOT #7 PARKING GARAGE
NEW HAVEN, CONNECTICUT
PROJECT: CF- RS - 273

BID OPENING	**1:00 P.M.**	**JUNE 16, 2010**
ADDENDUM NUMBER 4	**DATE OF ADDENDUM**	**JUNE 2, 2010**

The following clarifications are applicable to drawings and specifications for the project referenced above.

Item 1

Please replace Section 00 41 00, Bid Proposal Form in its entirety and us the attached Section 00 41 00, Bid Proposal Form in its entirety when bidding on this project.

Item 2

Replace drawings previously issued for bidding with the following:
A2.01, A3.02, A7.01, A8.01, A12.08, E0.01, EL1.05 and EP2.01

Item 3

The following sketches are included:
ASK-1 (Clarification on curtain wall color and finish) Modifies General Notes on A5.02 & A5.03
ASK-2 (ADD: Wheel Stops at the end of all internal Handicapped parking spaces, typical). Modifies drawing A8.06, Key's into drawings A1.01 – A1.03
ASK-3 (Revised expansion joint model numbers – ZB(C/S Group) and LMS (MM Systems). Modifies drawing A9.02

Item 4

Delete drawing sheet EL1.04 from the construction documents.

Item 5

Delete Section 01 20 00 Contract Considerations
Insert new Section 01 20 00 Contract Considerations (Addition of Allowances)

Item 6

Delete Section: 01 26 00 Contract Modification Procedures Pages 1 through 8
Insert new Sections:
01 25 00 Substitution Procedures
01 26 00 Contract Modification Procedures

Item 7

In Section 033000, Paragraph 2.03 Delete Sub-Paragraph M. Concrete Moister-proofing Admixtures.

Item 8

In Section 055000, Paragraph 2.08
DELETE: Sub Paragraph B in its entirety.

Item 9

In Section 074113 Paragraph A.1.b. Add Sno-Barricade by Sno- Gem, Inc see attached approved Equal or Substituted Product Request for Sno-Barricade snow guards. See attached Substitute Product Request.

Item 10

Delete specification section 265600 Exterior Lighting.
Replace with new specification section 265600 Exterior Lighting Dated 5/26/10.

Item 11

In Section 312000, Paragraph 2.3C Remove the fourth sentence "This material may also be used under footings or building concrete slab-on grade and slabs on grade."

Item 12

Attached is RCMS Controls, Inc. Scope of work and Pricing.

Item 13

See attached responses of Contractor RFI's

All questions must be in writing (not phone or e-mail) and must be forwarded to the consulting Architect/Engineer (Scott Pellman fax 203-639-8384) with copies sent to the DPW Project Manager (Michael Milne fax 860 713-7261)

End of Addendum Number Three

Mellanee Walton
Associate Fiscal Administrative Officer
Department of Public Works

THRESHOLD BUILDING

FOR PROJECTS ESTIMATED TO COST MORE THAN $500,000.00

STATE OF CONNECTICUT
DEPARTMENT OF PUBLIC WORKS
BID PROPOSAL FORM

DATE: _____

PROPOSAL OF _____
BIDDER'S LEGAL COMPANY NAME

_____

_____
BIDDER'S ADDRESS

To the Commissioner, Department of Public Works
State Office Building
Hartford, Connecticut

Dear Sir:

1.0 In accordance with Chapter 60 Part II of the Connecticut General Statutes, as amended, and pursuant to, and in compliance with your Invitation to Bid, the Notice to Bidders, the Contract, including the conditions thereto, the Bid Security, I (we) propose to furnish the labor and/or materials, installed as required for the project named and numbered on this Bid Proposal Form, submitted herein, furnishing all necessary equipment, machinery, tools, labor and other means of construction, and all materials specified in the manner and at the time prescribed strictly in accordance with the provisions of the Contract including, but not limited to, the specifications and/or drawings together with all addenda issued by your authority and received prior to the scheduled closing time for the receipt of the bids, and in conformity with requirements of the Awarding Authority and any laws or Departmental regulations of the State of Connecticut or of the United States which may affect the same, for and in consideration of the price(s) stated on the said Bid Proposal Form, hereof.

2.0 The **Lump Sum Base Bid** by me (us) on the Bid Proposal Form *includes* all work indicated on the drawings and/or described in the specifications, except:

2.1 Work covered by **Supplemental Bids** as may be listed on the Bid Proposal Form and General Requirements.

2.2 Contingent Work covered by the **Unit Prices** included within the **General Requirements**.

2.3 Contingent Work covered by the **Contractor Provided Unit Prices** as may be listed on the **Bid Proposal Form** in Section 00 41 00, Item 7.7.

3.0 I (we) *acknowledge* and *agree* to the following:

3.1 To use and accept the **Contractor Provided Unit Prices** on the **Bid Proposal Form**, Section 00 41 00, Item 7.7, as provided by the Contractor in evaluating either additions to or deductions from the Work.

3.2 To use and accept the **Unit Prices** in Section 01 20 00 "Contract Considerations" Division 1 as provided by the Owner in evaluating either additions to or deductions from the Work.

3.3 To use and accept the **Allowances** in Section 01 20 00 "Contract Considerations" Division 1, as part of the Total Contract Sum as listed in Section 7.3 of this Bid Proposal form.

3.4 To use and accept the **Supplemental Bids** in Section 01 23 13, Division 1, as provided by the Contractor, when authorized by the Owner as scheduled in Section 7.6 of this Bid proposal form.

3.5 To complete and submit a **Contractor/Consultant Certification** along with a **Resolution/Certificate of Authority** for contracts with a value of $50,000 or more when requested in the **Letter of Intent**.

DPW Website location http://www.ct.gov/dpw/cwp/view.asp?a=1983&q=289926

This certification must be *updated* **annually** by the *successful* bidder. **Annually**, on *or* within two (2) weeks of the **anniversary** date of the execution of this contract, the Contractor shall submit a completed **Annual Certification** with authorizing resolution to DPW, 165 Capitol Ave., Room G-35, Hartford, CT 06106. For the purposes of this paragraph, the **execution date** of the contract will be the date the Commissioner of DPW signs the contract.

3.6 To hold the bid price for ninety (90) calendar days and any extensions caused by the Contractor's delays in required submissions. The Contractor and the State may mutually agree to extend this period. The agreement to extend the 90-day period may occur after the expiration of the original 90-day period.

The apparent low bidder is required to submit key supporting documents as noted under the caption **Bid Submittal Time Line** at the end of this Section 00 41 00, within ten (10) calendar days of the bid opening, and to submit their Affirmative Action Plan to CHRO within fifteen (15) calendar days of bid opening. If there are any delays in the receipt of these materials then the Bid shall remain valid for the same additional number of days. For example, if the materials are submitted four (4) days later; then the bid shall remain valid for ninety-four (94) days.

3.7 With regard to a State contract as defined in **P.A. 07-01** having a value in a calendar year of $50,000 or more or a combination or series of such **agreements** or **contracts** having a value of $100,000 or more, the **authorized signatory** to this **submission** in response to the State's solicitation expressly **acknowledges receipt** of the **State Election Enforcement Commission's notice** advising prospective state

contractors of the state campaign contribution and solicitation prohibitions, and will inform its principals of the contents of the **notice**. See Attachment **SEEC Form 10 and 11**.

3.8 To comply with the Department of Correction's **Security Regulations For Contract Forces**, Section 00 73 63.

4.0 This Bid Proposal Form is submitted to and in compliance with the foregoing and following conditions and/or information:

4.1 AWARD

4.1.1 All proposals shall be subject to provisions of **Article 1 of the Notice to Bidders** and for purpose of award, consideration shall be given only to Bid Proposals submitted by qualified and responsible bidders.

4.1.2 The award shall be made on the **lowest Lump Sum Bid** as stated in Section 7.3 of this Bid Proposal Form and any or all **Supplemental Bids** as stated in Section 7.6 of this **Bid Proposal Form**, taken sequentially, as applicable, provided funds are available.

4.1.3 In the event of any **discrepancy** between the amount written in words and the amount written in numerical figures, the amount written in words shall be controlling.

4.2 COMMENCEMENT AND ACCEPTANCE (ARTICLE 4 GENERAL CONDITIONS)

4.2.1 The General Contractor shall commence Work within **fourteen** (14) **calendar days** *after* receiving "Construction Start Date and Notice To Proceed" by the Commissioner or the authorized representative and continue for Four Hundred Fifty Five **(455)** calendar days for completion of the project.

4.3 LIQUIDATED DAMAGES: (ARTICLE 8, GENERAL CONDITIONS)

4.3.1 The General Contractor shall be assessed **$1,783.**00 per day for each calendar day *beyond* the Date established for Substantial Completion of the Contract according to the **Contract Time** as defined in Article 1.28 of the General Conditions, and not otherwise excused or waived pursuant to the Contract Documents, as defined in Article 1.23 of the General Conditions.

4.3.2 The General Contractor shall be assessed **$1,783.00** per day for each calendar day *beyond* ninety (90) days *after* the date of said Substantial Completion that the Contractor fails to achieve **Acceptance**, as defined in Article 1.1 of the General Conditions and not otherwise excused or waived as described above.

4.4 CONTRACTOR'S INSURANCE REQUIRED: (ARTICLE 35, GENERAL CONDITIONS)

4.4.1 The **limits of liability** for the Insurance required for this project shall be those listed in Article 35 of the General Conditions.

4.4.2 SPECIAL HAZARDS INSURANCE REQUIRED:

Type "X", "C", "U" – Explosion, Collapse, Underground in accordance with Article 35 of the General Conditions.

4.4.3 BUILDERS RISK INSURANCE

The General Contractor shall maintain Builder's Risk insurance providing coverage for the entire Work at the project site, and shall also cover portions of the Work located away from the site but intended for use at the site, and shall also cover portions of the Work in transit. Coverage shall be written on an All-Risk, Replacement Cost, and completed Value Form basis in an amount at least equal to the projected completed value of the Work and the policy shall state that it is for the benefit of and payable to the state of Connecticut.

4.5 **NOT USED**

4.6 The General Contractor on this project shall be required to award not less than **25%** of the total Contract Sum to contractors who are certified and eligible to participate under The State of Connecticut Set-Aside Program for **small** contractors, including **6.25%** to certified and eligible **Minority Business Enterprises**, in accordance with Connecticut General Statutes Section 4a-60g.

4.6.1 This requirement *must be met even if* the **General Contractor** is *certified* and *eligible* to participate in the **Small Business Set-Aside Program**. To facilitate compliance with this requirement for set-aside subcontractors, the three (3) **apparent low bidders** will have ten (10) calendar days from the date of bid opening within which to submit a **list of certified set-aside contractors** to be used on this project along with the **dollar amounts** to be paid to each, on the form provided, and a copy of their **current certification** must be attached. This information will be considered as part of your Bid Proposal Form and **failure** to comply with any portion of this requirement within the ten (10) days, including but not limited to **failure** to list or meet the necessary dollar amount or percentage of the bid price will be cause to **reject** your bid.

4.7 BIDDER'S QUALIFICATION STATEMENT AND OBJECTIVE CRITERIA FOR EVALUATING QUALIFICATIONS OF BIDDERS:

4.7.1 Information in regards to the General Contractor's and the Named Subcontractor's Bidder's Qualification is submitted and is made part of this Bid Proposal Form. **Note: Individual Specification Sections may contain General Contractor and/or Subcontractor Qualification requirements that exceed**

those in Section 00 45 15, "Objective Criteria Established for Evaluating Qualifications of Bidders."

4.7.1.1 The **General Contractor** is required to complete the **General Contractor Bidder's Qualification Statement** in section 00 45 14.

4.7.1.2 Any **Named Subcontractor** as listed in schedule 7.5.1 of this Bid Proposal Form is required to complete the **Named Subcontractor Bidder's Qualification Statement** in section 00 45 17. To facilitate compliance with this requirement, the three (3) apparent low bidders will have **ten** (10) calendar days, from the bid opening date, to submit the completed Named Subcontractor Bidder's Qualification Statement as required in section 00 45 17. This information will be considered as part of your Bid Proposal Form and failure to comply with any portion of this requirement will be **cause to reject** your bid.

4.7.2 The **Objective Criteria for Evaluating Bidders** that are included in Division 0, Section 00 45 15, of this Project Manual, is to assure that the State of Connecticut will secure the "lowest responsible and qualified bidder" who has the ability and capacity to successfully complete the Bid Proposal Form and the Work.

4.8 NONDISCRIMINATION AND LABOR RECRUITMENT:

4.8.1 The Contract is subject to the provisions of Executive Order No. Three of Governor Thomas J. Meskill, promulgated June 16, 1971, concerning labor employment practices, Executive Order No. Seventeen of Governor Thomas J. Meskill, promulgated February 15, 1973, concerning the listing of employment openings and Executive Order No. Sixteen of Governor John G. Rowland promulgated August 4, 1999, concerning violence in the workplace, all of which are incorporated into and are made a part of the Contract as if they had been fully set forth in it. At the Contractor's request, the Client Agency shall provide a copy of these orders to the Contractor. The Contract may also be subject to Executive Order No. 7C of Governor M. Jodi Rell, promulgated July 13, 2006, concerning contracting reforms and Executive Order No. 14 of Governor M. Jodi Rell, promulgated April 17, 2006, concerning procurement of cleaning products and services, in accordance with their respective terms and conditions.

4.9 FEDERAL & STATE WAGE DETERMINATIONS:

4.9.1 The U. S. Secretary of Labor's latest decision and the State of Connecticut Wage Schedule are all incorporated in the documents. The higher rate (Federal or State) for any given occupation shall prevail. At the time of bidding, the bidder agrees to accept the current prevailing wage scale, as well as the annual adjustment to the prevailing wage scale, as provided by the Connecticut Department of Labor.

4.10 CERTIFICATION OF BIDDER REGARDING EQUAL EMPLOYMENT OPPORTUNITY & NON-SEGREGATED FACILITIES:

4.10.1 The General Contractor and Subcontractors are hereby advised that upon acceptance of their bids they are obligated to fill out within seven (7) calendar days the certification required pursuant to Executive Order No. 11246, and agree to certify to the compliance of non-segregated facilities.

4.11 EQUALS AND SUBSTITUTION REQUESTS PROCEDURES:

4.11.1 All submissions requesting "Equals and/or Substitutions" shall be made by the **Contractor** in accordance with **Article 15** of the **General Conditions** and **Section 01 25 00** of the **General Requirements**. All submissions shall contain all the information necessary for the Department of Public Works to evaluate the submission and the request. Failure to submit sufficient information to make a proper evaluation, including submittal of data for the first manufacturer listed as well as the data for the "Equals and/or Substitutions" proposed, shall result in a **rejection** of the submission and request. Upon receipt of the submission and request the Department of Public Works shall notify the Contractor the request has been received and as soon as possible shall render a decision on such submission and request.

4.11.2 **Pre-Bid Opening Substitution of Materials and Equipment:** The Owner will consider requests for equals or substitutions *if* received **fourteen** (14) days *prior* to the **Bid Opening**. The **Equal or Substitute Product Request Form 701** must be used to submit request. This **form** may be found in the **DPW Website**.

4.11.3 Request for Equal or Substitution shall be submitted to the **DPW Project Manager and Architect or Engineer**.

4.11.4 Any substitution request not complying with requirements will be denied. Substitution request sent *after* the **deadline** will be denied.

4.11.5 An **Addendum** shall be issued to inform all prospective bidder of any accepted substitution in accordance with our addenda procedures.

4.11.6 No extension of time will be allowed for the time period required for consideration of any Substitution or Equal.

4.11.7 **Post Contract Award Substitution Of Materials And Equipment:** All Requests For "Equals And Substitutions" *after* the Award of the Contract shall be made *only* by the **General Contractor** in accordance with Article 15, Materials: Standards, Section 00 72 00 General Conditions Of The Contract For Construction.

5.0 ACCOMPANYING THIS PROPOSAL IS:

5.1 A CERTIFIED CHECK drawn to the order of – Treasurer, State of Connecticut, in the which it is understood shall be cashed and the proceeds thereof used so far as may be necessary to reimburse the State of Connecticut for losses and damages arising by virtue

of my (our) failure to file the required Bonds and execute the required contract if this proposal is accepted by the Awarding Authority.

OR

5.2 A BID BOND having as surety thereto a Surety Company or Companies authorized to transact business in the State of Connecticut and made out in the penal sum of 10% of the bid.

5.3 GIFT AND CAMPAIGN CONTRIBUTION CERTIFICATE AT TIME OF CONTRACT EXECUTION

5.4 A DEPARTMENT OF ADMINISTRATIVE SERVICES (DAS) CONTRACTOR PRE-QUALIFICATION CERTIFICATE

The DAS Prequalification Certificate is required for projects estimated to exceed $500,000.00 (C.G.S. 4b-91 as amended)

5.5 A DEPARTMENT OF ADMINISTRATIVE SERVICES (DAS) UPDATE STATEMENT

The DAS Update Statement is required for projects estimated to exceed $500,000.00 (C.G.S. 4b-91 as amended)

5.6 CHECKLIST OF INCLUDED ITEMS WITH BID PROPOSAL AT TIME OF BID PROPOSAL SUBMITTAL

	IMPORTANT:	
Item	A. All forms below must be included when you submit your bid package.	**Section**
	B. Failure to submit any of items marked below with an **asterisk** (*) shall cause rejection of the bid and shall not be considered a minor irregularity under CGS 4b-95.	
1 *	**Bid Proposal Form***	00 41 00
2 *	Appropriate Resolution or **Certificate** (of authority*)	00 40 14
3 *	**Ethics Affidavit (Regarding State Ethics)** (New July 1, 2005)*	00 40 14
4 *	Department of Administrative Services **Pre-qualification Certificate***	00 40 15
5 *	Department of Administrative Services **Update Statement** *	00 40 15
6 *	**Standard Bid Bond** or Certified Check*	00 43 16
7	**General Contractor Bidder's Qualification Statement**	00 45 14

6.0 I (we), the undersigned, hereby declare that I am (we are) the only person(s) interested in the Bid Proposal and that it is made without any connection with any other person making any Bid Proposal for the same work. No person acting for, or employed by, the State of Connecticut is directly or indirectly interested in this Bid Proposal, or in any Contract which may be made under it, or in expected profits to arise therefrom. This Bid Proposal is made without directly or indirectly influencing or attempting to influence any other person or corporation to bid or refrain

from bidding or to influence the amount of the Bid Proposal of any other person or corporation. This Bid Proposal is made in good faith without collusion or connection with any other person bidding for the same work and this proposal is made with distinct reference and relation to the plans and specifications prepared for this Contract. I (we) further declare that in regard to the conditions affecting the Work to be done and the labor and materials needed, this Bid Proposal is based solely on my (our) own investigation and research and not in reliance upon any representations of any employee, officer or agent of the State.

7.0 Each **class of Work** set forth in a separate section of the specifications pursuant to this Section shall be a **subtrade** designated in Schedule 7.5.1 of this Bid Proposal Form and shall be the matter of a **subcontract** made in accordance with the procedure set forth in this chapter.

7.1 The undersigned proposes to furnish all labor and materials required for

Project Number: CF-RS-273
Project Title: Southern Connecticut State University
Lot #7 Parking Garage
New Haven, CT

in accordance with the accompanying Plans and Specifications

Prepared by: BL Companies
355 Research Parkway
Meriden, CT

Engineer/Architect

for the Contract Sum specified in Section 7.3 subject to **additions** and **deductions** according to the terms of the specifications.

7.2 This Bid Proposal includes _____ number of **Addenda/Addendum.**

7.2.1 The **Contractor is to fill in item 7.2 above**, acknowledging the number of Addenda that the Contractor is including in the Bid Proposal Form. Failure to acknowledge all **addenda** in the space provided in the Bid Proposal Form shall be cause for **rejection** of the bid.

7.3 **THE PROPOSED CONTRACT PRICE IS AS FOLLOWS:**

$ [ ][ ] , [ ][ ][ ] , [ ][ ][ ] . [ ][ ]

(Place figures in appropriate boxes.)

_____ DOLLARS

(Written Amount)

7.3.1 In Accordance With Section 4.6 Not Less Than **25%** Of This Total Must be Awarded to Certified **Set-Aside** Contractors, including **6.25% Minority Business Enterprises**. **Failure** to Meet This Requirement Will Be Cause To **Reject** Your Bid.

7.4. **NOT USED**

7.5 Subcontractors and their price must be listed for the trades identified in Schedule 7.5.1.

FAILURE TO PROPERLY COMPLETE THIS SECTION ACCORDING TO THE BELOW INSTRUCTIONS SHALL RESULT IN REJECTION OF THE BID.

SCHEDULE 7.5.1 – NAMED SUBCONTRACTORS

	Description	Name of Subcontractor	Amount Dollars	Labor & Material Payment Bond	Performance Bond	State of CT D.C.P. License/ Registration No. Format: Prefix - No. - Suffix
1.	Electrical		$	%	%	
2.	Mechanical* * Includes (Plumbing, etc …) *except* HVAC		$	%	%	
3.	HVAC** **HVAC (includes all controls)		$	%	%	
4.	Masonry		$	%	%	
5.	Precast Structural Concrete		$	%	%	
6.	Sprinkler		$	%	%	

On and after October 1, 2007, no person whose **subcontract** *exceeds* five hundred thousand dollars in value may perform work as a **subcontractor** on a project estimated to cost more than five hundred thousand dollars, unless the person is **prequalified** in accordance with section 4a-100, as amended by **Public Act 06-134**.

7.5.2 List the *name* and *price* of each **Named Subcontractor** that will perform the **work** of the trades *listed* in **Schedule 7.5.1**.

7.5.3 The **General Contractor** *may* list **itself** together with its **price (failure to provide both will be cause for rejection),** *if* it customarily performs any of the trades specified. *If* the General Contractor leaves the spaces for a specific "Trade Description" *completely blank*, it will be *assumed* that the General Contractor will perform that Work.

7.5.4 *If* the General Contractor requires a **Performance** and/or **Labor and Material Payment Bond**, *then* the General Contractor must indicate in Schedule 7.5.1 which of the Named Subcontractors are subject to this requirement. The amount (%) shall not exceed the Named Subcontractor's price listed in Schedule 7.5.1.

7.5.5 The undersigned *agrees* that each of the **Named Subcontractors** listed in Schedule 7.5.1 of the Bid Proposal Form will be used for the **Work** indicated at the **amount stated**, *unless* a **substitution** is permitted by the awarding authority as provided for in section 00 21 19 Notice to Bidders.

7.6 Any **Supplemental Bids** listed in schedule 7.6.1, *if* accepted by the Owner, will be taken cumulatively and in numerical order as scheduled. No Supplemental Bid will be skipped or taken out of numerical order as scheduled. Supplemental Bids: Division 1, Section 01 23 13 of the **General Requirements** identify and describe the Supplemental Bids as shown in Schedule 7.6.1.

SCHEDULE 7.6.1 – SUPPLEMENTAL BIDS			
Supplemental Bid No.: 1	Provide all labor, material and equipment to complete the Work in accordance with Division 1, Section 01 23 13.		
ADD:	_____ (Written Amount)	Dollars	$ _____ .
Supplemental Bid No.: 2	Provide all labor, material and equipment to complete the Work in accordance with Division 1, Section 01 23 13.		
ADD:	_____ (Written Amount)	Dollars	$ _____ .
Supplemental Bid No.: 3	Provide all labor, material and equipment to complete the Work in accordance with Division 1, Section 01 23 13.		
ADD:	_____ (Written Amount)	Dollars	$ _____ .

7.7 **Contractor Provided Unit Prices** are not needed for this project.

7.8 The **undersigned** agrees that *if* selected as the General Contractor, I (we) shall, within **seven** (7) calendar days (legal State holidays excluded) *after* notification thereof by the awarding authority, *execute* a **Contract** in accordance with the terms of this Bid Proposal Form and Contract.

7.9 The undersigned agrees and warrants that they have made **good faith efforts** to employ **minority business enterprises** as **Subcontractors** and **suppliers** of materials under such Contract and shall provide the Commission on Human Rights and Opportunities with such information as is requested by the Commission concerning their **employment practices and procedures** as they relate to the current provisions of the Connecticut General Statutes governing Contract requirements.

7.10 This project is a "Threshold Building" and subject to all Statutory provisions as stated in Amendment No. 2 of the specifications Section 00 92 00 article 2.1.

8.0 CONFIDENTIALITY OF DOCUMENTS

8.01 The **undersigned** agrees that if not selected as the General Contractor for this project, all plans and specifications in their possession for the project shall be destroyed.

8.02 The **undersigned** agrees that if selected as the General Contractor for this project:

8.02.1 The **plans and specifications** shall not be disseminated to anyone except for construction of this project.

8.02.2 The following **provision** shall be included in all of its contracts with subcontractors and sub-consultants:

> Any and all drawings, specifications, maps, reports, records or other documents associated with the contract shall only be utilized to the extent necessary for the performance of the work and duties under this contract. Said drawings, specifications, maps, reports, records and other documents may not be released to any other entity or person except for the sole purpose of the work described in this contract. No other disclosure shall be permitted without the prior written consent of the Department of Public Works. When any such drawings, specifications, maps, reports, records or other documents are no longer needed, they shall be destroyed."

8.02.3 Upon completion of the construction and the issuance of a certificate of occupancy, the plans and specifications shall be returned to the Department of Public Works, or destroyed, or retained in a secure location and not released to anyone without first obtaining the permission of the Department of Public Works.

9.0 A duly authorized representative of the Bidder or Bidder's partnership, firm, corporation or business organization must sign all Bid Proposals Forms.

(NO FACSIMILE SIGNATURE IS PERMITTED).
ALL INFORMATION BELOW IS TO BE FILLED IN BY THE BIDDER.

Project Number _____

Firm Name _____
Complete BIDDER'S LEGAL COMPANY NAME

General Contractor's State of Connecticut, D.C.P. License/ Registration No. _____
(Applicable for Threshold Building projects only. Insert "N/A" if notapplicable. Refer to Item 7.10)

Firm Federal Employer Identification Number _____

Firm CT Tax Registration Number _____

Firm Address _____
Street City State Zip Code

Telephone Number _____

FAX Number _____

E-mail Address _____

Type of Business (check one):

____Corporation

____Limited Liability Corporation (**LLC**)

____Partnership

____Sole Proprietor

____Doing Business As (d/b/a), if yes, provide complete name **below:**

_____

_____

_____

Corporate Seal, *if* a Corporation

Provide Exact Wording on Corporate Seal **below**:

_____

_____

_____

This Bid Submission is **only** for Contractors who are **Certified** in the **DAS Prequalification Classification** noted in the **Invitation to Bid.**

A *Resolution/Certificate of Authority* must be submitted with your Bid Proposal.

Signed this _____ **day of** _____ **20** _____

Bidder's Signature _____ _____
Duly Authorized Title

_____ _____
Print Name Date

The apparent three low bidders are required to submit key supporting documents as noted on the following page within ten (10) calendar days of the bid opening, while the apparent low bidder is required to submit his Affirmative Action Plan to CHRO within fifteen (15) calendar days of bid opening. If there are any delays in the receipt of these materials then the Bids shall remain valid for the same additional number of days. For example, since, the apparent three low bidders are required to hold the bid price for ninety (90) calendar days and any extensions caused by the Contractor's delays in required submissions, if materials are submitted four (4) days later; then the bid shall remain valid for ninety-four (94) days.

Failure to meet the below stated deadlines may result in rejection of the bid at the sole discretion of the Commissioner of Public Works.

Bid Submittal Time Line

SUBMITTALS **DUE** WITHIN 10 CALENDAR DAYS **AFTER** BID OPENING
(From the Apparent **Three** Low Bidders):

1. Section 00 73 27 DPW Set-Aside Schedule:
2. Listing of certified set aside contractors Subs with name, address, amount and whether a subcontractor or a supplier or both
3. DAS Set-Aside Subcontractor Certificate of Eligibility (SBE's & MBE's)
4. Section 00 45 17 Named Subcontractor Bidder's Qualification Statements
5. Named Subcontractor's DAS Prequalification Certificate, when applicable

SUBMITTALS **DUE** WITHIN 15 CALENDAR DAYS **AFTER** BID OPENING
(From the **Apparent Low Bidder**):

1. Affirmative Action Plan to CHRO
2. Affirmative Action Plan Transmittal Letter Copy to DPW Procurement
3. Section 00 73 53 Affidavit for Certified Subcontractors as MBE's
4. Section 00 73 44 Wage Certification to DOL
5. On your letterhead, list of all named subcontractors, address and contact person
6. Scope Review conducted

SUBMITTALS **DUE** WITHIN 10 BUSINESS DAYS **AFTER** BOND COMMISSION FUNDING APPROVAL VIA EXPRESS/OVERNIGHT MAIL (From The **Apparent Low** Bidder):

1. Section 00 52 73 Subcontractor Agreements (Named & Listed)

SUBMITTALS **DUE** WITHIN 10 BUSINESS DAYS **AFTER** THE LETTER OF INTENT

1. Section 00 62 16 Insurance Certificate Form
2. Section 00 92 10 Performance Bond
3. Section 00 92 10 Labor & Material Bond

4. Section 00 92 10 Surety Sheet
5. Power of Attorney from the Surety Company
6. Section 00 40 14 Certificate of Authority/Resolution - Certificate
7. Asbestos Abatement Liability Insurance (for asbestos abatement only)
8. Motor Vehicle Pollution Liability for Asbestos Abatement (for asbestos abatement only)
9. Section 00 92 10 Non-Residents Certificate - DRS - Guarantee Bond (form AU-766)
10. Section 00 92 10 Bidder's Certificate: Financial Position & Corporate Structure
11. Section 00 52 03 Contract
12. Section 00 40 14 Affidavit Regarding State Ethics – for each Named Subcontractor
13. Section 00 40 14 Gift And Campaign Contribution Certification
14. Section 00 40 14 Consulting Agreement Affidavit
15. Certificate of Legal Existence from Corporations

END OF SECTION

GENERAL NOTES:

1. ALL EXTERIOR PRECAST CONCRETE TO HAVE A DARK PIGMENT ADDED TO STANDARD CEMENT.
2. * INDICATES EXTERIOR PRECAST CONCRETE ELEMENTS TO BE TOP OF PRECAST FORMS. SCREED, HAND SMOOTH AND PROVIDE A FINE SAND BLAST FINISH.
3. RUB ALL EXPOSED CAST-IN-PLACE CONCRETE SMOOTH.
4. ALL GLASS TO BE 1" CLEAR INSULATED - LOW E GLASS.
5. PROVIDE TEMPERED GLASS AS INDICATED "T" IN DRAWINGS.
6. ALL ALUMINUM CURTAIN WALL & STORE FRONT FRAMING TO BE BASED ON "KAWNEER" PERMADIZE COLOR STERLING GRAY.
7. STANDING SEAM METAL ROOF COLOR TO BE SELECTED FROM FULL ARCHITECTURAL RANGE.
8. INSULATED METAL PANEL TO BE 1⅛" THICK X 24" WIDE 22 GA. ALUMINUM - COLOR TO BE SELECTED FROM FULL ARCHITECTURAL RANGE.
9. ALL EXPOSED CAST-IN-PLACE CONCRETE SHALL HAVE A RUBBED FINISH.

2

DRAWINGS A5.02 & A5.03

STATE OF CONNECTICUT DEPARTMENT OF PUBLIC WORKS	DRAWING PREPARED BY: BL COMPANIES 355 RESEARCH PARKWAY MERIDEN, CONNECTICUT, 06450	date: 07/10/09 scale: AS NOTED
drawing title: PARTIAL BUILDING ELEVATIONS	project: 100% CONSTRUCTION DOCUMENTS PACKAGE SCSU PARKING GARAGE CF-RS-273	drawn by approved by
REVISIONS mark | date | description 2 | 5/26/10 | ISSUED FOR ADDENDA #4	CAD no. A07D1007502 project no. CF-RS-273	drawing no.: ASK-1

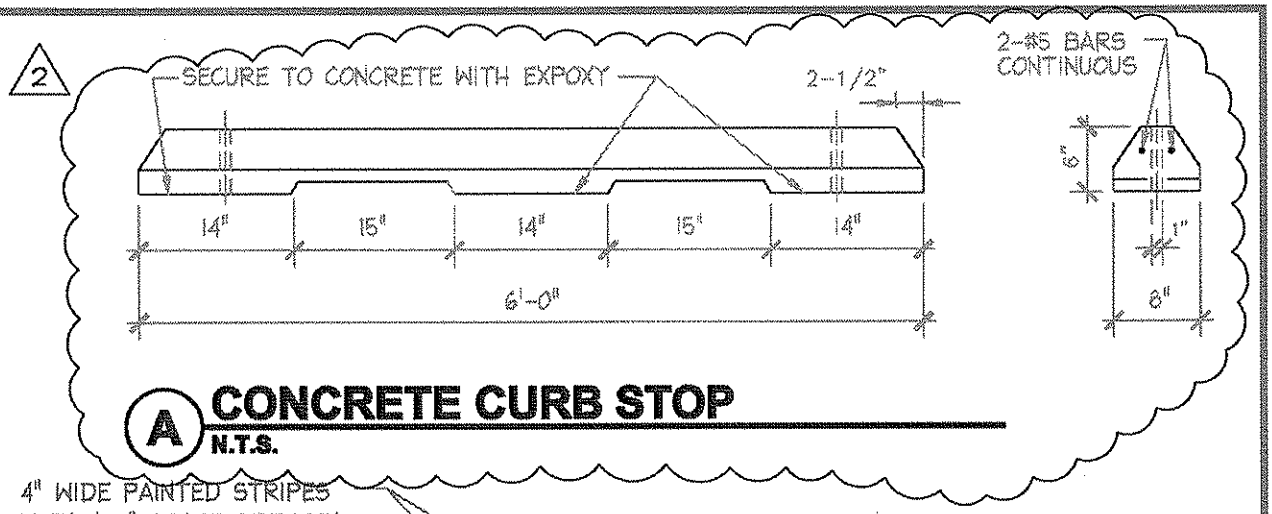

A CONCRETE CURB STOP
N.T.S.

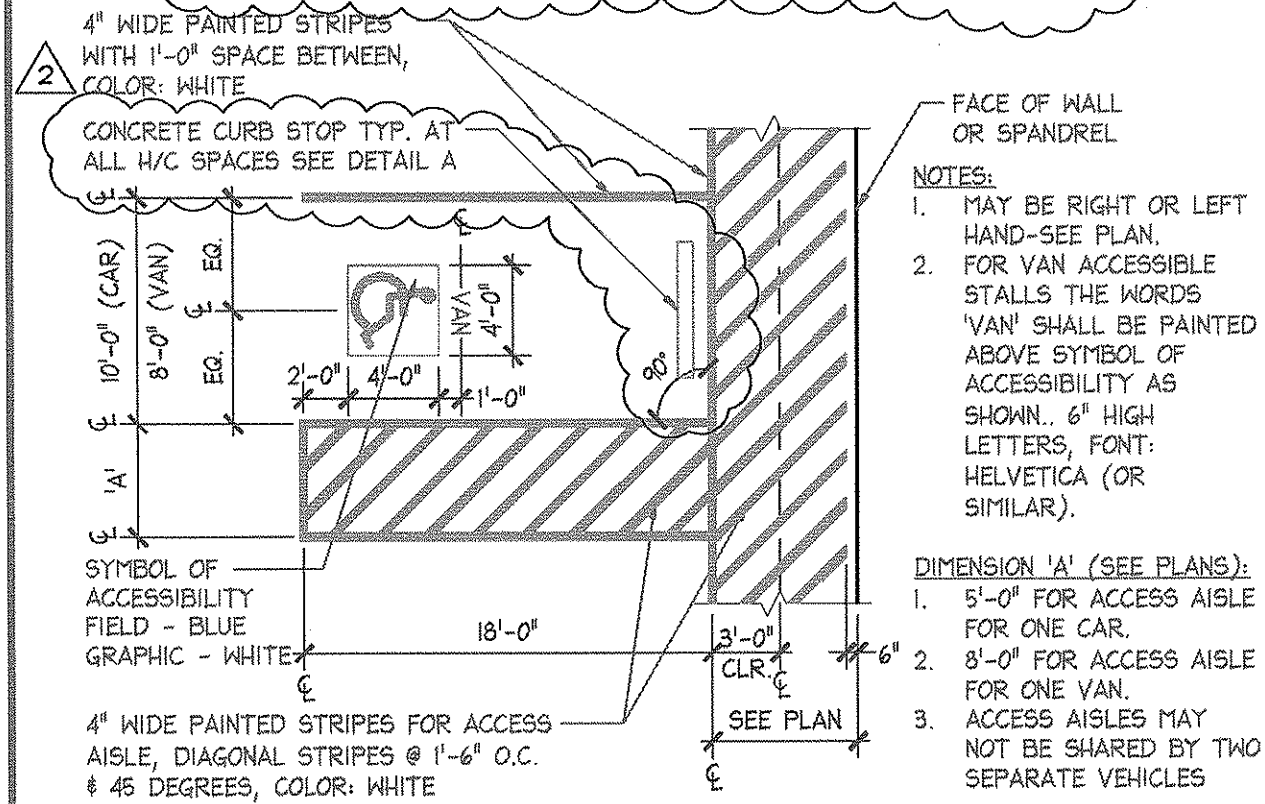

NOTES:
1. MAY BE RIGHT OR LEFT HAND-SEE PLAN.
2. FOR VAN ACCESSIBLE STALLS THE WORDS 'VAN' SHALL BE PAINTED ABOVE SYMBOL OF ACCESSIBILITY AS SHOWN.. 6" HIGH LETTERS, FONT: HELVETICA (OR SIMILAR).

DIMENSION 'A' (SEE PLANS):
1. 5'-0" FOR ACCESS AISLE FOR ONE CAR.
2. 8'-0" FOR ACCESS AISLE FOR ONE VAN.
3. ACCESS AISLES MAY NOT BE SHARED BY TWO SEPARATE VEHICLES

1 TYP. HANDICAPPED ACCESSIBLE PARKING STALL - PAINTING PLAN
1/8" = 1'-0"

STATE OF CONNECTICUT DEPARTMENT OF PUBLIC WORKS	DRAWING PREPARED BY: BL COMPANIES 355 RESEARCH PARKWAY MERIDEN, CONNECTICUT, 06450	date: 07/10/09 scale: AS NOTED
drawing title: PAINTING PLANS AND SIGNAGE TYPES	project: 100% CONSTRUCTION DOCUMENTS PACKAGE SCSU PARKING GARAGE CF-RS-273	drawn by: approved by:
REVISIONS mark: 2 | date: 5/26/10 | description: ISSUED FOR ADDENDA #4	CAD no.: A07D10071206-08 project no.: CF-RS-273	drawing no.: ASK-2

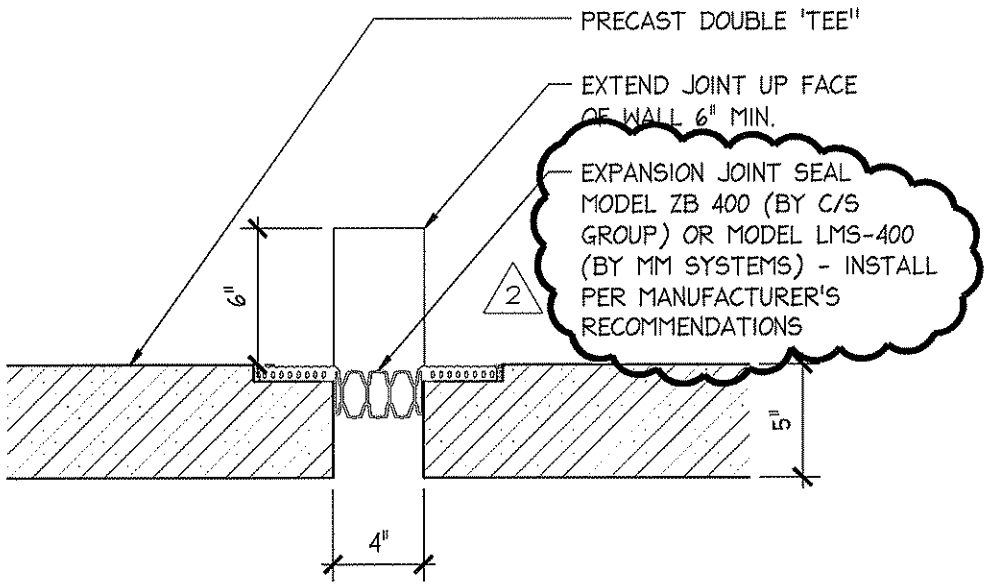

2 PRECAST 'TEE' FLOOR EXPANSION JOINT DETAIL

1 1/2" = 1'-0"

A9.02

STATE OF CONNECTICUT DEPARTMENT OF PUBLIC WORKS	DRAWING PREPARED BY: BL COMPANIES 355 RESEARCH PARKWAY MERIDEN, CONNECTICUT, 06450	date: 5/26/10 scale: AS NOTED
drawing title: DETAILS	project: 100% CONSTRUCTION DOCUMENTS PACKAGE SCSU PARKING GARAGE CF-RS-273	drawn by approved by
REVISIONS mark: 2 · date: 5/26/10 · description: ISSUED FOR ADDENDA #4	CAD no.: A07D1007902 · project no.: CF-RS-273	drawing no.: ASK-3

PART 1 - GENERAL

1.1 RELATED DOCUMENTS

A. Contract Documents and general provisions of the Contract, including General and Supplementary Conditions, other Division 01 Specification Sections, and Section 00 41 01 "Bid Proposal Form" apply to this Section.

1.2 SUMMARY

A. This Section includes the following:

1. Cash Allowances.
2. Unit Prices.

B. Related Sections: The following Sections contain requirements that relate to this Section:

1. Division 01 Section 01 23 13 "Supplemental Bids".
2. Division 01 Section 01 26 00 "Contract Modification Procedures".
3. Division 01Section 01 29 76 "Progress Payment Procedures".
4. Division 01 Section 01 77 00 "Closeout Procedures".

1.3 ALLOWANCES

A. This Section includes administrative and procedural requirements for Allowances.

B. Related Sections: The following Sections contain requirements that relate to this Section:

1. Division 01 Section 01 26 00 "Contract Modification Procedures" for procedures for submitting and handling Change Orders.

C. Cash Allowances:

1. The Contractor's costs for unloading and handling, labor, installation costs, storage, insurance, overhead and profit and other expense related to the Allowance item shall be included in the Lump Sum Bid Amount and not in the Allowance unless stated otherwise in the Allowance Schedule of this section.

2. Architect/Engineer:

a. Consult with Contractor for consideration of Products, suppliers and installers.

b. Select Products in consultation with the Project Manager and Agency Representatives and transmit decision to Construction Administrator.

c. Prepare Change Order.

3. Construction Administrator Responsibilities:

a. Consult with Architect/Engineer, Contractor, Project Manager and Agency Representatives for consideration of Products, suppliers and installers.

b. Select Products in consultation with Architect/Engineer, Project Manager and Agency Representatives and transmit decision to Contractor

c. Prepare Change Order.

4. Contractor Responsibilities:

a. Assist Architect/Engineer and Construction Administrator in selection of Products and Suppliers.

b. Obtain proposals from Suppliers and offer recommendations.

c. On notification of selection by Construction Administrator execute purchase agreement with designated supplier.

d. Arrange for and process shop drawings, product data, and samples. Arrange for delivery.

e. If the actual cost of an Allowance item is more or less than the given amount, the Contract Sum will be adjusted by Change Order.

5. Allowance Schedule:

a. Section 108316- "Banners": Include the Stipulated sum of $ 5,000 for banner shown on A5.01 and A5.03.

b. Section 330500 - "Common Work Results for Utilites": Include the Stipulated sum of $ 70,000 for direct cost of utility relocations. Provide original invoices from Utility Company.

c. Include the Stipulated sum of $ 43,750 for extension of the existing WEB based AUTOMATEDLOGIC Direct Digital VMS system.

d. Section 312100 - "Traffic and Construction": Include the Unit Price of $ 20,000 for traffic Control.

1.4 UNIT PRICES - GENERAL

A. This Section includes administrative and procedural requirements for unit prices.

B. Related Sections: The following Sections contain requirements that relate to this Section:

1. Division 01 Section 01 26 00 "Contract Modification Procedures" for procedures for submitting and handling Change Orders.
2. Division 01 Section 01 29 76 "Progress Payment Procedures" for procedures for submitting Application for Payments.

C. Definitions:

1. Unit Price: Amount the General Contractor acknowledges in the Bid Proposal Form as a price per unit of measurement for materials or services as described in the Bidding Documents or in the Contract Documents. General Contractor shall determine quantities if applicable.

D. Procedures:

1. Unit Prices included in the Contract Documents are to be used for determining compensation to the Contractor or Owner for changes to the scope of the work indicated in the Contract Documents, and included in the Lump Sum Contract Price. Special Unit Prices are for items complete, in place, and shall be inclusive of furnishing and installing of all material, labor, trucking, overhead, profit, equipment, hoisting, engineering, scaffolding, power hookups, protection, shop drawings, taxes, permits, appliances, delivery, insurance, supervision, cost of bond, etc. and shall remain in effect until completion of the Contract.
2. Unit Price: Is identified by the Owner as a price per unit of measurement for materials or services added to or deducted from the Contract Sum by appropriate modification, if the estimated quantities of Work required by the Contract Documents are increased or decreased.

a. Should the amount of the Work required be increased or decreased because of changes in the work ordered in writing by the Project Manager, the Contractor agrees that the following supplemental UNIT PRICES will be decreased 10% for a reduction of work. Each Unit Price shall include all equipment, tools, labor, permits, fees, etc., incidental to the completion of the work involved. All items marked with an asterisk (*) in the unit price schedules shall include the completion of the excavation, formation and compaction of sub-grade and the disposal of surplus or unsuitable materials in accordance with the Plans and Specifications or as directed by the Construction Administrator.

3. The Owner reserves the right to reject the Contractor's measurement of work-in-place that involves use of established unit prices, and to have this work measured, at the Owner's expense, by an independent surveyor acceptable to the Contractor.
4. Defect Assessment: Replace the Work, or portions of the Work, not conforming to the specified requirements. If, in the opinion of the Architect/Engineer, it is not practical to remove and replace the work the Architect/Engineer will direct an appropriate remedy or adjust the payment.
5. Unit Price Schedule: A "Unit Price Schedule" is included at the end of this Section. Specification Sections referenced in the Schedule contain requirements for materials described under each unit price.

1.4 UNIT PRICE SCHEDULES

A. Unit Price Schedule - Earth and Rock Excavation: This Section includes administrative and procedural requirements for the following unit prices and provisions are to be included in and become part of this Contract to be used in evaluating additions to or deductions from the work called for in the specifications and/or plans.

1. Unless otherwise specified elsewhere in these documents, Contractors are to assume that all excavation is earth; however, if unspecified rock is encountered, it will be paid for at the given unit prices listed in Paragraph "C". Rock prices are net in that allowances for reduced quantities of earth are also included in the unit prices. The prices given include all costs for overhead, profit and rock surveys.
2. Wherever rock to be excavated is encountered, the Contractor shall strip or expose the rock to such an extent that in the Owner's opinion the necessary measurements can be taken. The Contractor shall provide the Owner with a survey by a licensed land surveyor indicating top of rock elevations at points of intersection on a rectilinear grid with lines spaced sufficiently close to show accurately the rock surface contours. At the Owner's option, an additional survey may be furnished by the Owner from a licensed surveyor.
3. If the conditions of the excavation work indicated are clearly of a special nature, the Contractor may ask the Owner for reconsideration of the established unit prices and if granted, the unit prices will not apply, and prices will be negotiated in accordance with Article 13 of the General Conditions.

B. Definitions:

1. "EARTH" - is defined as excavation shall include removal of all materials other than 'water' and 'rock'.
2. "ROCK" - is defined as a boulder of one cubic yard or more in volume (1/2 cubic yard for a boulder in trenches), and rock in definite ledge formation and masonry structures of one cubic yard or more in volume, the removal of which requires the use of mechanical equipment or the use of explosives. Rock removed by scarification or ripping method is considered as a separate classification under Paragraph 4.c.(1).

3. "ORIGINAL GRADE" - is defined as being the grade which exists at the time of Contract Award.
4. "ROUGH GRADE" - is defined as being the completed surface of required excavations greater than 13' in width.
5. "MASS" - excavation is to be considered as an open area whose minimum horizontal dimensions exceed 13'.
6. "TRENCH" - is defined as excavation is defined as the removal of material from areas 13 feet or less in its minimal horizontal dimensions and below the elevation of rough grade or original grade, whichever is lower.

C. Procedures:

1. Rock Excavation in Trenches: Basis for Horizontal Measurement:
   a. Horizontal Measurements: Will be taken between the vertical planes as defined below.
   b. The Minimum Width of Trenches in Rock: Will be taken as 3' 0".
   c. Excavation For Walls Or Piers With Footings: The measurements will be taken parallel to and one foot outside of the edges of the concrete footings as called for in the plans (i.e. for 4' 0" footing, rock will be taken as 6' 0" in width).
   d. Excavation For Walls Or Piers Without Footings: The limits of the excavation will be 1' 6" outside of the line of concrete at bottom as shown or called for in the plans (i.e. for a wall with a bottom thickness of 1' 0", the width of the trench will be considered to be 4' 0"). (Caissons are excluded from these measurements).
   e. Excavation for Pipe Lines: Will be measured at 2' 0" more than the nominal inside diameter of the pipe but in no case less than 3' 0" wide.
   f. Excavation For Tanks, Vaults, Manholes, Pits, Etc.: Will be measured as 2' 0" greater in both length and width or diameter than the actual exterior dimensions of the structures and this excavation is considered to be trench only if any measured horizontal dimensions is 13' or less.
   g. No allowance will be made for rock removed beyond the above limits.
2. Rock Excavation in Trenches - Basis for Vertical Measurement:
   a. To determine depth of trench, vertical measurements will be taken from original grade or rough grade, (whichever is applicable), to the bottom of required excavation. These measurements will define the maximum depths for payments.
   b. To determine quantity of rock in trench, vertical measurements will be taken from the top of rock as encountered in the trench to 12" below the bottom of required rock excavation. Any over excavation below the required elevation shall be filled with concrete or other material as specified at no cost to the Owner.
   c. No allowance will be made for rock removed beyond the above limits.
3. Earth Excavation in Trenches - Basis of Measurement: (Horizontal & Vertical): The basis of measurements and allowance limit for earth excavation in trenches is identical to that indicated for rock excavation in trenches, except that there will be no allowance for 12" below the required elevation. In addition the following will prevail:

a. Maximum allowable widths for earth excavation in trenches without shoring:

Trench Depth - Classification	Add To Nominal ID Of Pipe Or To Footing Width
0 ft. - 6 ft.	3 ft.
Over 6 ft. - 10 ft.	5 ft.
Over 10 ft. - 15 ft.	7 ft.
Below 15 ft. deep the width of the trench shall be based on the individual case. The final depth of trench will determine the actual width for payment.	

b. If shoring is required the measurement shall be taken between the exterior walls of the shoring not to exceed 4' plus the I.D. of the pipe (for all depths).

c. To determine quantity of earth in trench, vertical measurements will be taken from the original or rough grade to actual bottom of earth excavation required.

4. Unit Prices - Earth and Rock Excavation (Basis for Payment): Prices include backfill with excavated material if it is suitable. Prices also include all excavation and disposal of all surplus or unsuitable material. Where replacement with the excavated material is prohibited or a particular backfill material is specified, the cost of the delivered replacement material in a volume equal to the above excavation pay limits minus the volume of the items installed in the trench shall be paid for a prior negotiated price. Prices do not include costs of shoring and de-watering but do include sloping for sides of excavation. Payment and credit amounts shall be determined in the following manner: Widths and depths of trench excavation as indicated. The total quantity of earth or rock excavation encountered in each depth payment category shall be paid for at its respective unit price as shown below. For example, in a 15' trench the first 6' will be paid for at the 0' - 6' price; the next 4' will be paid for at the over 6' - 10' price and the next 5' will be paid for at the over 10' - 15' price. Thus three different price brackets will prevail.

a.	EARTH EXCAVATION - HAND			UNIT	$ ADD	$ DEDUCT
	(1)	In Trenches - 0'. - 6'.		C.Y.	36.00	28.80
	(2)	In Trenches Below 6' Deep,		Prices Must Be Negotiated Before Work Is Started.		
b.	EARTH EXCAVATION - MACHINE			UNIT	$ ADD	$ DEDUCT
	(1)	Open Area	All Depths	C.Y.	18.81	15.05
	(2)	In trenches	0' - 4' deep	C.Y.	14.27	11.40
		Over	0' - 10' deep	C.Y.	19.71	15.75
		Over	0' - 15' deep	C.Y.	35.00	28.00
		Over	0 - 20' deep	C.Y.	75.00	60.00
c.	ROCK EXCAVATION			UNIT	$ ADD	$ DEDUCT
	(1)	Open Areas, Rock Removed By Ripping (Any Amount),				
		Net Rock		C.Y.	103.50	82.80
	(2)	Open Areas, With Explosives -				
		Net Rock -	Total Quantity Up To 100	C.Y.	126.00	100.80
			Total Quantity Up To 1,000	C.Y.	60.00	48.00
			Total Quantity Up To 1,000 or more	C.Y.	28.00	22.40

	(3)	In Trenches, Boulders, Remove By Machine		C.Y.	45.00	36.00
	(4)	In Trenches, Ripping Of Rock By Machine		C.Y.	105.00	84.00
	(5)	In trenches, with explosives				
		Net Rock	0' - 4' Deep	C.Y.	95.60	76.50
	(6)	In trenches, with explosives				
		Net Rock	0' - 10' Deep	C.Y.	125.00	100.00

c.	ROCK EXCAVATION (cont.)			UNIT	$ ADD	$ DEDUCT
	(7)	In trenches, with explosives				
		Net Rock	0 - 15' Deep	C.Y.	150.00	120.00
	(8)	In trenches, with explosives				
		Net Rock	Over 15' - 10' Deep	C.Y.	200.00	160.00
	(9)	In trenches, with explosives -				
		Net Rock	0 - 20' Deep,	Prices Must Be Negotiated Before Start Of Work.		
	(10)	Jack Holes (For Hydraulic Lift/Elevators)		L.F.	95.00	76.00
	(11)	Open Or Mass Areas - If Explosives Are Prohibited				
		Net Rock		C.Y.	125.00	100.00
	(12)	Trench Excavation - If Explosives Are Prohibited				
		Net Rock/With Rock Splitters And Jack Hammer or Hoe Ram		C.Y.	150.00	120.00

D. Unit Price Schedule - Miscellaneous:

1. SITEWORK – CONTROLLED OR HAZARDOUS MATERIALS:

There are no controlled or hazardous materials identified on the site. In the event that they are identified and need to be moved, or removed from the site, the General Contractor shall progress pursuant to the State of Connecticut Department of Transportation Standard Specifications for Roads, Bridges, and Incidental Construction Form 816 (most recent edition), Section 1.10.07. Payment shall be made according to this section as well.

The paragraph shall be taken in its entirety except as follows:

"If controlled or hazardous materials, other than those required for contract operations are discovered at the Project Site, the Department may engage a specialty contractor to handle and dispose of the materials."

The General Contractor shall be responsible to engage a specialty contractor if required to complete the work.

There shall be three delineations for the types of material considered in this unit price:

1. Controlled Disposal – Concentrations below the RSRs
2. Connecticut Regulated Wastes – Not Hazardous Material, but above the RSRs
3. Hazardous – As defined by RCRA

The unit costs shall be per ton and shall be determined by the tipping fee associated with the material disposal. These unit prices shall govern for up to 500 cubic yards of material. If there are more than 500 cubic yards combined then the prices shall be renegotiated between DPW and the contractor.

a.	Earthwork Item		UNIT	$ ADD	$ DEDUCT
	a.	Controlled Disposall	Ton	$86	$0
	b.	Connecticut Regulated Wastes	Ton	$125	$0
	c.	Hazardous	Ton	$350	$0

Unit prices shall be negotiated if there is a change in scope of work.

PART 2 - PRODUCTS (Not Applicable)

PART 3 - EXECUTION (Not Applicable)

END OF SECTION 01 20 00

PART 1 - GENERAL

1.1 RELATED DOCUMENTS

A. Drawings and general provisions of the Contract, including General and Supplementary Conditions and other Division 01 Specification Sections, apply to this Section.

1.2 SUMMARY

A. This Section includes administrative and procedural requirements for handling requests for equals and substitutions made after award of the Contract.

B. Related Sections: The following Sections contain requirements that relate to this Section:

1. Division 01 Section 01 33 00 "Submittal Procedures" specifies requirements for submitting the Contractor's Construction Schedule and the Submittal Schedule.
2. Division 01 Section 01 42 20 "Reference Standards and Definitions" specifies the applicability of industry standards to products specified.
3. Division 01 Section 01 60 00 "Product Requirements" specifies requirements governing the Contractor's selection of products and product options.

1.3 DEFINITIONS

A. Definitions in this Article do not change or modify the meaning of other terms used in the Contract Documents.

B. Equals or Substitutions General: Changes in products, materials, equipment, and methods of construction required by the Contract Documents proposed by the Contractor after award of the Contract.

1.4 SUBMITTALS

A. Equals and Substitution Request Submittals: The Owner will consider requests for equals or substitutions if made prior to the Receipt of the Competitive Bid. The information on all materials shall be consistent with the information herein. After the contract award, substitutions will be considered for materials or systems specified that are no longer available. It will not be considered if the product was not purchased in a reasonable time after award. The Contractor shall submit all equal and substitutions requests on the "Substitution Request" Form at the end of this Section. See Article 15 in the General Conditions for further refinement and information.

1. The Contractor is required to prepare and submit three (3) copies of the required data for the first manufacturer listed or procedure listed in the specifications section with reference to all of the following areas: the substance and function considering quality, workmanship, economy of operation, durability and suitability for purposes intended including the size, rating and cost. All submissions must include all the required data for the first listed manufacturer or procedure as specified, as well as the required data for the proposed Equal or Substitution. This will enable the Owner and Architect to determine that the proposed Equal or Substitution is or is not substantially equal to the first listed manufacturer or procedure.
2. Identify the product or the fabrication or installation method to be replaced in each request. Include related Specification Section and Drawing numbers.
3. Provide complete documentation showing compliance with the requirements for equals or substitutions, and the following information, as appropriate:

a. Coordination information, including a list of changes or modifications needed to other parts of the Work and to construction performed by the Owner and separate contractors that will be necessary to accommodate the proposed Equal or Substitution.

b. A detailed comparison chart of significant qualities of the proposed substitution with those of the Work specified. Significant qualities may include elements, such as performance, weight, size, durability, and visual effect.

c. Product Data, including Shop Drawings and descriptions of products and fabrication and installation procedures.

d. Samples, where applicable or requested.

e. A statement indicating the effect on the Contractor's Construction Schedule or CPM Schedule compared to the schedule without approval of the Equal or Substitution. Indicate the effect on overall Contract Time.

f. Cost information, broken down, including a proposal of the net change, if any in the Contract Sum.

g. The Contractor's certification that the proposed Equal or Substitution conforms to requirements in the Contract Documents in every respect and is appropriate for the applications indicated.

h. The Contractor's waiver of rights to additional payment or time that may subsequently become necessary because of the failure of the Equal or Substitution to perform adequately.

4. Architect's Action: If necessary, the Architect will request additional information or documentation for evaluation within seven (7) days of receipt of the original request for equal or substitution request. The Architect will notify the Construction Administrator who will notify the Owner of recommended acceptance or rejection of the proposed equal or substitution, within fourteen (14) days of receipt of the request, or seven (7) days of receipt of additional information or documentation, whichever is later. The Construction Administrator will give final acceptance or rejection by the Owner not less than seven (7) days after notification.

a. Any request deemed an "Equal" and accepted by the Construction Administrator, Architect, Owner, and Agency will result in written notification to the Contractor and will not be in the form of a change order for an "Equal".

b. Any request deemed a "Substitution" and rejected or approved by Construction Administrator, Architect, and Owner may result in written notification to the Contractor and may be in the form of a change order if the "Substitution" is approved.

PART 2 - PRODUCTS

2.1 EQUAL OR SUBSTITUTIONS

A. Conditions: The Architect will consider the Contractor's request for Equal or Substitution of a product or method of construction when one or more of the following conditions are satisfied, as determined by the Architect. If the following conditions are not satisfied, the Architect will return the requests to the Construction Administrator without action except to record noncompliance with these requirements.

1. The proposed request does not require extensive revisions to the Contract Documents.
2. The proposed request is in accordance with the general intent of the Contract Documents.
3. The proposed request is timely, fully documented, and/or properly submitted.

a. Coordination information, including a list of changes or modifications needed to other parts of the Work and to construction performed by the Owner and separate contractors that will be necessary to accommodate the proposed Equal or Substitution.

b. A detailed comparison chart of significant qualities of the proposed substitution with those of the Work specified. Significant qualities may include elements, such as performance, weight, size, durability, and visual effect.

c. Product Data, including Shop Drawings and descriptions of products and fabrication and installation procedures.

d. Samples, where applicable or requested.

e. A statement indicating the effect on the Contractor's Construction Schedule or CPM Schedule compared to the schedule without approval of the Equal or Substitution. Indicate the effect on overall Contract Time.

f. Cost information, broken down, including a proposal of the net change, if any in the Contract Sum.

g. The Contractor's certification that the proposed Equal or Substitution conforms to requirements in the Contract Documents in every respect and is appropriate for the applications indicated.

h. The Contractor's waiver of rights to additional payment or time that may subsequently become necessary because of the failure of the Equal or Substitution to perform adequately.

4. Architect's Action: If necessary, the Architect will request additional information or documentation for evaluation within seven (7) days of receipt of the original request for equal or substitution request. The Architect will notify the Construction Administrator who will notify the Owner of recommended acceptance or rejection of the proposed equal or substitution, within fourteen (14) days of receipt of the request, or seven (7) days of receipt of additional information or documentation, whichever is later. The Construction Administrator will give final acceptance or rejection by the Owner not less than seven (7) days after notification.

a. Any request deemed an "Equal" and accepted by the Construction Administrator, Architect, Owner, and Agency will result in written notification to the Contractor and will not be in the form of a change order for an "Equal".

b. Any request deemed a "Substitution" and rejected or approved by Construction Administrator, Architect, and Owner may result in written notification to the Contractor and may be in the form of a change order if the "Substitution" is approved.

PART 2 - PRODUCTS

2.1 EQUAL OR SUBSTITUTIONS

A. Conditions: The Architect will consider the Contractor's request for Equal or Substitution of a product or method of construction when one or more of the following conditions are satisfied, as determined by the Architect. If the following conditions are not satisfied, the Architect will return the requests to the Construction Administrator without action except to record noncompliance with these requirements.

1. The proposed request does not require extensive revisions to the Contract Documents.
2. The proposed request is in accordance with the general intent of the Contract Documents.
3. The proposed request is timely, fully documented, and/or properly submitted.

State of Connecticut

Equal or Substitute Product Request

☐ Pre-Bid ☐ Post-Bid. 16.3.2.1 ☐ Post Bid. 16.3.2.2 ☐ Post-Bid. 16.3.2.3

SEE PROCEDURE AND INSTRUCTIONS

Department of Public Works

Request No.: Dated:

To: State of Connecticut
Department of Public Works

Department of Public Works Project Number:

Project Name and Location:

References: Specifications - Section: Paragraph(s):
Drawings - Drawing No.: Detail(s):

Contractually Specified Product:

Contractor Proposed Product:

Proposed product is an ☐ Equal ☐ Substitute Product Model Number:

Proposed product is ☐ New ☐ 2-5 Years Old ☐ 5-10 Years Old ☐ More than 10 Years

See attached data for both Specified and Proposed Products as required by Specifications for this Project

Data attached: ☐ Drawings ☐ Product Data ☐ Reports ☐ Samples ☐ Tests ☐ Other:

Reason(s) for not providing the Specified Product:

Similar Installation:

Project: Owner:

Location: Consultant:

Date Installed:

Will proposed Substitute Product impact other parts of the Work? ☐ No ☐ Yes - see attached Explanation

Will proposed Substitute Product increase the Contract Time? ☐ No ☐ Yes - by Days

The Undersigned Certifies that the proposed Request for an Equal or Substitute Product conforms to the Specifications for this project,

Request submitted by the General Contractor:
name

By:
name title signature date

CONTRACTOR - Send copies to: Supervising Project Manager - Project Manager - Construction Administrator

Consultant's Review - This Substitution Request is:

☐ **Approved** ☐ **Approved as Noted** ☐ **Rejected - Use Specified Material(s).**

Review Issued by:
name signature date

Consultant - Send completed copies to: PM C A Other:

Approved as noted by Consultant

Project Manager: signature date

Copy: Project File File #2

PART 1 - GENERAL

1.1 RELATED DOCUMENTS

A. Drawings and general provisions of the Contract, including General and Supplementary Conditions and other Division 01 Specification Sections, apply to this Section.

1.2 SUMMARY

A. This Section specifies administrative and procedural requirements for handling and processing contract modifications.

B. Related Sections: The following Sections contain requirements that relate to this Section:

1. Division 01 Section 01 20 00 "Price & Payment Procedures" for administrative requirements governing use of Unit Prices.
2. Division 01 Section 01 25 00 "Substitution Procedures" for administrative procedures for handling requests for substitutions made after award of the Contract.
3. Division 01 Section 01 29 76 "Progress Payment Procedures" for administrative procedures governing Applications for Payment.
4. Division 01 Section 01 32 16.13 "CPM Schedules" for requirements for CPM scheduling and reporting progress of work.
5. Division 01 Section 01 33 00 "Submittal Procedures" for requirements for submittal of the Construction Progress Schedule or CPM Schedule.
6. General Requirements "Article 13" "Change Orders".

1.3 REQUESTS FOR INFORMATION

A. In the event that the Contractor or subcontractor, at any tier, determines that some portion of the drawings, specifications, or other contract documents requires clarification or interpretation by the Architect, the Contractor shall submit a "Request for Information" in writing to the Architect via the Construction Administrator. "Requests for Information" may only be submitted by the Contractor and shall only be submitted on the "Request for Information" forms as required by the Owner.

1. In the "Request for Information", the Contractor shall clearly and concisely set forth the issue for which clarification or interpretation is sought and why a response is needed from the Architect.
2. In the "Request for Information", the Contractor shall set forth an interpretation or understanding of the requirement along with reasons why such an understanding was reached.
3. The Owner acknowledges that this is a complex project. Based upon the owner's past experience with projects of similar complexity, the Owner anticipates that there will probably be some "Requests for Information" on this project.
4. The Architect will review all "Requests for Information" to determine whether they are valid "Requests for Information". If it is determined that the document is not a valid "Request for Information", it will be returned to the Contractor, unreviewed as to content, for resubmittal on the proper form and in the proper manner.
5. A "Requests for Information Response" shall be issued within seven (7) days of receipt of the request from the Contractor unless the Owner determines that a longer time is necessary to provide an adequate response. If a longer time is determined necessary by the Owner, the Owner

will, within seven (7) days of receipt of the request, notify the Contractor of the anticipated response time. If the Contractor submits a "Request for Information" on an activity with seven (7) days or less of float on the current project schedule, the Contractor shall not be entitled to any time extension due to the time it takes the Architect to respond to the request provided that the Architect responds within the seven (7) days set forth above.

6. A "Request for Information Response" from Architect will not change any requirement of the Contract Documents. In the event the Contractor believes that the "Request for Information Response" will cause a change to the requirements of the Contract Documents, the Contractor shall within five (5) Days give written notice to the Construction Administrator stating that the Contractor believes the "Request for Information Response" will result in a "Change Order" and the Contractor intends to submit a "Change Order Proposal" request. Failure to give such written notice five (5) Days shall waive the Contractor's right to seek additional time or cost under the requirement these Requirements.

1.4 MINOR CHANGES IN THE WORK

A. The Architect, through the Construction Administrator, will issue supplemental instructions authorizing minor changes in the Work, not involving adjustment to the Contract Sum or Contract Time, on the "Supplemental Instructions" form as required by the Owner.

1.5 PROPOSAL REQUEST

A. Architect/Owner-Initiated Requests For Proposals: The Architect or Owner will issue a detailed description of proposed changes in the Work via the Construction Administrator that will require adjustment to the Contract Sum or Contract Time. If necessary, the description will include supplemental or revised Drawings and Specifications. Such requests shall be on a "Proposal Request" form as required by the Owner.

1. A "Proposal Request" is issued for information only. Do not consider them as an instruction either to stop work in progress or to execute the proposed change.
2. Within (14) days of receipt of a "Proposal Request", submit a "Change Order Proposal" with the required information necessary to execute the change to the Construction Administrator for the Architect's/Owner's review.
   a. Include a list of quantities of products required and unit costs, with the total amount of purchases to be made. Where requested, furnish survey data to substantiate quantities.
   b. Indicate applicable delivery charges, equipment rental, and amounts of trade discounts.
   c. Include a statement indicating the effect the proposed change in the Work will have on the Contract Time.
   d. The Agency is tax exempt. All Contractor and Subcontractor services provided under your Contract with the State of Connecticut may not be exempt from taxes. The Department of Revenue Services can guide you as to which services are exempt and which are not. Please contact the State of Connecticut, Department of Revenue Services at 1-800-382-9463 or 860-541-3280.
   e. Dollar values shown on the Schedule of Values shall not be the governing (or deciding) final amounts for change orders involving either additional charges or deletions.

1.6 CHANGE ORDER PROPOSAL

A. When either a "Request for Information" from the Contractor or a "Proposal Request" from the Architect or Owner results in conditions that may require modifications to the Contract, the Contractor may propose changes by submitting a request for a "Change Order Proposal" to the Architect via the Construction Administrator on forms as required by the Owner. These forms shall also include "Change Order Proposal Worksheets" as required by the Owner.

1. Include statements outlining the reasons for the change and the effect of the change on the Work. Provide a complete description of the proposed change. Indicate the effect of the proposed change on the Contract Sum and Contract Time.
2. Include a list of quantities of products required and unit costs, with the total amount of purchases to be made. Where requested, furnish survey data to substantiate quantities as directed by Article 13 of the General Conditions of the Contract for Construction.
3. Indicate applicable delivery charges, equipment rental, and amounts of trade discounts.
4. Comply with requirements in Division 01 Section 01 25 00 "Substitution Procedures" if the proposed change requires an equal or substitution of one product or system for a product or system specified.
5. The State of Connecticut construction contract has the following tax exemptions:
   a. Purchasing of materials, which will be physically incorporated and become a permanent part of the project.
   b. Tools, supplies and equipment used in fulfilling the construction contract are not exempt.
   c. Services that are resold by the contractor are exempt, i.e. if a General Contractor hires a plumber, carpenter or electrician, a resale certificate may be issued to the subcontractor because these services are considered to be integral and inseparable component parts of the building contract

C. "Change Order Request" Forms: Use "Change Order Proposal" and "Change Order Proposal Worksheets" forms as required by Owner.

D. A "Change Order Proposal" cannot be submitted without either prior submission of a "Request for Information" from the Contractor or as a response to a "Proposal Request" submitted by the Architect or Owner.

E. Any "Change Order Request" submitted without a prior submittal of a "Request for Information" or as a response to a "Proposal Request" will be immediately rejected and returned to the Contractor.

1.7 CONSTRUCTION CHANGE DIRECTIVE

A. "Construction Change Directive": (As defined in General Conditions Article 1.22.)

When the Owner and the Contractor disagree on the terms of a "Change Order Proposal" resulting from either a "Request for Information" or "Proposal Request", then the Architect through the Construction Administrator may issue a "Construction Change Directive" on a "Construction Change Directive" form as authorized by the Owner. The "Construction Change Directive" instructs the Contractor to proceed with a change in the Work, for subsequent inclusion in a "Change Order".

1. The "Construction Change Directive" contains a complete description of the change in the Work. It also designates the method to be followed to determine change in the Contract Sum or Contract Time.

2. Contractor must proceed with the Work once a "Construction Change Directive" is issued.
3. The change in the Contract Sum and Contract Time resulting from the issuance of a "Construction Change Directive" will be based on "Time & Material" or "Unit Prices".
4. Issuance of "Construction Change Directive" does not guarantee payment for the Work described in the "Construction Change Directive".

B. Documentation: The Contractor shall maintain detailed records on a time and material basis of work required by the "Construction Change Directive".
1. After completion of the change, submit an itemized account and supporting data necessary to substantiate cost and time adjustments to the Contract.
2. The final value shall be negotiated based on the supporting data to determine the value of the work.

1.8 CHANGE ORDER PROCEDURES

A. Upon the Owner's approval of a Contractor's "Change Order Proposal", the Construction Administrator will issue a "Change Order" for signatures of the Architect, Owner and the Contractor on a "Change Order" form as required by the Owner.

PART 2 - PRODUCTS (Not Applicable)

PART 3 - EXECUTION (Not Applicable)

END OF SECTION 01 26 00

SECTION 265600
EXTERIOR LIGHTING

PART 1 - GENERAL

1.1 RELATED DOCUMENTS

A. Drawings and general provisions of the Contract, including General and Supplementary Conditions and Division 1 Specification Sections, apply to this Section.

1.2 SUMMARY

A. This Section includes the following:

1. Exterior luminaires with lamps and ballasts/drivers.
2. Luminaire-mounted photoelectric relays.
3. Poles and accessories.
4. Luminaire lowering devices.

B. Related Sections include the following:

1. Division 265100 Section "Interior Lighting" for exterior luminaires normally mounted on exterior surfaces of buildings.

1.3 DEFINITIONS

A. CRI: Color-rendering index.

B. HID: High-intensity discharge.

C. Luminaire: Complete lighting fixture, including ballast housing if provided.

D. Pole: Luminaire support structure, including tower used for large area illumination.

E. Standard: Same definition as "Pole" above.

F. LED: Light Emitting Diode.

1.4 STRUCTURAL ANALYSIS CRITERIA FOR POLE SELECTION

A. Dead Load: Weight of luminaire and its horizontal and vertical supports, lowering devices, and supporting structure, applied as stated in AASHTO LTS-4.

B. Live Load: Single load of 500 lbf, distributed as stated in AASHTO LTS-4.

C. Ice Load: Load of 3 lbf/sq. ft., applied as stated in AASHTO LTS-4.

D. Wind Load: Pressure of wind on pole and luminaire, calculated and applied as stated in AASHTO LTS-4.
   1. Wind speed for calculating wind load for poles 50 feet or less in height is 110 mph.

1.5 SUBMITTALS

A. Product Data: For each luminaire, pole, and support component, arranged in order of lighting unit designation. Include data on features, accessories, finishes, and the following:

   1. Physical description of luminaire, including materials, dimensions, effective projected area, and verification of indicated parameters.
   2. Details of attaching luminaires and accessories.
   3. Details of installation and construction.
   4. Luminaire materials.
   5. Photometric data based on laboratory tests of each luminaire type, complete with indicated lamps, ballasts, and accessories.

      a. For indicated luminaires, photometric data shall be certified by a qualified independent testing agency. Photometric data for remaining luminaires shall be certified by manufacturer.
      b. Photometric data shall be certified by manufacturer's laboratory with a current accreditation under the National Voluntary Laboratory Accreditation Program for Energy Efficient Lighting Products.
      c. Photometric data for LED luminaries must comply with IESNA LM-79 and IESNA LM-80 reporting.

   6. Photoelectric relays.
   7. Ballasts, including energy-efficiency data.
   8. Lamps, including life, output, and energy-efficiency data.
   9. Materials, dimensions, and finishes of poles.
   10. Means of attaching luminaires to supports, and indication that attachment is suitable for components involved.
   11. Anchor bolts for poles.
   12. Manufactured pole foundations.

B. Shop Drawings:

   1. Anchor-bolt templates keyed to specific poles and certified by manufacturer.
   2. Design calculations, certified by a qualified professional engineer, indicating strength of screw foundations and soil conditions on which they are based.
   3. Wiring Diagrams: Power and control wiring.

C. Samples for Verification: For products designated for sample submission in Exterior Lighting Device Schedule. Each sample shall include lamps and ballasts. Samples for manufacturers not listed on schedule being submitted as equal must be submitted in working order for approval 10 days prior to Bid.

D. Pole and Support Component Certificates: Signed by manufacturers of poles, certifying that products are designed for indicated load requirements in AASHTO LTS-4 and that load imposed by luminaire has been included in design.

E. Qualification Data: For agencies providing photometric data for lighting fixtures.

F. Field quality-control test reports.

G. Operation and Maintenance Data: For luminaires and poles to include in emergency, operation, and maintenance manuals.

H. Warranty: Special warranty specified in this Section.

1.6 QUALITY ASSURANCE

A. Luminaire Photometric Data Testing Laboratory Qualifications: Provided by manufacturers' laboratories that are accredited under the National Volunteer Laboratory Accreditation Program for Energy Efficient Lighting Products.

B. Luminaire Photometric Data Testing Laboratory Qualifications: Provided by an independent agency, with the experience and capability to conduct the testing indicated, that is an NRTL as defined by OSHA in 29 CFR 1910.7.

C. Electrical Components, Devices, and Accessories: Listed and labeled as defined in NFPA 70, Article 100, by a testing agency acceptable to authorities having jurisdiction, and marked for intended use.

D. Comply with IEEE C2, "National Electrical Safety Code."

E. Comply with NFPA 70.

1.7 DELIVERY, STORAGE, AND HANDLING

A. Package aluminum poles for shipping according to ASTM B 660.

B. Store poles on decay-resistant-treated skids at least 12 inches above grade and vegetation. Support poles to prevent distortion and arrange to provide free air circulation.

C. Handle wood poles so they will not be damaged. Do not use pointed tools that can indent pole surface more than 1/4 inch deep. Do not apply tools to section of pole to be installed below ground line.

D. Retain factory-applied pole wrappings on fiberglass and laminated wood poles until right before pole installation. Handle poles with web fabric straps.

E. Retain factory-applied pole wrappings on metal poles until right before pole installation. For poles with nonmetallic finishes, handle with web fabric straps.

1.8 WARRANTY

A. Special Warranty: Manufacturer's standard form in which manufacturer agrees to repair or replace products that fail in materials or workmanship; that corrode; or that fade, stain, perforate, erode, or chalk due to effects of weather or solar radiation within specified warranty period. Manufacturer may exclude lightning damage, hail damage, vandalism, abuse, or unauthorized repairs or alterations from special warranty coverage.

1. Warranty Period for Luminaires: Five years from date of Substantial Completion.
2. Warranty Period for Metal Corrosion: Five years from date of Substantial Completion.
3. Warranty Period for Color Retention: Five years from date of Substantial Completion.
4. Warranty Period for Lamps: Replace lamps and fuses that fail within 12 months from date of Substantial Completion; furnish replacement lamps and fuses that fail within the second 12 months from date of Substantial Completion.
5. Warranty Period for Poles: Repair or replace lighting poles and standards that fail in finish, materials, and workmanship within manufacturer's standard warranty period, but not less than three years from date of Substantial Completion.

1.9 EXTRA MATERIALS

A. Furnish extra materials described below that match products installed and that are packaged with protective covering for storage and identified with labels describing contents.

1. Lamps: 10 for every 100 of each type and rating installed. Furnish at least one of each type.
2. Glass and Plastic Lenses, Covers, and Other Optical Parts: 10 for every 100 of each type and rating installed. Furnish at least one of each type.
3. Ballasts: 10 for every 100 of each type and rating installed. Furnish at least one of each type.
4. Globes and Guards: 10 for every 20 of each type and rating installed. Furnish at least one of each type.

PART 2 - PRODUCTS

2.1 MANUFACTURERS

A. In other Part 2 articles where titles below introduce lists, the following requirements apply to product selection:

B. In Exterior Lighting Device Schedule where titles below are column or row headings that introduce lists, the following requirements apply to product selection:

1. Available Manufacturers: Subject to compliance with requirements, manufacturers offering products that may be incorporated into the Work include, but are not limited to, manufacturers specified.
2. Manufacturers: Subject to compliance with requirements, provide products by one of the manufacturers specified.

3. Basis of Design Product: The design of each item of exterior luminaire and its support is based on the product named. Subject to compliance with requirements, provide either the named product or a comparable product by one of the other manufacturers specified. I no other manufacturersare specified, see Section 1.5/C.

2.2 LUMINAIRES, GENERAL REQUIREMENTS

A. Luminaires shall comply with UL 1598 and be listed and labeled for installation in wet locations by an NRTL acceptable to authorities having jurisdiction.

B. Comply with IESNA RP-8 for parameters of lateral light distribution patterns indicated for luminaires.

C. Metal Parts: Free of burrs and sharp corners and edges.

D. Sheet Metal Components: Corrosion-resistant aluminum, unless otherwise indicated. Form and support to prevent warping and sagging.

E. Housings: Rigidly formed, weather- and light-tight enclosures that will not warp, sag, or deform in use. Provide filter/breather for enclosed luminaires.

F. Doors, Frames, and Other Internal Access: Smooth operating, free of light leakage under operating conditions, and designed to permit relamping without use of tools. Designed to prevent doors, frames, lenses, diffusers, and other components from falling accidentally during relamping and when secured in operating position. Doors shall be removable for cleaning or replacing lenses. Designed to disconnect ballast when door opens.

G. Exposed Hardware Material: Stainless steel.

H. Plastic Parts: High resistance to yellowing and other changes due to aging, exposure to heat, and UV radiation.

I. Light Shields: Metal baffles, factory installed and field adjustable, arranged to block light distribution to indicated portion of normally illuminated area or field.

J. Reflecting surfaces shall have minimum reflectance as follows, unless otherwise indicated:

1. White Surfaces: 85 percent.
2. Specular Surfaces: 83 percent.
3. Diffusing Specular Surfaces: 75 percent.

K. Lenses and Refractors Gaskets: Use heat- and aging-resistant resilient gaskets to seal and cushion lenses and refractors in luminaire doors.

L. Luminaire Finish: Manufacturer's standard paint applied to factory-assembled and -tested luminaire before shipping. Where indicated, match finish process and color of pole or support materials.

M. Factory-Applied Finish for Steel Luminaires: Comply with NAAMM's "Metal Finishes Manual for Architectural and Metal Products" for recommendations for applying and designating finishes.

1. Surface Preparation: Clean surfaces to comply with SSPC-SP 1, "Solvent Cleaning," to remove dirt, oil, grease, and other contaminants that could impair paint bond. Grind welds and polish surfaces to a smooth, even finish. Remove mill scale and rust, if present, from uncoated steel, complying with SSPC-SP 5/NACE No. 1, "White Metal Blast Cleaning," or SSPC-SP 8, "Pickling."
2. Exterior Surfaces: Manufacturer's standard finish consisting of one or more coats of primer and two finish coats of high-gloss, high-build polyurethane enamel.
   a. Color: As selected by Architect from manufacturer's full range.

2.3 LUMINAIRE-MOUNTED PHOTOELECTRIC RELAYS

A. Comply with UL 773 or UL 773A.

B. Contact Relays: Factory mounted, single throw, designed to fail in the on position, and factory set to turn light unit on at 1.5 to 3 fc and off at 4.5 to 10 fc with 15-second minimum time delay. Relay shall have directional lens in front of photocell to prevent artificial light sources from causing false turnoff.

1. Relay with locking-type receptacle shall comply with NEMA C136.10.
2. Adjustable window slide for adjusting on-off set points.

2.4 FLUORESCENT BALLASTS AND LAMPS

A. Low-Temperature Ballast Capability: Rated by its manufacturer for reliable starting and operation of indicated lamp(s) at temperatures minus 20 deg F and higher.

B. Ballast Characteristics:

1. Power Factor: 90 percent, minimum.
2. Sound Rating: A.
3. Total Harmonic Distortion Rating: Less than 10 percent.
4. Electromagnetic Ballasts: Comply with ANSI C82.1, energy-saving, high power factor, Class P, automatic-reset thermal protection.
5. Case Temperature for Compact Lamp Ballasts: 65 deg C, maximum.
6. Transient-Voltage Protection: Comply with IEEE C62.41 Category A or better.

C. Low-Temperature Lamp Capability: Rated for reliable starting and operation with ballast provided at temperatures minus 20 deg F and higher.

D. Fluorescent Lamps: Low-mercury type. Comply with the EPA's toxicity characteristic leaching procedure test; shall yield less than 0.2 mg of mercury per liter when tested according to NEMA LL 1.

2.5 LED

A. LED

1. CRI: Minimum 75
2. CCT: 6000K
3. Avg. Rated Life: 105,000 minimum hours.

B. LED Driver

1. Driver PF: > 90%
2. Class: 1
3. THD: < 20% of full load

2.6 BALLASTS FOR HID LAMPS

A. Comply with ANSI C82.4 and UL 1029 and capable of open-circuit operation without reduction of average lamp life. Include the following features, unless otherwise indicated:

1. Ballast Circuit: Constant-wattage autotransformer or regulating high-power-factor type.
2. Minimum Starting Temperature: Minus 22 deg F.
3. Normal Ambient Operating Temperature: 104 deg F.
4. Ballast Fuses: One in each ungrounded power supply conductor. Voltage and current ratings as recommended by ballast manufacturer.

B. Auxiliary, Instant-On, Quartz System: Factory-installed feature automatically switches quartz lamp on when fixture is initially energized and when momentary power outages occur. System automatically turns quartz lamp off when HID lamp reaches approximately 60 percent of light output.

C. High-Pressure Sodium Ballasts: Electromagnetic type with solid-state igniter/starter and capable of open-circuit operation without reduction of average lamp life. Igniter/starter shall have an average life in pulsing mode of 10,000 hours at an igniter/starter-case temperature of 90 deg C.

1. Instant-Restrike Device: Integral with ballast, or solid-state potted module, factory installed within fixture and compatible with lamps, ballasts, and mogul sockets up to 150 W.

   a. Restrike Range: 105- to 130-V ac.
   b. Maximum Voltage: 250-V peak or 150-V ac RMS.

2. Minimum Starting Temperature: Minus 40 deg F.

2.7 HID LAMPS

A. High-Pressure Sodium Lamps: ANSI C78.42, CRI 21 (minimum), color temperature 1900 K, and average rated life of 24,000 hours, minimum.

1. Dual-Arc Tube Lamp: Arranged so only one of two arc tubes is lighted at one time and, when power is restored after an outage, the cooler arc tube, with lower internal pressure, lights instantly, providing an immediate 8 to 15 percent of normal light output.

B. Metal-Halide Lamps: ANSI C78.1372, with a minimum CRI 65, and color temperature 4000 K.

C. Pulse-Start, Metal-Halide Lamps: Minimum CRI 65, and color temperature 4000 K.

D. Ceramic, Pulse-Start, Metal-Halide Lamps: Minimum CRI 80, and color temperature 4000 K.

2.8 POLES AND SUPPORT COMPONENTS, GENERAL REQUIREMENTS

A. Structural Characteristics: Comply with AASHTO LTS-4.

1. Wind-Load Strength of Poles: Adequate at indicated heights above grade without failure, permanent deflection, or whipping in steady winds of speed indicated in Part 1 "Structural Analysis Criteria for Pole Selection" Article, with a gust factor of 1.3.
2. Strength Analysis: For each pole, multiply the actual equivalent projected area of luminaires and brackets by a factor of 1.1 to obtain the equivalent projected area to be used in pole selection strength analysis.

B. Luminaire Attachment Provisions: Comply with luminaire manufacturers' mounting requirements. Use stainless-steel fasteners and mounting bolts, unless otherwise indicated.

C. Mountings, Fasteners, and Appurtenances: Corrosion-resistant items compatible with support components.

1. Materials: Shall not cause galvanic action at contact points.
2. Anchor Bolts, Leveling Nuts, Bolt Caps, and Washers: Hot-dip galvanized after fabrication, unless stainless-steel items are indicated.
3. Anchor-Bolt Template: Plywood or steel.

D. Concrete Pole Foundations: Cast in place, with anchor bolts to match pole-base flange. Concrete, reinforcement, and formwork are specified in Division 3 Section "Cast-in-Place Concrete."

E. Power-Installed Screw Foundations: Factory fabricated by pole manufacturer, with structural steel complying with ASTM A 36/A 36M and hot-dip galvanized according to ASTM A 123/A 123M; and with top-plate and mounting bolts to match pole base flange and strength required to support pole, luminaire, and accessories.

F. Breakaway Supports: Frangible breakaway supports, tested by an independent testing agency acceptable to authorities having jurisdiction, according to AASHTO LTS-4.

2.9 STEEL POLES

A. Poles: Comply with ASTM A 500, Grade B, carbon steel with a minimum yield of 46,000 psig; 1-piece construction up to 40 feet in height with access handhole in pole wall.

1. Shape: Square, straight.
2. Mounting Provisions: Butt flange for bolted mounting on foundation or breakaway support.

B. Steel Mast Arms: Single-arm type, continuously welded to pole attachment plate. Material and finish same as pole.

C. Brackets for Luminaires: Detachable, cantilever, without underbrace.

1. Adapter fitting welded to pole and bracket, then bolted together with stainless-steel bolts.
2. Cross Section: Tapered oval, with straight tubular end section to accommodate luminaire.
3. Match pole material and finish.

D. Pole-Top Tenons: Fabricated to support luminaire or luminaires and brackets indicated, and securely fastened to pole top.

E. Steps: Fixed steel, with nonslip treads, positioned for 15-inch vertical spacing, alternating on opposite sides of pole; first step at elevation 10 feet above finished grade.

F. Intermediate Handhole and Cable Support: Weathertight, 3-by-5-inch handhole located at midpoint of pole with cover for access to internal welded attachment lug for electric cable support grip.

G. Grounding and Bonding Lugs: Welded 1/2-inch threaded lug, complying with requirements in Division 16 Section "Grounding and Bonding," listed for attaching grounding and bonding conductors of type and size listed in that Section, and accessible through handhole.

H. Cable Support Grip: Wire-mesh type with rotating attachment eye, sized for diameter of cable and rated for a minimum load equal to weight of supported cable times a 5.0 safety factor.

I. Platform for Lamp and Ballast Servicing: Factory fabricated of steel with finish matching that of pole.

J. Prime-Coat Finish: Manufacturer's standard prime-coat finish ready for field painting.

K. Galvanized Finish: After fabrication, hot-dip galvanize complying with ASTM A 123/A 123M.

L. Factory-Painted Finish: Comply with NAAMM's "Metal Finishes Manual for Architectural and Metal Products" for recommendations for applying and designating finishes.

1. Surface Preparation: Clean surfaces to comply with SSPC-SP 1, "Solvent Cleaning," to remove dirt, oil, grease, and other contaminants that could impair paint bond. Grind welds and polish surfaces to a smooth, even finish. Remove mill scale and rust, if

present, from uncoated steel, complying with SSPC-SP 5/NACE No. 1, "White Metal Blast Cleaning," or SSPC-SP 8, "Pickling."

2. Interior Surfaces of Pole: One coat of bituminous paint, or otherwise treat for equal corrosion protection.
3. Exterior Surfaces: Manufacturer's standard finish consisting of one or more coats of primer and two finish coats of high-gloss, high-build polyurethane enamel.

    a. Color: As selected by Architect from manufacturer's full range.

2.10 POLE ACCESSORIES

A. Base Covers: Manufacturers' standard metal units, arranged to cover pole's mounting bolts and nuts. Finish same as pole.
    a.

PART 3 - EXECUTION

3.1 LUMINAIRE INSTALLATION

A. Install lamps in each luminaire.

B. Fasten luminaire to indicated structural supports.

1. Use fastening methods and materials selected to resist seismic forces defined for the application and approved by manufacturer.

C. Adjust luminaires that require field adjustment or aiming.

3.2 POLE INSTALLATION

A. Align pole foundations and poles for optimum directional alignment of luminaires and their mounting provisions on the pole.

B. Clearances: Maintain the following minimum horizontal distances of poles from surface and underground features, unless otherwise indicated on Drawings:

1. Fire Hydrants and Storm Drainage Piping: 60 inches.
2. Water, Gas, Electric, Communication, and Sewer Lines: 10 feet.
3. Trees: 15 feet.

C. Concrete Pole Foundations: Set anchor bolts according to anchor-bolt templates furnished by pole manufacturer. Concrete materials, installation, and finishing requirements are specified in Division 3 Section "Cast-in-Place Concrete."

D. Foundation-Mounted Poles: Mount pole with leveling nuts, and tighten top nuts to torque level recommended by pole manufacturer.

1. Use anchor bolts and nuts selected to resist seismic forces defined for the application and approved by manufacturer.
2. Grout void between pole base and foundation. Use nonshrink or expanding concrete grout firmly packed to fill space.
3. Install base covers, unless otherwise indicated.
4. Use a short piece of 1/2-inch- diameter pipe to make a drain hole through grout. Arrange to drain condensation from interior of pole.

E. Embedded Poles with Tamped Earth Backfill: Set poles to depth below finished grade indicated on Drawings, but not less than one-sixth of pole height.

1. Dig holes large enough to permit use of tampers in the full depth of hole.
2. Backfill in 6-inch layers and thoroughly tamp each layer so compaction of backfill is equal to or greater than that of undisturbed earth.

F. Embedded Poles with Concrete Backfill: Set poles in augered holes to depth below finished grade indicated on Drawings, but not less than one-sixth of pole height.

1. Make holes 6 inches in diameter larger than pole diameter.
2. Fill augered hole around pole with air-entrained concrete having a minimum compressive strength of 3000 psi at 28 days, and finish in a dome above finished grade.
3. Use a short piece of 1/2-inch- diameter pipe to make a drain hole through concrete dome. Arrange to drain condensation from interior of pole.
4. Cure concrete a minimum of 72 hours before performing work on pole.

G. Poles and Pole Foundations Set in Concrete Paved Areas: Install poles with minimum of 6-inch- wide, unpaved gap between the pole or pole foundation and the edge of adjacent concrete slab. Fill unpaved ring with pea gravel to a level 1 inch below top of concrete slab.

H. Raise and set poles using web fabric slings (not chain or cable).

3.3 BOLLARD LUMINAIRE INSTALLATION

A. Align units for optimum directional alignment of light distribution.

B. Install on concrete base with top 4 inches above finished grade or surface at bollard location. Cast conduit into base, and shape base to match shape of bollard base. Finish by troweling and rubbing smooth. Concrete materials, installation, and finishing are specified in Division 3 Section "Cast-in-Place Concrete."

3.4 INSTALLATION OF INDIVIDUAL GROUND-MOUNTING LUMINAIRES

A. Install on concrete base with top 4 inches above finished grade or surface at luminaire location. Cast conduit into base, and finish by troweling and rubbing smooth. Concrete materials, installation, and finishing are specified in Division 3 Section "Cast-in-Place Concrete."

3.5 CORROSION PREVENTION

A. Aluminum: Do not use in contact with earth or concrete. When in direct contact with a dissimilar metal, protect aluminum by insulating fittings or treatment.

B. Steel Conduits: Comply with Division 16 Section "Raceways and Boxes." In concrete foundations, wrap conduit with 0.010-inch- thick, pipe-wrapping plastic tape applied with a 50 percent overlap.

3.6 GROUNDING

A. Ground metal poles and support structures according to Division 16 Section "Grounding and Bonding."

1. Install grounding electrode for each pole, unless otherwise indicated.
2. Install grounding conductor pigtail in the base for connecting luminaire to grounding system.

B. Ground nonmetallic poles and support structures according to Division 16 Section "Grounding and Bonding."

1. Install grounding electrode for each pole.
2. Install grounding conductor and conductor protector.
3. Ground metallic components of pole accessories and foundations.

3.7 FIELD QUALITY CONTROL

A. Inspect each installed fixture for damage. Replace damaged fixtures and components.

B. Illumination Observations: Verify normal operation of lighting units after installing luminaires and energizing circuits with normal power source.

1. Verify operation of photoelectric controls.

C. Illumination Tests:

1. Measure light intensities at night. Use photometers with calibration referenced to NIST standards. Comply with the following IESNA testing guide(s):

a. IESNA LM-5, "Photometric Measurements of Area and Sports Lighting."
b. IESNA LM-50, "Photometric Measurements of Roadway Lighting Installations."
c. IESNA LM-52, "Photometric Measurements of Roadway Sign Installations."
d. IESNA LM-64, "Photometric Measurements of Parking Areas."
e. IESNA LM-72, "Directional Positioning of Photometric Data."
f. IESNA LM-79, “Absolute Photometry”.

D. Prepare a written report of tests, inspections, observations, and verifications indicating and interpreting results. If adjustments are made to lighting system, retest to demonstrate compliance with standards.

3.8 DEMONSTRATION

A. Engage a factory-authorized service representative to train Owner's maintenance personnel to adjust, operate, and maintain luminaire lowering devices. Refer to Division 1 Section "Demonstration and Training."

END OF SECTION 265600

State of Connecticut

Equal or Substitute Product Request

☒ Pre-Bid ☐ Post-Bid. 15.3.2.1 ☐ Post Bid. 15.3.2.2 ☐ Post-Bid. 15.3.2.3

SEE PROCEDURE AND INSTRUCTIONS

Department of Public Works

Request No.: Dated: 5/12/10

To: State of Connecticut
Department of Public Works

Department of Public Works Project Number: CF-RS-273

Project Name and Location: SCSU Parking Garage New Haven, CT

References: Specifications - Section: 074113 Paragraph(s): 2.7
Drawings - Drawing No.: A3.01 Detail(s):

Contractually Specified Product: S-5

Contractor Proposed Product: Sno-Barricade

Proposed product is an ☒ Equal ☐ Substitute Product Model Number: SNB-COL

Proposed product is ☐ New ☒ 2-5 Years Old ☐ 5-10 Years Old ☐ More than 10 Years

See attached data for both Specified and Proposed Products as required by Specifications for this Project

Data attached: ☐ Drawings ☒ Product Data ☐ Reports ☐ Samples ☐ Tests ☐ Other:

Reason(s) for not providing the Specified Product:

Similar Installation:

Project: Body Cote Owner: Centimark

Location: Rocky Hill, CT Consultant: Jeff

Date Installed: 11/09

Will proposed Substitute Product impact other parts of the Work? ☐ No ☒ Yes - see attached Explanation — Loss Labor

Will proposed Substitute Product increase the Contract Time? ☒ No ☐ Yes - by ☐ Days

The Undersigned Certifies that the proposed Request for an Equal or Substitute Product conforms to the Specifications for this project.

Request submitted by the ~~General Contractor~~ Supplier: Sno-Gem, Inc. (name)

By: Bill Reyes (name) / Account Executive (title) _____ (signature) 5/12/10 (date)

CONTRACTOR - Send copies to: Supervising Project Manager - Project Manager - Construction Administrator

Consultant's Review - This Substitution Request is:

☒ Approved ☐ Approved as Noted ☐ Rejected - Use Specified Material(s).

Review Issued by: BL COMPANIES SCOTT PELLMAN (name) _____ (signature) 5-24-10 (date)

Consultant - Send completed copies to: PM CA Other:

Approved as noted by Consultant

Project Manager: _____ (signature) _____ (date)

Copy: Project File [illegible]

SNO BARRICADE™

raising the bar in snow retention

INSTALLATION INSTRUCTIONS

1.) The Sno-Gem Sno-Barricade system is comprised of a 2 piece clamp and 1" square tube. Calculate the number of clamps needed for each 10' section of bar (i.e.- 5 clamps for a 24" wide panel) and place the bar through the clamps. The 10' bar can now be raised to the roof. Space the two end clamps at the dimension you want the bar to sit, typically 1' up from the eave, open each clamp and attach to the seam.

2.) Fasten 2 5/16" socket head cap screws into clamp to firmly set clamp in place. Repeat for each clamp that has previously been placed on the bar and attach to each seam.

3.) Insert and tighten the ¼" set screw into the top of the clamp. This set screw will hold the bar in place and prevent any lateral movement.

4.) We provide an insert for each section of tubing. The insert is placed into the ends of each tube so that the run is truly continuous. After a full run of tubing is installed, an End Cap will be provided for each end.

5.) The Sno-Gem Sno-Flag is an optional item that will help to prevent snow and/or ice from sliding under the bar. The Sno-Flag(s) should be centered on the panel and installed such that the Sno-Flag is placed in front (i.e.-upslope) of the bar. The set screw is to be inserted into the pre-punched hole in the Sno-Flag and will not be visible from the ground. This will prevent the Sno-Flag from moving laterally as well as prevent any rotation of the Sno-Flag.

PLEASE CONTACT SNO-GEM, INC. @ 888-766-4367 WITH ANY QUESTIONS

SNO FLAG
INSTALLATION DETAIL

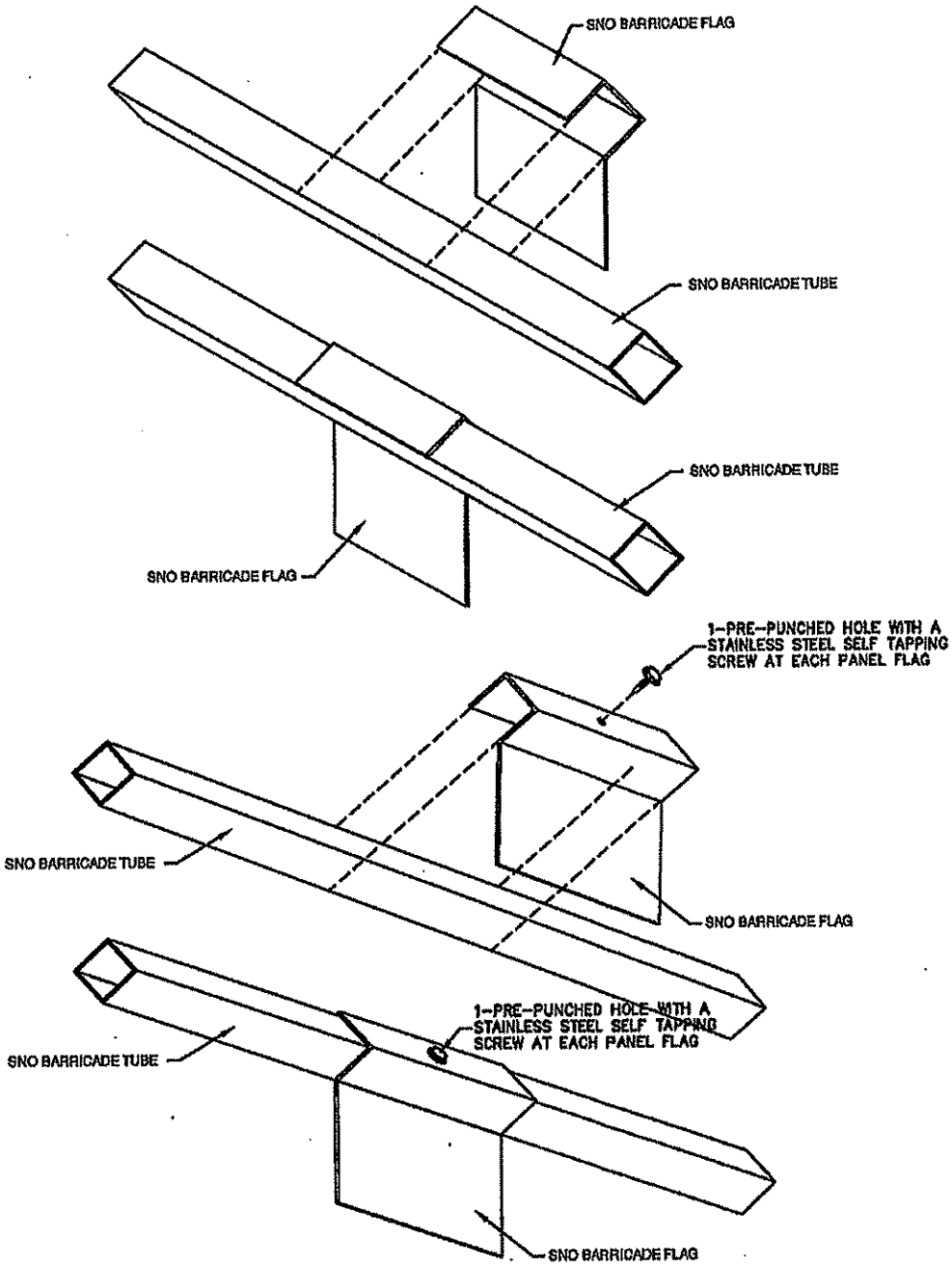

SNO-GEM SNOW GUARD LAYOUT

NOTE: FOR CLARITY THIS DRAWING IS NOT TO SCALE.

SNO GEM DOES NOT PERFORM AN INDEPENDENT SITE INSPECTION. ALL LAYOUT AND QUANTITY RECOMMENDATIONS ARE BASED SOLELY ON THE INFORMATION PROVIDED BY THE PURCHASER, INCLUDING, BUT NOT LIMITED TO, BUILDING DIMENSIONS, GEOGRAPHICAL LOCATION, ROOF PITCH, LENGTH OF RUN AND TYPE OF ROOF SYSTEM. ACTUAL BUILDING CONDITIONS MAY VARY AND COULD RESULT IN A CHANGE TO SNO GEM LAYOUT AND/OR QUANTITY RECOMMENDATIONS. SNO GEM MAKES NO WARRANTY OF ANY KIND, EXPRESS OR IMPLIED, INCLUDING BUT NOT LIMITED TO, ANY WARRANTY OF MERCHANTABILITY OR WARRANTY OF FITNESS FOR A PARTICULAR PURPOSE.

SNO GEM
the ultimate snow guard™

SNO-GEM, INC.
4800 METALMASTER WAY
McHenry, IL 60050

Phone: 815.477.GEMS
Fax: 815.455.GEMS
WEBSITE: WWW.SNOGEM.COM
E-MAIL: INFO@SNOGEM.COM

SNO-BARRICADE DETAIL

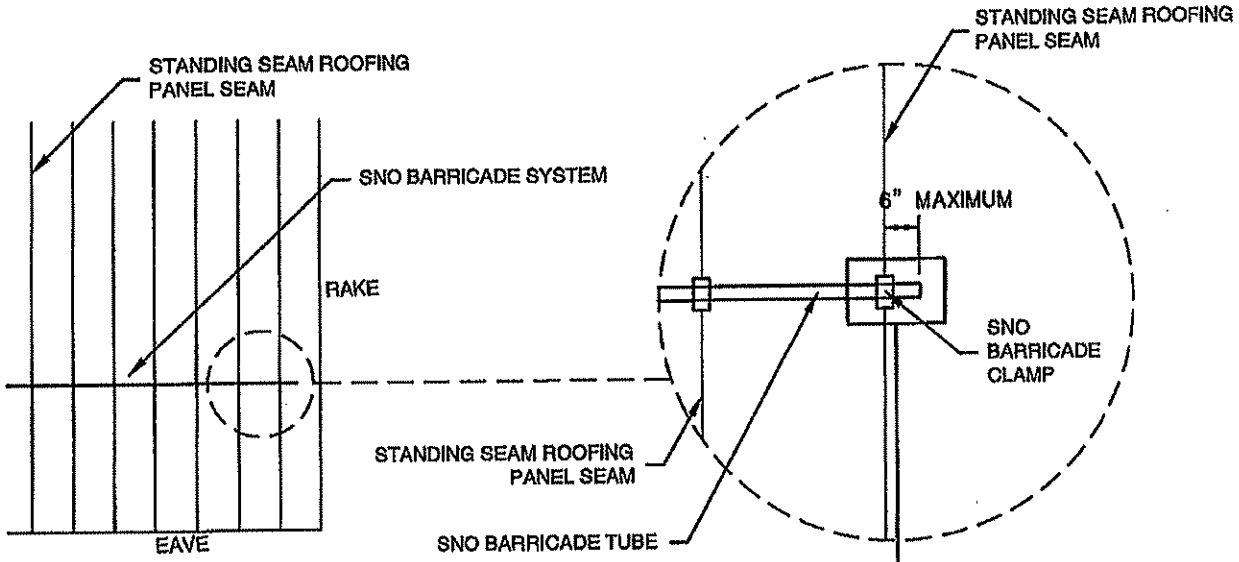

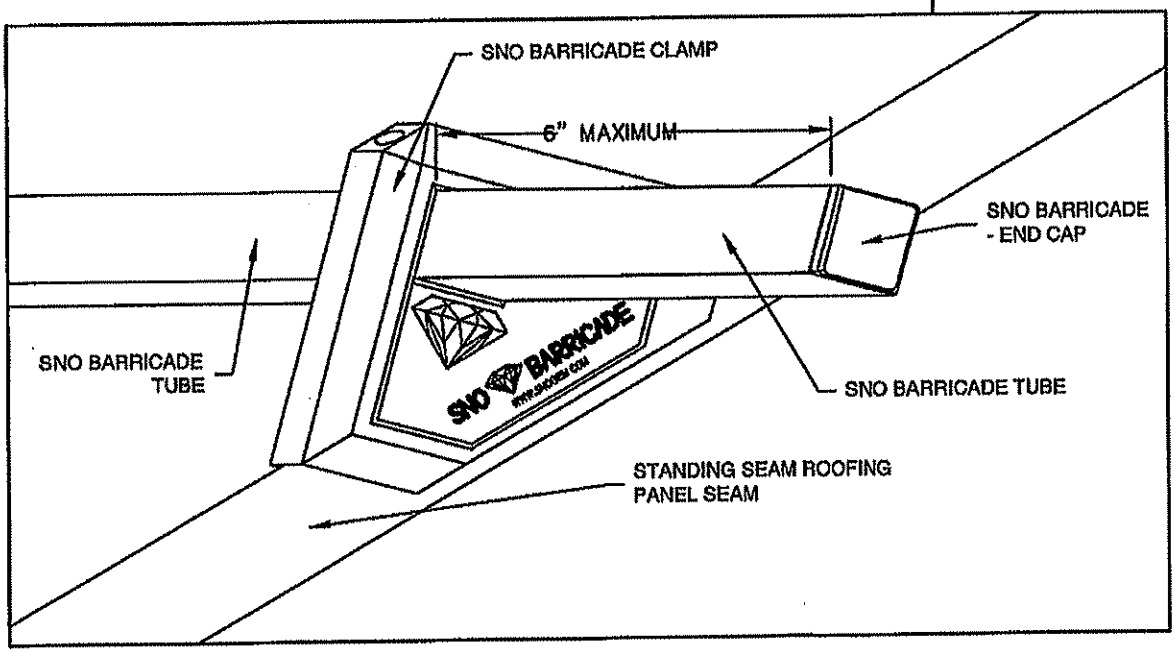

***NOTE: THE ENDS OF EACH SNO BARRICADE STRAIGHT RUN ARE TO BE CUT DOWN SO THAT THE TUBE EXTENDS A MAXIMUM OF 6" PAST THE LAST SEAM OF THE ROOFING PANEL, AS SHOWN ABOVE ONLY.**

SNO-GEM SNOW GUARD LAYOUT

NOTE: FOR CLARITY THIS DRAWING IS NOT TO SCALE.

SNO GEM DOES NOT PERFORM AN INDEPENDENT SITE INSPECTION. ALL LAYOUT AND QUANTITY RECOMMENDATIONS ARE BASED SOLELY ON THE INFORMATION PROVIDED BY THE PURCHASER, INCLUDING, BUT NOT LIMITED TO, BUILDING DIMENSIONS, GEOGRAPHICAL LOCATION, ROOF PITCH, LENGTH OF RUN AND TYPE OF ROOF SYSTEM. ACTUAL BUILDING CONDITIONS MAY VARY AND COULD RESULT IN A CHANGE TO SNO GEM LAYOUT AND/OR QUANTITY RECOMMENDATIONS. SNO GEM MAKES NO WARRANTY OF ANY KIND, EXPRESS OR IMPLIED, INCLUDING BUT NOT LIMITED TO, ANY WARRANTY OF MERCHANTABILITY OR WARRANTY OF FITNESS FOR A PARTICULAR PURPOSE.

SNO GEM
the ultimate snow guard™

SNO-GEM, INC.
4800 METALMASTER WAY
McHenry, IL 60050

Phone: 815.477.GEMS
Fax: 815.455.GEMS
WEBSITE: WWW.SNOGEM.COM
E-MAIL: INFO@SNOGEM.COM

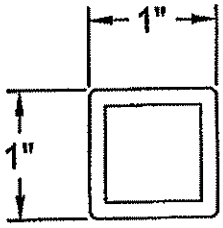

SIDE VIEW

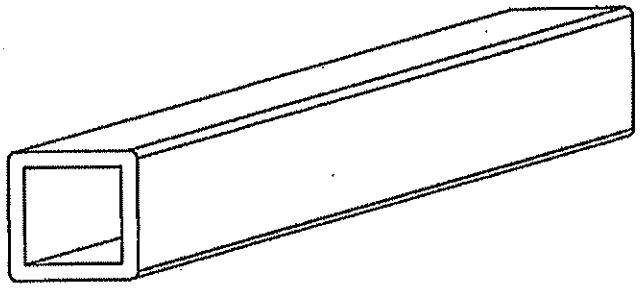

ISOMETRIC VIEW

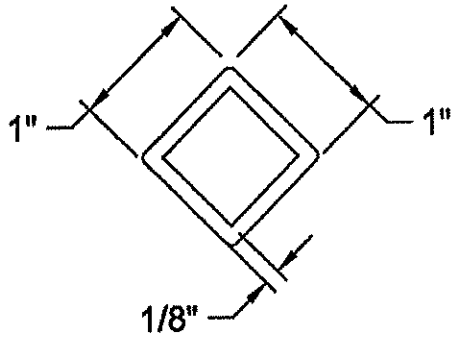

SIDE VIEW

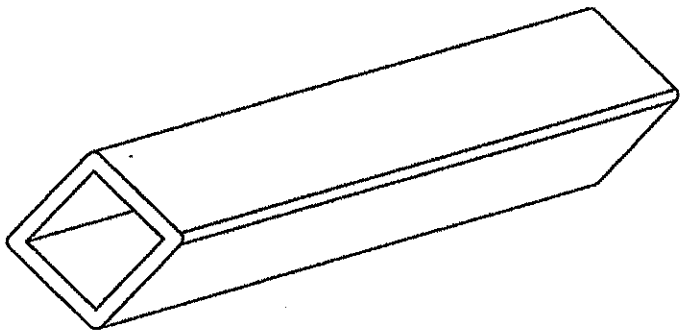

ISOMETRIC VIEW

SNO-GEM, 1" SQUARE ALUMINUM TUBE

SNO-GEM, INC.
4800 Metalmaster Way
McHenry, IL 60050

Phone: 815.477.GEMS
Fax: 815.455.GEMS
www.snogem.com

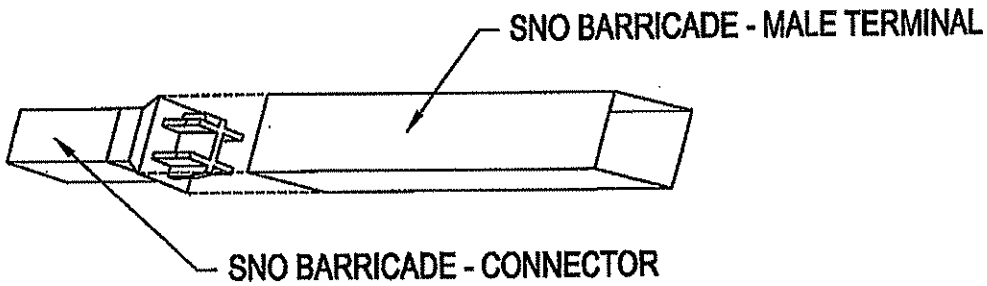

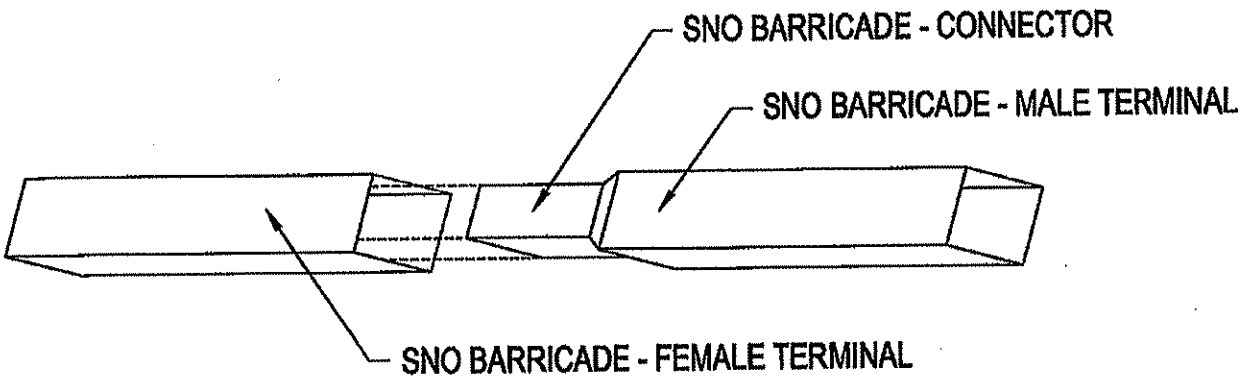

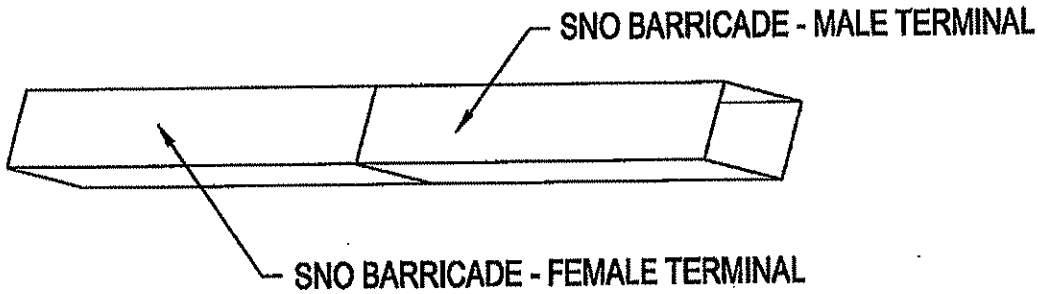

SNO-GEM, INC. 4800 METAL MASTER WAY MCHENRY, IL. 60050 (815) 477-4367	SNOW BARRICADE - CONNECTOR	SCALE: NTS
	MATERIAL:	
	COLOR:	
DATE: 02/27/09		PAGE 1
DRAWN BY: JTC		

SNO BARRICADE - CONNECTOR

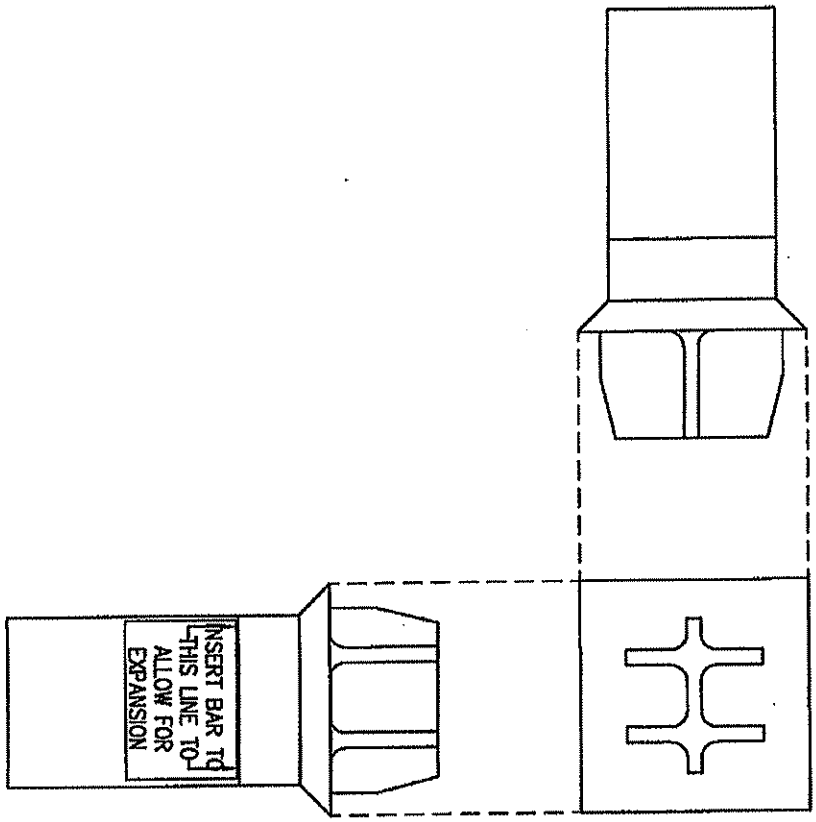

SNO-GEM, INC. 4800 METAL MASTER WAY MCHENRY, IL. 60050 (815) 477-4367	SNOW BARRICADE - CONNECTOR	SCALE: NTS
	MATERIAL:	
	COLOR:	
DATE: 02/27/09		PAGE 2
DRAWN BY: JTC		

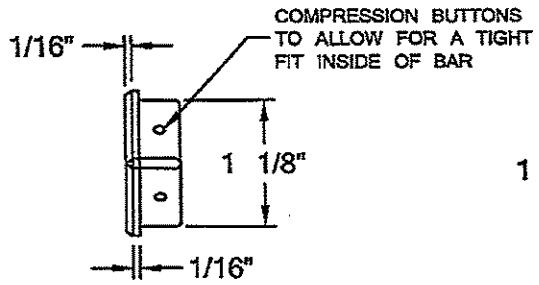

TOP VIEW

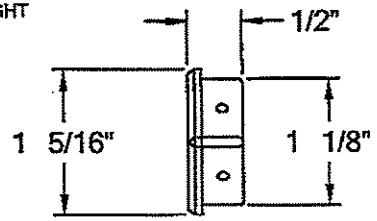

BOTTOM VIEW

ISOMETRIC VIEW

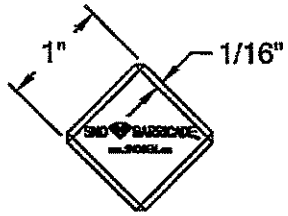

FRONT VIEWS

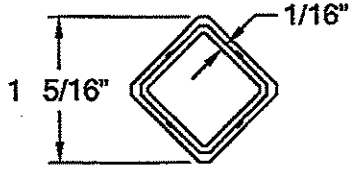

BACK VIEW

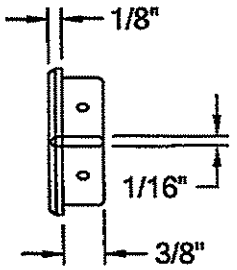

SIDE VIEW

SNO-GEM, INC. 4800 METALMASTER WAY MCHENRY, IL. 60050 (815) 477-4567	SNOW BARRICADE - ACCESSORIES	SCALE: 1" = 1"
	MATERIAL: ZAMAK #3 OR POLYCARBONATE	
	COLOR: MULTIPLE	
DATE: 02/22/06		PAGE 1
DRAWN BY: T.V.	BAR END CAP	

RCMS CONTROLS, INC.

29 North Plains Highway - #17 ? Wallingford, CT 06492
203.284.0100 ? FAX 203.284.8561

SCSU Parking Garage

DDC Temperature Controls

Scope of Work

Temperature Controls

By:
Lauren Marotta
Sales Engineer
RCMS Controls, Inc.
29 North Plains Highway - # 17
Wallingford, CT 06492
Cell: 203-410-7247
Office: 203-284-0100, X-1015
Fax: 203-284-8561
Email: lmarotta@rcmscontrols.com

Proposal Date: 5/19/2010
Number of Pages Including Cover: 4

The following Building Management System is based on an Open Protocol, BACnet integrated BMS network of DDC controllers manufactured by Automated Logic. This project will be an extension of the existing WEB Based AUTOMATEDLOGIC Direct Digital BMS System which is presently in place at the Courthouse.

THIS PROPOSAL INCLUDES:

1. DDC Control of Exhaust Fans (Qty 4) – Stair way Fans
2. DDC Control of Radiant Heaters (Qty 6)
3. DDC Control of Lighting Zones (Qty 4, E 501 Planss)
4. Condenser Unit Wiring for Split System
5. Control of Exhaust Fan 1 and 6 - Thermostat provided by manufacturer
6. Control of Unit Heater (Qty 1) – Thermostat provided by manufacturer
7. Integration to SCSU Campus Wide WEBCTRL System
8. All applicable controls wiring for DDC System as specified.
9. All Applicable Color Graphics.
10. As Built Drawings.
11. One Year Warranty.

PROPOSAL EXCLUSIONS:

1. CT State Sales Tax.
2. Furnishing, Wiring and Installation of Smoke Dampers, Fire Dampers, Fire/Smoke Dampers.
3. Smoke Detectors, Smoke Purge Panels, integration to and wiring for fire/smoke damper.
4. Furnishing Lighting Contactors and Relays (We provide wiring from relay to BMS system).
5. DDC Control of AC Split System
6. All roofing, demolition, painting, cutting, fire stopping, patching and temporary cooling
7. Testing or Abatement of materials suspected of containing hazardous particles such as asbestos.

BASE PRICE:

$43,750.00

Forty Three Thousand Seven Hundred Fifty Dollars and Zero Cents

We here at RCMS Controls continuously strive to meet and exceed the requirements and expectations of our clients and customers. We are confident that the above scope of services meets the job requirements. Please contact the undersigned if you have any questions or comments.

Sincerely,

Lauren Marotta
Sales Engineer
RCMS Controls, Inc.
29 North Plains Highway - # 17
Wallingford, CT 06492
Cell: 203-410-7247
Office: 203-284-0100, X-1015
Fax: 203-284-8561
Email: lmarotta@rcmscontrols.com

ACCEPTANCE OF PROPOSAL: The above prices, specifications, and conditions are satisfactory and are hereby accepted. You are authorized to begin work	**SIGNATURE:**
	TITLE:
	DATE:

O&G INDUSTRIES, INC.

David R. Longo

112 WALL STREET - TORRINGTON, CT 06790
PHONE (860) 489-9261 - FAX (860) 496-4227

TELECOPY MESSAGE

DATE: May 20, 2010

ATTENTION: BL Companies / Michael Milne, DPW / Mellanee Walton, DPW
FAX NUMBER: 203-639-8384 / 860-713-7261 / 860-713-7395

REGARDING: **SCSU LOT # 7 PARKING GARAGE / PROJECT NO.: CF-RS-273**
RFI's / Bid Questions.

Please see the attached RFI / Bid Questions regarding the above project.

Thank you for your time and consideration,

David R. Longo

Senior Estimator
O&G Industries, Inc.
860-489-9261
860-496-422y, fax
<davidlongo@ogind.com>

THERE ARE A TOTAL OF 3 PAGES, INCLUDING THIS COVER SHEET.

IF YOU DO NOT RECEIVE ALL PAGES CLEARLY, PLEASE CALL ME AT (860) 489-9261.

SCSU LOT # 7 PARKING GARAGE / PROJECT NO.: CF-RS-273 May 20, 2010

RFI's / Bid Questions O&G Industries, Inc.

1. The Floor Plans A1.01-A1.06 call for Vehicle Restraint Cables along the ramp walls. There is no specification section for this item. Please provide specifications.
2. The Floor Plans A1.01-A1.06 call for Galvanized Steel Framed Vinyl Coated Chain Link Fence throughout the ramps at the light walls. There is no specification for this item. Please provide specifications.
3. On Drawing A2.01 every detail has a text leader on it with missing text. Please clarify and/or provide the text associated with each detail.
4. Specification section 055000, Item 2.08B speaks about grating as it pertains to a melting system and a snow chute assembly. There does not appear to be any such items detailed on the drawings or any provisions in the specifications for either of these systems. Please clarify.
5. Drawing 1/A5.02 shows a fabric banner and is noted 'Fabric Banner – Final design, size & color to be provided by Owner'. Is this to be incuded in our bid and if so, can you please provide specific details for accurate pricing [or provide an allowance for all bidders]?
6. Will any days be added to the completion schedule if any of the Supplemental bids are accepted.
7. In our experience, UI budgets are typically provided as a Plus-or-Minus / Order of Magnitude estimate and their final invoice will reflects whatever they say it costs even if it goes over their original budget. That makes it difficult to carry accurate cost in a competitive bid scenario. Also, there is no guarantee they will even be able to provide an estimate in time for the bid date. In light of that, can an allowance value be provided for all bidders to carry for this UI work [or carried by the DPW outside this bid]?
8. Will the Single Source bidders from Simplex-Grinnell and RC. Marra/RCMS Controls provide a complete scope of work for the General Contractors for review prior to the bid date?
9. Will Simplex-Grinnell and R.C. Marra/RCMS state what percentage of the Set Aside & MBE/WBE requirements they will be able to cover in their scope?
10. At the temporary parking area, there is concrete debris and other misc. construction debris on the surface, partially buried and likely even more buried in the existing piles that cannot be seen or quantified. Will this debris be removed by the owner prior to the start of construction? If the GC's are made responsible, how will we quantify buried or partially buried debris [suggest an allowance if that is to be the case]?
11. Please provide a rough schedule of exams, commencement activities and any other significant events on the campus which may impact construction as well as the restrictions to construction activities that will be in effect [ie. Noise, deliveries, blocked streets, etc.].
12. At the prebid, the adjacent tennis courts were mentioned as a possible location for staging if needed. Please clarify if that will be allowed and if the courts and fencing will need to be restored to original or new condition, demolished and removed completely or if they can be just be left in "as is" condition after use.
13. In the Summary of Work section 01-1100, pg. 5, pp. C entitled "Subsurface Contaminated Soils Investigations", it states that if a contaminated soils report has been prepared for this project it will be included in a separate volume. Can we assume that since no report was provided that there is no contaminated soils anticipated on this project site?

SCSU LOT # 7 PARKING GARAGE / PROJECT NO.: CF-RS-273 May 20, 2010

RFI's / Bid Questions O&G Industries, Inc.

14. Can we get clarifications for the following items on the finish schedule/materials?
    a. The finish material legend shows PT #1 through PT#7, however as far as we can tell only #1 & #2 are used. Where are the other finishes used?
    b. Room finish schedule shows Room 303, Stair 3, Level 3 as the only stair landing walls to be painted. Is this correct?
    c. In the column details on Sheet A7.02, column covers are called out to "match curtain wall". Can you provide a specification or more detail for the fabrication of these column covers?
15. Site Drawing GU-1 does not clearly show the existing conduit line entering the existing MH outside the Energy Center. Could you clarify that it is in this MH?
16. Can you provide a plan showing the location / distance from the Existing MH outside the Energy Center to the New Proposed Metal Clad 15kv Switch/gear?
17. Footing Base Detail 10 / S2.05 indicates 3 ft. thick, ¾" minus process beneath footings. Will this be required even if the bottom of footings is on solid/virgin soil, below the "Fills or Organics" layer(s) referred to in the Welti Geotechnical report?
18. Currently, Suppl. bid no. 1 will not include the additional bay areas or the ramp roof and conversely, Suppl. bids no. 2 and No. 3 will not include LED lighting premiums. Therefore, if you accept all the Suppl. bids as they are described, you will not have the costs for LED lighting in the additional bays or under the ramp roof. Please clarify.

SCSU LOT #7 PARKING GARAGE
PROJECT NO. CF-RS-273
RFI'S / BID QUESTIONS RESPONSE:

DATE: 5/26/2010

ATTENTION: O&G Industries, Inc

DISTRIBUTION:

PREPARED BY: Todd Johnson T: Ext.:

EMAIL: Spellman@blcompanies.com

PROJECT NAME: SCSU PROJECT NUMBER: CR-RS-273

SUBJECT: RFI / Bid Questions O&G Industries, Inc.

1. Refer to Spec Section 055000 Metal Fabrications.
2. Fence is to be supplied and installed by Precast Contractor see and Specified in Section 323113.
3. The leaders with missing text are room names that printed incorrectly see Sheet A2.01 for clarification provided in Addendum #3.
4. There is no snowmelt system in the project. Section 055000 2.08B should be removed. From the project specifications.
5. Contractor to provide an allowance for Banner povided in Addendum #3.
6. No days will be added.
7. Allowance is provided in Addendum #3
8. Scope of work is provided in Addendum #3
9. R.C. Mana/RCMS is provided in Addendum #3. Simplex-Grinnel to follow next week.
10. Contractor to provide an allowance.
11. The Connecticut State Special Olympics that are held in the second of June each year on Thursday, Friday, Saturday and Sunday. Contractors would still be able to work but they would need to take extra precaution with deliveries etc.
12. The Tennis Courts are to be used but restored to the original or newer condition.
13. There are no anticipated contaminated soils expected on the project site.

14a. Paints #3 - #7 are used as described on sheets A12.01 through A12.08.

14b. Room 303 Level 3 should not be painted GWB to be changes to exposed. Walls in Stair 3 will not be painted.. See Revised Sheet A8.01 provided in Addendum #3

14c. Refer to Spec Section 076200. Sheet Metal Flashing and Trim

15. The plan is clear, information provided is what is available.
16. Drawings show EL close to the building running along Wintergreen turning into the site toward the energy center to an existing manhole. Also shown on EP2.02
17. Yes it is required.
18. All Supplemental Bids are accepted sequentially and the LED lighting is shown on the drawings for supplemental Bid 2 and 3. Drawings EL104 Should be removed from the set Since if Supplemental Bid 1 is accepted then there will be no Florescent lights under the roof structure.

ARCHITECTURE

ENGINEERING

PLANNING

LANDSCAPE ARCHITECTURE

LAND SURVEYING

ENVIRONMENTAL SCIENCES

355 Research Parkway
Meriden, Connecticut
06450

800.301.3077 T
203.630.1406 T
203.630.2615 F

blcompanies.com

GIORDANO
Construction Managers and General Contractors
1155 Main Street
Branford, CT 06405
Phone 203-488-7264 FAX 203-481-5764

FAX

Date: 5/21/2010
To: Michael Milne
Company: DPW
From: Brad Rotman bnr@giordanomail.com
RE: RFI SCSU PARKING GARAGE

Boring Log B-5 is missing pages.
Are these missing pages available?

See attached missing sheet 1 of 2 B-5.

Number of pages including cover sheet: 1

Receiver's FAX number: 860-713-7261

CLARENCE WELTI ASSOC., INC.
P.O. BOX 397
GLASTONBURY, CONN 06033

CLIENT
BL COMPANIES

PROJECT NAME
SCSU PARKING GARAGE
LOCATION
WINTERGREEN AVENUE, NEW HAVEN, CT

	AUGER	CASING	SAMPLER	CORE BAR.
TYPE	HSA		SS	
SIZE I.D.	3.75"		1.375"	
HAMMER WT.			140 lbs	
HAMMER FALL			30"	

OFFSET
LINE & STA.
N. COORDINATE
E. COORDINATE

SURFACE ELEV.
HOLE NO. B-5

GROUND WATER OBSERVATIONS
AT 25.5 FT. AFTER 0 HOURS
AT FT. AFTER HOURS

START DATE 5/21/08
FINISH DATE 5/21/08

DEPTH	SAMPLE NO.	BLOWS/6"	DEPTH	A	STRATUM DESCRIPTION + REMARKS	ELEV.
0					ASPHALT	0.2'
	1	7-17-15-13	1.00'-3.00'		GREY FINE-CRS.SAND, LITTLE SILT & GRAVEL - FILL	1.0
					BR. FINE-CRS.SAND, TRACE SILT & FINE GRAVEL	
	2	9-9-8-7	3.00'-5.00'		BR.FINE-MED.SAND, TRACE SILT	3.0
5	3	4-4-6-5	5.00'-7.00'			
10	4	4-5-6	10.00'-11.50'			
15	5	3-4-5	15.00'-16.50'			
20	6	4-3-3	20.00'-21.50'			
25	7	5-5-7	25.00'-26.50'		RED/BR.FINE-CRS.SAND, LITTLE SILT, TRACE GRAVEL	25.5
30	8	3-4-3	30.00'-31.50'			
35						

LEGEND: COL. A:RECOVERY "
SAMPLE TYPE: D=DRY A=AUGER C=CORE U=UNDISTURBED PISTON S=SPLIT SPOON
PROPORTIONS USED: TRACE=0-10% LITTLE=10-20% SOME=20-35% AND=35-50%

DRILLER: J. BREWER
INSPECTOR:

REQUEST FOR INFORMATION

From: Worth Construction Co., Inc.
24 Taylor Avenue
Bethel, CT 06801
(203) 797-8788
(203) 791-2515 FAX

WCCI RFI No. 006

To: **BL COMPANIES** Fax No.: **(203) 639-8384**

To: **DPW – STATE OF CONNECTICUT**
Attn: **Michael Milne** Fax No.: **(860) 713-7261**

Date: **May 20, 2010**

Project: **SCSU PARKING GARAGE LOT #7**
New Haven, Connecticut

Spec. Section: N/A **Drawing Reference:** N/A

INFORMATION REQUESTED:
Please advise if there is a provision for payment for stored material prior to installation.

Signed: Nicholas A. Torrano

Response Date: 5/26/10 Respondent: Todd Johnson

RESPONSE:

There is a provision for payment for stored material prior to installation

---

cc: RFI Log

Fax: May 20 2010 09:43am P001/001

REQUEST FOR INFORMATION

From: Worth Construction Co., Inc.
24 Taylor Avenue
Bethel, CT 06801
(203) 797-8788
(203) 791-2515 FAX

WCCI RFI No. 005

To: **BL COMPANIES** Fax No.: **(203) 639-8384**

To: **DPW – STATE OF CONNECTICUT**
Attn: **Michael Milne** Fax No.: **(860) 713-7261**

Date: **May 20, 2010**

Project: **SCSU PARKING GARAGE LOT #7**
New Haven, Connecticut

Spec. Section: 32 84 00 **Drawing Reference:** ALL

INFORMATION REQUESTED:
Please provide the design and layout for the irrigation system since none seems to be indicated in the bid documents. Please include the electrical requirements for the irrigation system as well.

Signed: Nicholas A. Torrano

Response Date: 5/26/10 Respondent: Todd Johnson

RESPONSE:

Irrigation system to be design as a performance package as indicated on LL-1 "Plaza Planting Plan"

---

cc: RFI Log

Fax: May 20 2010 09:42am P001/001

REQUEST FOR INFORMATION

From: Worth Construction Co., Inc.
24 Taylor Avenue
Bethel, CT 06801
(203) 797-8788
(203) 791-2515 FAX

WCCI RFI No. 004

To: **BL COMPANIES** Fax No.: **(203) 639-8384**

To: **DPW – STATE OF CONNECTICUT**
Attn: **Michael Milne** Fax No.: **(860) 713-7261**

Date: **May 20, 2010**

Project: **SCSU PARKING GARAGE LOT #7**
New Haven, Connecticut

Spec. Section: 10 14 00 **Drawing Reference:** Electrical Drawings

INFORMATION REQUESTED:
Please provide the electrical requirements (i.e. wire size, circuit and panel locations, etc.) for the illuminated signage since none seem to be indicated in the bid documents.

Signed: Nicholas A. Torrano

Response Date: 5/26/10 Respondent: Todd Johnson

RESPONSE:

Information shown on EP2.01 and E3.01. See attached revised drawings for addendum #3

---

cc: RFI Log

Fax: May 20 2010 09:42am P001/001

REQUEST FOR INFORMATION

From: Worth Construction Co., Inc.
24 Taylor Avenue
Bethel, CT 06801
(203) 797-8788
(203) 791-2515 FAX

WCCI RFI No. 003

To: **BL COMPANIES** Fax No.: **(203) 639-8384**

To: **DPW – STATE OF CONNECTICUT**
Attn: **Michael Milne** Fax No.: **(860) 713-7261**

Date: **May 20, 2010**

Project: **SCSU PARKING GARAGE LOT #7**
New Haven, Connecticut

Spec. Section: N/A **Drawing Reference:** N/A

INFORMATION REQUESTED:
Please advise if the requirement for masonry contractors named on the bid documents can be omitted since the masonry scope is so minor.

Signed: Nicholas A. Torrano

Response Date: 5/26/10 Respondent: Todd Johnson

RESPONSE:

Masonry contractor must meet requirements of the Project Specifications.

---

cc: RFI Log

May 20 2010 09:41am P001/001 Fax:

Vin Giordano III

From: Richard Green [rgreen@cherryhillglass.com]
Sent: Thursday, May 20, 2010 7:23 AM
To: vsgiii@giordanomail.com
Cc: 'Julie DeMatties'
Subject: SCSU Parking Garage Lot #7 {Request For Information]

Regarding spec section 084413 would Vistawall be a acceptable curtainwall supplier?
Thanks
Rick

Vistawall would be considered as an acceptable supplier as long as the meet all the requirements of the project manual.

REQUEST FOR INFORMATION

From: Worth Construction Co., Inc.
24 Taylor Avenue
Bethel, CT 06801
(203) 797-8788
(203) 791-2515 FAX

To: **DPW – STATE OF CONNECTICUT** **WCCI RFI No. 002**

Attn: **BL Companies** Fax No.: **203-639-8384**
Michael Milne / DPW **860-713-7261**

Date: **May 15, 2010**

Project: **SCSU PARKING GARAGE LOT #7**
New Haven, Connecticut

Spec. Section: 00 40 14 **Drawing Reference:** _____

INFORMATION REQUESTED:
The Affidavits, Notices and Certifications Samples are noted as Revision 08-09. The CT DPW site provides forms, which are located in the Ethics, Affidavits and Legal Forms Area, that have different Revision Dates. Please confirm which forms should be included in the Bid Submittal Documents.

Signed: Louis DiGaetano

Response Date: 5/26/10 Respondent: Todd Johnson

RESPONSE:

The forms to be used are the current ones on the CT DPW web site.

---

cc: RFI Log

REQUEST FOR INFORMATION

From: Worth Construction Co., Inc.
24 Taylor Avenue
Bethel, CT 06801
(203) 797-8788
(203) 791-2515 FAX

To: **DPW – STATE OF CONNECTICUT** **WCCI RFI No. 001**

Attn: **BL Companies** Fax No.: **203-639-8384**
Michael Milne / DPW **860-713-7261**

Date: **May 14, 2010**

Project: **SCSU PARKING GARAGE LOT #7**
New Haven, Connecticut

Spec. Section: 11 12 00 **Drawing Reference:** _____

INFORMATION REQUESTED:
Please provide the contact information for the (3) specified Parking Control Equipment Manufacturers listed in the contract specifications.

Signed: Nicholas A. Torrano

Response Date: 5/26/10 Respondent: Todd Johnson

RESPONSE:

The Contractor is to perform there own research on listed manufactures.

---

cc: RFI Log

PH. 203-483-4378 FAX 203-483-4340

Giordano Construction Co., Inc.

CONSTRUCTION MANAGERS, DEVELOPERS & GENERAL CONTRACTORS
Main Office: 1155 MAIN ST., P.O. BOX 802, BRANFORD, CT 06405
Office Network: 175 NORTH MAIN STREET, BRANFORD, CT 06405

FAX

DATE: May 17, 2010

TO: Arch/Eng Consultant / Project Manager

COMPANY: BL Companies / DPW

FROM: Karen A. Ford

RE: SCSU Parking Garage Lot #7
RFI - Finish for curtainwall, storefront and doors

1. Drawing A8.01 door type B calls for a permadize platinum ice finish
   Type type B and C should be revised to say Sterling Gray
2. Drawing A5.02 general note 6 and spec 084113 2.08 d calls for a clear anodized finish
   Finish should be based on Kawneers Permadized Finish color Sterling Gray
3. Spec 084413 2.07 c calls for a painted finish.
   Finish should be based on Kawneers Permadized Finish color Sterling Gray

Which is correct?

Karen A. Ford
Project Engineer
Giordano Construction Co., Inc.
Ph. (203) 483-9000 Ext. 378
Fax (203) 483-4340
www.giordano-construction.com
GIORDANO

May 17 2010 10:05 Giordano Construction Co. 203-483-4340 p.1

MPCC CORP.
81 Rockdale Avenue, New Rochelle, NY 10801
Tel #: 914.636.0000 Fax # : 914.636.0019

GENERAL CONTRACTORS

REQUEST FOR INFORMATION

Project: Southern Connecticut State Lot #7 Parking Garage

RFI NO: 1

DATE: 5/14/2010

ATTN: **Architect/Engineer**
BL Companies
Fax: 203-639-8384

CC: **Michael Milne**
DPW project Manager
Fax: 860-713-7261

SUBJECT: **Precast Structural Concrete**
Section 034100

MESSAGE: The precast structural concrete specifications name there fabricators (page 4). Are these the only fabricators that can be used for this project or can other qualified fabricators be used?

RESPONSE:

Other fabricators would be considered if they meet the qualifications listed in the Specifications

CC:

Contractor: MPCC CORP.
By: Ralph DeMasi, Chief Estimator (ext 21) **Date:** 5/14/2010

ELECTRICAL CONTRACTORS
Master License No. CT 103805
Master License No., MA A-11725

Electrical Energy Systems Corporation

Engineer:	BL Companies
Attn:	Scott Pellman
Date:	5/24/2010
Fax:	203-639-8384

REQUEST FOR INFORMATION (RFI) #5

EESC Project No:	Contract No.
Project Title:	Southern Connecticut State University Lot #7 Parking Garage
Contractor:	
Location:	New Haven,CT.
Drawing #/Spec Section:	GU1 & E6.01

Question/Problem: Dwg. GU1 Requires That one of the 5"Conduits to be Multiplex From the Existing Manholes to the Proposed Manholes Dwg. E6.01 Key Note "13 does not Require that 1-5" be Multiplex. The next problem is that 5" Multiplex Conduit Scheduled 80 is not Manufactured. Please Advise.

Review By: _____ Schedule Impact: _____ Y _____ N _____ Date: _____

Signature: John Taylor

ENGINEER

Reply:

A&E: _____ DATE: _____

Mutliplex conduit not required. Delete note on GU1. Work to be done per E6.01

GENERAL CONTRACTORS

MPCC CORP.
81 Rockdale Avenue, New Rochelle, NY 10801
Tel #: 914.636.0000 Fax # : 914.636.0019

REQUEST FOR INFORMATION

Project: Southern Connecticut State Lot #7 Parking Garage

RFI NO: #2 DATE: **24-May-10**

ATTN: **Architect/Engineer**
BL Companies
Fax: 203-639-8384

CC: **Michael Milne**
DPW Project Manager
Fax: 860-713-7261

SUBJECT: **Sanitary & Storm Piping**

MESSAGE: There is no insulation specification for the sanitary and storm water piping, is it not required for this project.

RESPONSE:

There is no insulated Sanitary and storm water piping.

CC:

Contractor: MPCC CORP.
By: **Ralph DeMasi,** Chief Estimator Date:

GENERAL CONTRACTORS

MPCC CORP.
81 Rockdale Avenue, New Rochelle, NY 10801
Tel #: 914.636.0000 Fax # : 914.636.0019

REQUEST FOR INFORMATION

Project: Southern Connecticut State Lot #7 Parking Garage

RFI NO: #3 DATE: **25-May-10**

ATTN: **Architect/Engineer**
BL Companies
Fax: 203-639-8384

CC: **Michael Milne**
DPW Project Manager
Fax: 860-713-7261

SUBJECT: **Fluorescent vs LED Lighting Alternate**

MESSAGE: Supplemental Bid No. 1 is to substitute LED lighting in place of fluorscent and high pressure Sodium lighting for the Base Bid. Base Bid includes fluorscent and high pressure Sodium lighting.

There Isn't a line item for LED lighting alternate for Supplemental Bid No. 2

Should there be a Supplemental Bid #4 for the LED lighting alternate for Supplemental Bid #2.

Kindly advise.

RESPONSE:

All supplemental bids are excepted sequentially If Supp. Bid No. 2 is accepted then 1 is already in the project. Drawing currently show Led lighting within the bay for Supp. Bid 2.

CC:

By: **Ralph DeMasi**, Chief Estimator Date:

REQUEST FOR INFORMATION

From: Worth Construction Co., Inc.
24 Taylor Avenue
Bethel, CT 06801
(203) 797-8788
(203) 791-2515 FAX

WCCI RFI No. 007

To: **BL COMPANIES** Fax No.: **(203) 639-8384**

To: **DPW – STATE OF CONNECTICUT**
Attn: **Michael Milne** Fax No.: **(860) 713-7261**

Date: **May 24, 2010**

Project: **SCSU PARKING GARAGE LOT #7**
New Haven, Connecticut

Spec. Section: 01 32 16.13 **Drawing Reference:** N/A

INFORMATION REQUESTED:
In a review of specification section 01 32 16.13 – Construction Schedules, information for the proposed construction scheduling firm is to be submitted with the bid. Please advise if this is a typo or if it will be required at the time of bid, since there is no mention of this requirement within the other bid submission documentation.

Signed: Nicholas A. Torrano

Response Date: 5/26/10 Respondent: Todd Johnson

RESPONSE:

Yes it is required at the time of bid.

cc: RFI Log

May 24 2010 01:42pm P001/001 Fax:

REQUEST FOR INFORMATION

From: Worth Construction Co., Inc.
24 Taylor Avenue
Bethel, CT 06801
(203) 797-8788
(203) 791-2515 FAX

WCCI RFI No. 008

To: **BL COMPANIES** Fax No.: **(203) 639-8384**

To: **DPW – STATE OF CONNECTICUT**
Attn: **Michael Milne** Fax No.: **(860) 713-7261**

Date: **May 24, 2010**

Project: **SCSU PARKING GARAGE LOT #7**
New Haven, Connecticut

Spec. Section: 09 91 00 **Drawing Reference:** ALL

INFORMATION REQUESTED:
Can you please advise the extent of painting requirements for the following exposed materials within the Parking Garage?

1. Electrical conduit
2. Storm drainage and sanitary piping
3. Fire standpipe
4. Galvanized materials

Signed: Nicholas A. Torrano

Response Date: 5/26/10 Respondent: Todd Johnson

RESPONSE:

There is no painting requirement for electrical conduit, storm / Sanitary piping, fire stand pipe and Galvanized materials.

---

cc: RFI Log

Fax: May 24 2010 01:42pm P001/001

GIORDANO
Construction Managers and General Contractors
1155 Main Street
Branford, CT 06405
Phone 203-488-7264
FAX 203-481-5764

FAX

Date: 5-24-10
To: RI Companies
Company:
From: Bedrich Hajek
RE: SCSU - Parking Garage

I have not received Addendum 3, the post prebid meeting Addendum. When will it be released?

Addendum #3 to be Released on 5/26/2010

Number of pages including cover sheet: 1

Receiver's FAX number: 203-639-8384

GIORDANO
Construction Managers and General Contractors
1155 Main Street
Branford, CT 06405
Phone 203-488-7264
FAX 203-481-5764

FAX

Date: 5-25-10
To: BL Companies
Company:
From: Bedrich Hajek
RE: SCSU - Parking Garage CF-RS-273

Section 10831 Banners, since the final design, size and color is to be provided by owner, should there be an allowance for this item? Or we should be given the design, size, color, manufacturer and model number?

Contractor to provide an allowance for Banner. of $5,000.

Number of pages including cover sheet: 1

Receiver's FAX number: 203-639-8384

Nickerson

GENERAL CONTRACTORS

CHN #500-___

REQUEST FOR INFORMATION

RFI No. E-1145-01

ISSUE DATE: 05/24/10

PROJECT: SCSU Lot No. 7 – Parking Garage (CF-RS-273)
ENGINEER: BL Companies (Fax 203-639-8384)
OWNER: CT DPW - Michael Milne (Fax 860-713-7261) **Copy only**

REFERENCE DOCUMENT:

1. Section 00 72 00 (General Conditions), Article 18.2- Please clarify the building permit requirements. Should we include the cost of a City of New Haven Building Permit?
2. Section 31 21 00 (Traffic Control) – You are requiring the Contractor to provide uniformed policemen to act as traffic men in locations that "may be deemed necessary". The requirements for the control of traffic will be dictated as conditions arise, some of which will be outside the influence of the contractor. Please clarify where traffic controls "may be necessary". In lieu of a clarification, could traffic control be made an allowance?
3. Section 01 11 00 – Paragraph 1.01.H (Prolog Project Management) – Please confirm there will be only one training session as required in paragraph 5.
4. Drawing GU1 has several notes requiring the Contractor to pay for the Utility relocations. We can not get a quote from the utilities for this work prior to the bid being submitted. Can all of the work being performed by utilities be made an allowance?
5. Section 071700 (Bentonite Waterproofing) – Please clarify where Bentonite is being installed.
6. Drawing A1.02 (typical) shows vehicle restraint cables on both sides of the ramp walls between column lines 3 & 9. Are these the only locations where vehicle restraint cables are being installed?
7. Drawing DM-1 has a note requiring protection of the existing electric vault on the east end of the site. Please provide a bottom of slab elevation at the vault for the proposed earth support system.
8. Drawing S101A - Should the top of the concrete piers align with the adjacent walls?
9. Section 32 31 19 (Decorative Metal Fencing) – Please clarify where the material defined in this specification is used.
10. Section 32 84 00 (Irrigation System) – Paragraph 1.1.A.2 – Please clarify the location within the lower level of Moore Field House to connect the proposed irrigation system.
11. Drawing S 2.03, detail 10 – Please provide a column schedule.
12. Section 312000 (Earthmoving) Paragraph 2.3.C – Please clarify the fourth sentence "... material may be used under....." Should the below slab material be Free Draining Sand/Gravel as specified in paragraph 2.3.C or Foundation Stone as specified in paragraph 2.1.J?

REQUEST:

BY: _____
Kenneth O'Hara

BL Companies

SCSU LOT #7 PARKING GARAGE
PROJECT NO. CF-RS-273
RFI'S / BID QUESTIONS RESPONSE:

DATE: 5/26/2010

ATTENTION: Nickerson

DISTRIBUTION:

PREPARED BY: Todd Johnson T: Ext.:

EMAIL: Spellman@blcompanies.com

PROJECT NAME: SCSU PROJECT NUMBER: CR-RS-273

SUBJECT: RFI / Bid Questions Nickerson

1. Yes
2. The Connecticut State Special Olympics that are held in the second of June each year on Thursday, Friday, Saturday and Sunday. Contractors would still be able to work but they would need to take extra precaution with deliveries etc. See Addendum #3.
3. The contractor shall provide enough Prolog Project Management training to insure that Owner, Construction Administrator and there representatives, feel competent enough to properly use the software, which may take more then one day.
4. Allowance is provided in Addendum #3
5. Bentonite Waterproofing is used along the footing of the elevator pit. See structural detail 18/S2.02
6. Vehicle Restraint cables are shown on both sides of the wall, between column lines 3 & 6 and 7 & 10 on drawings A1.02, A1.03, A1.04, and A1.05
7. Unknown elevation contractor to field verify.
8. No
9. Decorative Metal Fence is located at retaining wall to the north of Stair #2
10. The location is to be determined.
11. See drawing S1.02A
12. Revise the spec section 2.3.C by deleting the fourth sentence.

ARCHITECTURE
ENGINEERING
PLANNING
LANDSCAPE ARCHITECTURE
LAND SURVEYING
ENVIRONMENTAL SCIENCES

355 Research Parkway
Meriden, Connecticut
06450

800.301.3077 T
203.630.1406 T
203.630.2615 F

blcompanies.com

GENERAL GOVERNMENT TEAM

PREBID CONFERENCE SIGN-IN SHEET

PROJECT NAME: **SCSU PARKING GARAGE LOT# 7 NEW HAVEN, CT** PROJECT NUMBER: **CF-RS-273**

MEETING HELD AT: **615 FITCH ST. HAMDEN, CT** DATE: **MAY 14, 2010**

ATTENDEES: PLEASE PRINT NAME BELOW

NAME	TITLE	FIRM NAME	PHONE/E-MAIL
RALPH DEMARA	ESTIMATOR	MPCC CORP.	914-636-0000 EXT 24 RALPH@MPCCCORP.COM
DEBRA MARTYNOWICZ	PROJ. MANAGER	PIKE CO.	203-228-6695 MARTD@PIKECO.COM
GERRY HOLLAND	CHIEF EST.	RBE	860 242-5565 GHOLLAND@RBEINC.COM
Adam Duczynski	Estimator	Consigli Construction	508-458-0452 aduczynski@consigli.com
DAVID R. LONGO	SENIOR ESTIMATOR	O&G IND.	860-489-9261 davidlongo@ogind.com
Nick Leo	Estimator	J. Kokolakis Contracting	631-744-6147 NRLeo@JKokolakis.com
PETER CHERICHETTI	PROJECT MANAGER	DANIEL O'CONNELL'S SONS	203-672-0691 PCHERICHETTI@OCONNELLS.COM
KEVIN WOOD	V.P.	BIGMARK CONST. CO.	203-876-8331 KWOOD@BIGMARKCONSTRUCTION.COM
ANTHONY MCURCIO	VP	RIZZO CORPORATION	203-731-3131 ACURCIO@RIZZOCORPORATION.COM
Michael Jarvis	Senior PM	Pavarini Const	860-561-1118 Michael.Jarvis@Pavarini.com
Jon Prete	VP	A Prete	203 469 1396 J Prete@aprete.com
* Sherri McKirdy	Acct. Manager	SimplexGrinnell	860-438-3200 x163 SMcKirdy@simplexgrinnell.com

GENERAL GOVERNMENT TEAM

PREBID CONFERENCE SIGN-IN SHEET

PROJECT NAME: **SCSU PARKING GARAGE LOT# 7 NEW HAVEN, CT** PROJECT NUMBER: **CF-RS-273**

MEETING HELD AT: **615 FITCH ST. HAMDEN, CT** DATE: **MAY 14, 2010**

ATTENDEES: PLEASE PRINT NAME BELOW

NAME	TITLE	FIRM NAME	PHONE/E-MAIL
Dave Drake	Estimator	Kronenberger & Sons	800 347 4600 davidd@kronenbergersons.com
RON CASSELLA	V.P.	MANAFORT Brothers	860-229-4853 RCASSELLA@manafort.com
MIKE HENZY	CHIEF EST	PDS ENG & CONST	860-242-8586 mike.henzy@pdsec.com
LOUIS DIGAETANO	~~VET.~~	WORTH CONSTRUCTION	203.797.8788 digaetanol@worthconstruction.com
Steve LeVan	Superintendent	T.B. Penick and Sons	858-752-4823 SteveL@tbpenick.com
CARLO SALVATORE	ESTIMATOR	O+G INDUSTRIES	860-626-6423 CARLOSALVATORE@OGIND.COM
PAUL WOJTOWICZ	PROJ EXECUTIVE	DOWNES CONSTRUCTION	860-229-3755 PWOJTOWICZ@DOWNES@.COM
Bedrich Hajek	Estimator	Giordano Construction	203-483-4363 beh@giordanomail.com
Andrew Pasquini	Estimator	Fusco	203-787-7451 APasquini@fusco.com
GARY COLLETTE	SR. PROJ. MGR.	BARR & BARR INC	(413)739 6257 GCOLLETTE@BARRANDBARR.COM
Jim Alicki	member	Alicki Enterprise LLC	203-619-3168 JAlicki@OPTONLINE.NET
Eric Lessne	Assoc. Dir Pm & Eng	CSU	(860)982-8364 Lessnae@CT.EDU

GENERAL GOVERNMENT TEAM

PREBID CONFERENCE SIGN-IN SHEET

PROJECT NAME: **SCSU PARKING GARAGE LOT# 7 NEW HAVEN, CT** PROJECT NUMBER: **CF-RS-273**

MEETING HELD AT: **615 FITCH ST. HAMDEN, CT** DATE: **MAY 14, 2010**

ATTENDEES: PLEASE PRINT NAME BELOW

NAME	TITLE	FIRM NAME	PHONE/E-MAIL
Scot Robert	Estimating	Greenwood Ind	508-865-4040 kyoung@greenwood-industries.com
Eric Schaffrick	Sales Mgr	Dailey Precast	802-442-4418 x228 escha@daileyprecast.com
Richard Pielli	Proj Ex	Suffolk Constr.	203-752-0406 RPIELLI@SUFFOLKCONSTRUCTION.COM
Ed Janus	Ops Manager	Suffolk Const.	617-217-8847 E janus@suffolkconstruction.com
Ken Restelli	Project Manager	Ferguson Electric	860-747-4566 x221 Lmckim@ferguson-ct.com
David MacKenzie	Estimator	Banton Const.	203-234-2353 dmackenzie@bantonconstruction.com
Derrick Schull	PE LS	CJ Fucci Const	203-469 7487 dschull@cjfucci.com
James Glaser	Asst PM	KBE Building Corp	860-284-7400 bdiamond@KBEBuilding.com Jglaser@KBEBUILDING.com
Javed Choudhry	Director of Est.	A Prete const.	Jchoudhry@Aprete.com
Mark DiPietro	Sales	Unistress Corp	MARK.DIPIETRO@UNISTRESSCORP.COM 413-822-5565
Stephen Saslafsky	Project Mgr	Stephen	203-498-1427 SSASLAFSKY.MCVACENV.COM
Ken O'Hara	V.P. Est.	CH Nickerson	860-489-0455 KOHARA@CHNICKERSON.COM
Robert J Vitelli	VP	Blakeslee	2034915306

GENERAL GOVERNMENT TEAM

PREBID CONFERENCE SIGN-IN SHEET

PROJECT NAME: **SCSU PARKING GARAGE LOT# 7 NEW HAVEN, CT** PROJECT NUMBER: **CF-RS-273**

MEETING HELD AT: **615 FITCH ST. HAMDEN, CT** DATE: **MAY 14, 2010**

ATTENDEES: PLEASE PRINT NAME BELOW

NAME	TITLE	FIRM NAME	PHONE/E-MAIL
CRAIG GILMOUR	SUPERINTENDENT	G. DONOVAN ASSOC. FRANKLIN, CT	860-642-0700 / 642-7994 FAX CHRISTINE@gdonovan.com
RICK LUARHACL	VICE PRESIDENT	The Whiting-Turner Contracting Co.	203 789 8700 RICHARD.LUARHACL@WHITING-TURNER
CHRIS MCFADDEN	PROJECT MANAGER	WHITING-TURNER	203-410-2447 CHRIS.MCFADDEN@WHITING-TURNER.COM
Erik Palen	Estimator	Advanced Caulking	860-402-7143 cadvancedcaulking@sbcglobal.net
DAVID HEER	ESTIMATOR	VIKING CONSTRUCTION	203-353-0260 DAVID.HEER@VIKINGCONSTRUCTION.NET
Tim Martucci	Project Manager	Associated Construction	(860) 296-4114 TMM@ACCGC.COM
ED HERNDON	PRECON MANAGER	HUNTER ROBERTS CC	(212) 321-6919 EHERNDON@HUNTERROBERTSCC.COM
Frank Carbone	Superintendent	Giordano Const	203 483 4359 FMC@Giordanomail.com
JOHN TAYLOR	P.M.	ELECTRICAL CONSTRUCTION	860 621 9657 TAYLORJ@CESC-CT.COM

SOUTHERN CONNECTICUT STATE UNIVERSITY
LOT #7 PARKING GARAGE
NEW HAVEN, CONNECTICUT
PROJECT: CF- RS - 273

BID OPENING	**1:00 P.M.**	**June 9, 2010**
ADDENDUM NUMBER 3	**DATE OF ADDENDUM**	**June 1, 2010**

The following clarifications are applicable to drawings and specifications for the project referenced above.

Item 1

Change the bid opening date from June 9, 2010 @ 1:00 P.M. to June 16, 2010 @ 1:00 P.M.

Mellanee Walton
Associate Fiscal Administrative Officer
Department of Public Works

SOUTHERN CONNECTICUT STATE UNIVERSITY
LOT #7 PARKING GARAGE
NEW HAVEN, CT
PROJECT: CF-RS-273

BID OPENING	**1:00 P.M.**	**JUNE 9, 2010**
ADDENDUM NUMBER TWO	**DATE OF ADDENDUM**	**APRIL 30, 2010**

The following clarifications are applicable to drawings and specifications for the project referenced above.

Item 1

DAS portal calls for a DOT Prequalification, should be **DAS** prequalification

End of Addendum Number TWO

Mellanee Walton
Associate Fiscal Administrative Officer
Department of Public Works

SOUTHERN CONNECTICUT STATE UNIVERSITY
LOT #7 PARKING GARAGE
NEW HAVEN, CT
PROJECT: CF-RS-273

BID OPENING	**1:00 P.M.**	**JUNE 9, 2010**
ADDENDUM NUMBER ONE	**DATE OF ADDENDUM**	**APRIL 29, 2010**

The following clarifications are applicable to drawings and specifications for the project referenced above.

Item 1

Table of Contents

End of Addendum Number One

Mellanee Walton
Associate Fiscal Administrative Officer
Department of Public Works

PROJECT MANUAL TABLE OF CONTENTS

VOLUME 1 of 1

Title	Pages
Table of Contents	5 Pages

DIVISION 00 — PROCUREMENT AND CONTRACTING REQUIREMENTS Subgroup

Section No.	Title	Pages
00 11 16	Invitation to Bidders	4 Pages
00 21 19	Notice to Bidders	13 Pages
00 40 14	Affidavits, Notices and Certifications:	
	• Gift And Campaign Contribution Certification	2 Pages
	• Gift Definitions	2 Pages
	• Annual Certification	2 Pages
	• Consulting Agreement Affidavit	1 Page
	• Summary of State Ethics Laws for Current and Potential State Contractors	1 Page
	• Ethics Affidavit – *General Contractor or Prime Contractor submit with Bid Proposal*	1 Page
	• Affidavit Regarding State Ethics Subcontractors And Subconsultants	1 Page
	• Notice To Executive Branch State Contractors And Prospective State Contractors Of Campaign and Solicitation Ban – SEEC Form 10	1 Page
	• Notice To Executive Branch State Contractors And Prospective State Contractors Of Campaign and Solicitation Ban – SEEC Form 11	3 Pages
	Nondiscrimination Certification	
	• Representation By Individual	1 Pages
	• Representation By Entity	1 Pages
	• Affidavit By Entity	1 Pages
	• New Resolution By Entity	1 Pages
	• Prior Resolution By Entity	1 Pages
	• Certificate	1 Page
00 40 15	Department of Administrative Services (DAS) Pre-qualification Forms :	
	• DAS Contractor Pre-qualification Program - *Directions* for Retrieving Your Certificate	1 Page
	• DAS Contractor Pre-qualification Certificate – Sample – *submit a web one with Bid Proposal*	1 Page
	• DAS Contractor Pre-qualification Update Statement (with Bid) – Sample – *submit a web one with Bid Proposal*	2 Pages

00 41 00	Bid Proposal Form – *submit with Certificate – see below*	14 Pages
00 43 16	Standard Bid Bond Form– *submit with Bid Proposal*	1 Page
00 43 24	Special Unit Prices (Not Used)	0 Page
00 45 14	General Contractor Bidder's Qualification Statement– *submit with Bid Proposal*	5 Pages
00 45 15	Objective Criteria for Evaluating Qualifications of Bidders	2 Pages
00 45 17	Named Subcontractor Bidder's Qualification Statement	6 Pages
00 52 03	Contract	2 Pages
00 52 73	Subcontract Agreement Form	3 Pages
00 62 16	Certificate of Insurance	1 Page
00 72 00	General Conditions of the Contract for Construction	27 Pages
00 73 00	Supplementary Conditions (Not Used)	0 Page
00 73 27	Set-Aside Contractor Schedule	2 Pages
00 73 38	Commission on Human Rights & Opportunities (CHRO) Contract Compliance Regulations	11 Pages
00 73 44	Prevailing Wage Rates/Contractor's Wage Certification/Payroll Certification	29 Pages
00 73 53	Employment Information Forms To Be Submitted After Bid Opening	1 Page
00 73 63	Security Requirements N/A	4 Pages
00 92 00	Amendments (No. 1-A, 2, 3)	2 Pages
00 92 10	Additional Forms To be Submitted After Bond Commission Funding Approval	7 Pages
00 92 20	Executive Orders	1 Page

TECHNICAL SPECIFICATIONS

DIVISION 1 GENERAL REQUIREMENTS Subgroup

Section No.	Title	Pages
01 11 00	Summary of Work	7 Pages
01 20 00	Contract Considerations	6 Pages
01 23 13	Supplemental Bids	2 Pages
01 25 00	Substitution Procedures	5 Pages
01 26 00	Modification Procedures	8 Pages
01 29 76	Application for Payments	6 Pages
01 31 00	Coordination	6 Pages
01 31 19	Project Meetings	5 Pages
01 32 16	Construction Schedules	1 Pages
01 32 16.13	CPM Schedules	20 Pages
01 32 33	Construction Photographs	2 Pages
01 33 00	Submittals	9 Pages
01 35 16	Alteration Project Procedures	1 Pages
01 42 20	Reference Standards & Definitions	4 Pages
01 45 00	Quality Control	6 Pages
01 45 23	Testing for IAQ, Baseline IAQ, & Materials (NEW) + 4 more	6 Pages
01 50 00	Construction Facilities & Temporary Controls	16 Pages
01 57 30	Indoor Environmental Control	3 Pages

01 57 40	Construction IAQ Management Plan	3 Pages
01 60 00	Materials & Equipment	4 Pages
01 71 23	Field Engineering	3 Pages
01 73 29	Cutting and Patching	5 Pages
01 74 19	Construction Waste Management	6 Pages
01 75 00	Starting of Systems	2 Pages
01 77 00	Contract Closeout	7 Pages
01 78 23	Operation & Maintenance Data	6 Pages
01 78 30	Warranties & Bonds	4 Pages
01 80 13	Sustainable Design Requirements	7 Pages
01 91 00	Commissioning	1 Pages

DIVISION 2	EXISTING CONDITIONS	Page Count
Section No.	Title	Pages

DIVISION 3	CONCRETE	Page Count
Section No.	Title	Pages
033000	Cast-In-Place Concrete	23
034100	Plant-Precast Structural Concrete	10

DIVISION 4	MASONRY	Page Count
Section No.	Title	Pages
042000	Unit Masonry	19

DIVISION 5	METALS	Page Count
Section No.	Title	Pages
051200	Structural Steel Framing	11
053100	Steel Decking	5
054000	Cold-formed Metal Framing	11
055000	Metal Fabrications	10
055213	Pipe And Tube Railings	9
055250	Ornamental Welded Steel Fence and Railing Panels	5

DIVISION 6	WOOD, PLASTICS, AND COMPOSITES	Page Count
Section No.	Title	Pages
061000	Rough Carpentry	6

DIVISION 7	THERMAL AND MOISTURE PROTECTION	Page

Section No.	Title	Count Pages
071326	Sheet Membrane Waterproofing	6
071616	Crystalline Waterproofing	3
071700	Bentonite Waterproofing	1
072100	Building Insulation	4
074113	Metal Roof Panels	14
074216	Insulated Core Metal Wall Panels	11
075323	EPDM Single-Ply Membrane Roofing	9
076200	Sheet Metal Flashing And Trim	10
077200	Roof Accessories	4
078413	Penetration Firestopping	9
079200	Joint Sealants	9
079500	Expansion Control	5

DIVISION 8	OPENINGS	Page Count
Section No.	**Title**	**Pages**
081113	Steel Doors And Frames	6
083113	Access Doors And Frames	3
084113	Aluminum Entrances and Storefronts	12
084413	Glazed Aluminum Curtain Walls	11
087100	Finish Hardware	11
088000	Glass and Glazing	8
089000	Louvers and Vents	6

DIVISION 9	FINISHES	Page Count
Section No.	**Title**	**Pages**
092900	Gypsum Board Assemblies	11
093000	Tiling	6
099100	Painting	9

DIVISION 10	SPECIALTIES	Page Count
Section No.	**Title**	**Pages**
101400	Signage	4
104416	Fire Extinguishers	3
108316	Banners	4

DIVISION 11	EQUIPMENT	Page Count
Section No.	**Title**	**Pages**
111200	Parking Control Equipment	5

DIVISION 12	FURNISHINGS	Page Count

Section No.	Title	Pages
129300	Site Furnishings	5

DIVISION 13	SPECIAL CONSTRUCTION	Page Count
Section No.	Title	Pages
	Not used	

DIVISION 14	CONVEYING SYSTEMS	Page Count
Section No.	Title	Pages
142100	Electric Traction Elevators	9

DIVISION 21	FIRE SUPPRESSION	Page Count
Section No.	Title	Pages
210500	Common Work Results For Fire Suppression	5
211200	Fire-Suppression Standpipes	8

DIVISION 22	PLUMBING	Page Count
Section No.	Title	Pages
220500	Common Work Results For Plumbing	6
220529	Hangers And Supports For Plumbing Piping And Equipment	4
220548	Vibration And Seismic Controls For Plumbing Piping And Equipment	3
221113	Facility Water Distribution Piping	9
221313	Facility Sanitary Sewers	10
221319	Sanitary Waste Piping Specialties	3
221329	Sanitary Sewerage Pumps	3
221413	Facility Storm And Sanitary Drainage Piping	5
221423	Storm Drainage Piping Specialties	5

DIVISION 23	HEATING VENTILATING AND AIR CONDITIONING	Page Count
Section No.	Title	Pages
230900	Instrumentation And Control For Hvac	19
230993	Sequence Of Operations For Hvac Controls	4
233113	Metal Ducts	19
233423	HVAC Power Ventilators	8
233713	Diffusers, Registers and Grilles	3
238126	Split-System Air-Conditioners	6

283232	Radiant Heating Electric Panels	4

DIVISION 26	ELECTRICAL	Page Count
Section No.	Title	Pages
260500	Common Work Materials and Methods	5
260513	Medium-Voltage Cables	7
260519	Conductors And Cables 600 Volts and Less	4
260526	Grounding and Bonding	7
260533	Raceways and Boxes	10
260548	Vibration And Seismic Restraints	9
260553	Electrical Identification	9
260923	Lighting Control Devices	9
261200	Medium-Voltage Transformers	7
261300	Medium-Voltage Switchgear	9
262200	Dry-Type Transformers (600 V And Less)	6
262416	Panelboards	10
262726	Wiring Devices	6
262813	Fuses	3
262816	Enclosed Switches And Circuit Breakers	9
262913	Enclosed Controllers	8
264313	Transient Voltage Surge Suppression (TVSS)	7
265100	Interior Lighting	14
265600	Exterior Lighting	12

DIVISION 27	COMMUNICATIONS	Page Count
Section No.	Title	Pages
270000	Telecommunications infrastructure Spaces and Pathways Design Guidelines	14
270500	Telecommunication Systems	82
270501	Face Plate Elevations	19

DIVISION 28	ELECTRONIC SAFETY AND SECURITY	Page Count
Section No.	Title	Pages
283111	Adressable Fire Alarm System	15

DIVISION 31	EARTHWORK	Page Count
Section No.	Title	Pages
310000	Introduction to Sitework Specifications	2
311000	Site Clearing and Grubbing	6
312000	Earth Moving	27
312100	Traffic and Construction	2
312200	Sweeping and Water for Dust Control	2
313000	Water Pollution Control	4

DIVISION 32	EXTERIOR IMPROVEMENTS	Page Count
Section No.	Title	Pages
321216	Asphalt Paving	11
321273	Concrete Paving Joint Systems	6
321313	Concrete Paving	10
321314	Granite Curbing	4
321400	Unit Paving	6
323113	Chain Link Fences and Gates	5
323119	Decorative Metal Fences and Gates	3
323219	Handrails and Railings	3
328400	Irrigation System	17
329200	Turf and Grasses	11
329300	Plants	18

DIVISION 33	UTILITIES	Page Count
Section No.	Title	Pages
330500	Common Work Results for Utilities	6
334100	Storm Utility Drainage Piping	20

INFORMATION AVAILABLE TO BIDDERS

Document No.	Title	Pages
1	Geotechnical Report by Geotechnical Engineering	8
	Boring Location Plan	1
	Test Boring Logs	25

DRAWING LIST

Drawing No.	Sheet Title
	COVER SHEET

END OF TABLE OF CONTENTS

INVITATION TO BID

THRESHOLD BUILDING

FOR PROJECTS ESTIMATED TO COST MORE THAN $500,000.00

ADV. NO.: 10-29 ADV. DATE: April 23, 2010

SEALED BIDS FROM CONTRACTORS WHO HAVE BEEN PREQUALIFIED IN THE DAS CLASSIFICATION NOTED BELOW SHALL BE ADDRESSED TO THE DEPARTMENT OF PUBLIC WORKS - STATE OF CONNECTICUT FOR:

Project Title:	Southern Connecticut State University Lot #7 Parking Garage New Haven, CT
Project Number:	CF-RS-273
DAS Classification:	Group A- General Building Construction
Special Requirement:	N/A
Cost Estimate Range:	$21,058,000. – $23,304,000.
Plans & Specs Ready Date:	April 28, 2010
A NON-REFUNDABLE FEE OF PER SET IS REQUIRED	$135.00 Checks should be made payable to "Treasurer, State Of Connecticut" and should include the prospective bidder's correct mailing address, telephone and fax numbers of where addendum(a) should be submitted. USE A SEPARATE CHECK FOR EACH PROJECT.
Examination or Purchase of Plans & Specs	at the State Of Connecticut, Department Of Public Works, Plans And Specifications Section, Room No. G-36, 165 Capitol Avenue, Hartford, CT 06106, during the hours of 7:30 A.M. to 3:00 P.M. (Monday-Friday) or by addressing a request to the above address.
Pre-Bid Conference:	All prospective bidders are required to attend a MANDATORY Pre-Bid Conference
Pre-Bid Conference Time	to be held AT 10:00 A.M.
Pre-Bid Conference Date	ON May 14, 2010
Pre-Bid Conference Location	AT 615 Fitch Street, Hamden, CT, Facilities Management, 3rd Floor Conference Room 307
Pre-Bid Conference Registration	All prospective bidders are required to *properly* register. *Proper* registration means that the attendee has *signed* his or her name to the official roster and *listed* the name and address of the company he or she represents on the official roster no later than the designated start time of the pre-bid conference. No attendee will be allowed to register *after* the advertised start time of the

	pre-bid conference. Bids submitted by contractors who have *not properly* registered and attended the pre-bid conference shall be *rejected* as non-responsive.
Pre-Bid Conference Contact	Robert Sheeley @203-392-6050
BID OPENING DATE:	June 9, 2010
Receipt of Bid Package	Bids will be received at the State Office Building, 165 Capitol Avenue, Hartford, CT, 06106 in Room No. G-36 UNTIL 1:00 P.M. on the date shown above and thereafter publicly opened and read aloud in Room No. G-32.
Bid Results:	Bid results are posted on the DPW Website in approximately two (2) days after the bid opening date.
Set-Aside Participation	25%
Including MBE/WBE	6.25%
Gift And Campaign Contribution Certification	If awarded the subject contract and the contract has a value of $50,000 or more the contractor will be required to sign and submit, at the time of contract execution, a Gift And Campaign Contribution Certification. See the DPW home page, http://www.ct.gov/dpw, click on Affidavits. For the purposes of signing the Certification, the "date DPW began planning" the subject project or services is such date noted below.
Date DPW Began Planning the Subject Project:	12/7/2006
Summary and Affidavit Regarding State Ethics	Any one seeking a contract with a value of more than $500,000 shall provide with their bid an Ethics Affidavit *located* at CT DPW Website (www.ct.gov/dpw). Failure to provide this affidavit with the bid proposal shall result in rejection of the bid.
Bid Security	As security, *each* bid must be accompanied by a CERTIFIED CHECK made payable to "Treasurer, State of Connecticut," or the bid must be accompanied by a BID BOND, in the form required by the awarding authority and having surety thereto such Surety Company or Companies as are authorized to do business in this State and/or accepted by the Commissioner of the Department of Public Works for an amount not less than 10% of the bid.
Bidders are advised that *both* the DEPARTMENT OF ADMINISTRATIVE SERVICES PREQUALIFICATION CERTIFICATE and UPDATE STATEMENT must accompany the *bid* proposal for projects *estimated* to *exceed* Five Hundred Thousand Dollars ($500,000.00) (C.G.S. 4b-91 as amended). *Failure to supply them with the bid will result in rejection of the bid*	
Department of Administrative Services (DAS) Contractor Prequalification Program: http://www.das.state.ct.us/busopp.asp	
To access Executive Orders: http://www.ct.gov/governorrell/cwp/browse.asp?a=1719&bc=0&c=18433	
To access the Department of Public Works Web Site: http://www.ct.gov/dpw	

Performance and Labor and Material Bonds to be furnished by the bidder awarded the contract shall be an amount not less than 100% of the contract price.

The Commissioner reserves the right to do any of the following without liability, including but not limited to: (a) waive technical defects in the bid proposal as he or she deems best for the interest of the State; (b) negotiate with a contractor in accordance with Connecticut General Statutes Section 4b-91;(c) reject any or all bids; (d) cancel the award or execution of any contract prior to the issuance of the "Notice To Proceed;" and, (e) advertise for new bids.

Nonresident contractors: At the time of contract signing a certificate from the Commissioner of Revenue Services must be provided which evidences that C.G.S. 12-430 for non-resident contractors has been met. For details call the Department of Revenue Services at (860) 541-3280, ext. 7.

EXECUTIVE ORDERS:

The Contract is subject to the provisions of Executive Order No. Three of Governor Thomas J. Meskill, promulgated June 16, 1971, concerning labor employment practices, Executive Order No. Seventeen of Governor Thomas J. Meskill, promulgated February 15, 1973, concerning the listing of employment openings and Executive Order No. Sixteen of Governor John G. Rowland promulgated August 4, 1999, concerning violence in the workplace, all of which are incorporated into and are made a part of the Contract as if they had been fully set forth in it. At the Contractor's request, the Client Agency shall provide a copy of these orders to the Contractor. The Contract may also be subject to Executive Order No. 7C of Governor M. Jodi Rell, promulgated July 13, 2006, concerning contracting reforms and Executive Order No. 14 of Governor M. Jodi Rell, promulgated April 17, 2006, concerning procurement of cleaning products and services, in accordance with their respective terms and conditions.

This contract is subject to the provisions of the Department of Public Works Sexual Harassment Policy ("Policy") and, as such, the contract may be canceled, terminated, or suspended by DPW for violation of or noncompliance with said Policy. Said document is hereby incorporated herein by reference and made a part hereof as though fully set forth herein. This policy may be found at the Department of Public Works Website at http://www.ct.gov/dpw, under Publications.

All technical questions must be in writing (not phoned or emailed) and faxed to the Architect/Engineer with a copy to the DPW Project Manager listed below.

Architect/Engineer/ Consultant:	BL Companies	Fax No:	203-639-8384
Construction Administrator	BL Companies	Fax No:	203-639-8384

DPW Project Manager: Michael Milne Fax No: 860-713-7261

All bid questions should be addressed to the Officer listed below.

Associates Fiscal Administrative Officer: Mellanee Walton Fax No: (860) 713-7395

Contract Time Allowed: 455 Calendar Days

Liquidated Damages: $ 1,783.00 Per Calendar Day beyond Substantial Completion

$ 1,783.00 Per Calendar Day beyond ninety (90) days after Substantial Completion

Prevailing Wage Rates: Prevailing wages are required on this project, in accordance with the schedule provided in the bid documents, pursuant to Connecticut General Statutes Section 31-53 (a) through (h), as amended.

Each contractor who is awarded a contract on or after October 1, 2002 shall be subject to provisions of the Connecticut General Statutes, Section 31-55a concerning annual adjustments to prevailing wages.

Wage Rates will be posted each July 1st on the Department of Labor website: www.ctdol.state.ct.us . Such prevailing wage adjustment shall not be considered a matter for any contract amendment.

The wages paid on an hourly basis to any mechanic, laborer or workman employed upon the work herein contracted to be done and the amount of payment or contribution paid or payable on behalf of each such employee to any employee welfare fund, as defined in subsection (h) of section 31-53 of the Connecticut General Statutes, shall be at a rate equal to the rate customary or prevailing for the same work in the same trade or occupation in the town in which such public works project is being constructed. Any contractor who is not obligated by agreement to make payment or contribution on behalf of such employees to any such employee welfare fund shall pay to each employee as part of his wages the amount of payment or contribution for his classification on each pay day.

Procurement
Department of Public Works