ADDITIONS AND RENOVATIONS
HC WILCOX REGIONAL VOCATIONAL TECHNICAL SCHOOL
MERIDEN, CONNECTICUT
PROJECT: BI-RT- 843

BID OPENING	**1:00 PM**	**September 15, 2010**
ADDENDUM NUMBER 9	**DATE OF ADDENDUM**	**September 10, 2010**

The following clarifications are applicable to drawings and specifications for the project referenced above.

Item 1

Section 00 11 16, Invitation to Bid, the Bid Opening Date is re-scheduled for Wednesday September 22, 2010.

Item 2

Item 2 of Addendum #4 disregard the following statement:

"Prospective Bidders must sign in, at or before 10:00 a.m. and must sign out at the conclusion of the Pre-Bid Conference. Prospective bidders will be denied admittance to the Pre-bid Conference after 10:00 a.m.

Item 3

Item #1 of Addendum #8 shall be disregarded in its entirety.

Item 4

Any bidder who signed the MANDATORY Pre-Bid Conference record of attendance roster must submit the attached revised Bid Proposal Form (Section 00 41 00) when submitting your bid. **Please note the requirement in paragraph 9.0 of the Bid Proposal Form** that all Bidders certify their firm was represented at the MANDATORY Pre-Bid Conference. Any bidder who did not sign the MANDATORY Pre-Bid Conference record of attendance roster is ineligible to bid.

Item 5

The drawings issued as part of Addendum #6 were distributed in a black and white format and should have been in color. A colored CD will be made available on Monday September 13, 2010, at Joseph Merritt to all bidders that require this information. For those that have email and provided it to DPW, DPW Bidding and

Contracts will attempt to email the file of color drawings. If you do not receive the email and do have an email account, please make arrangements with Gail Blythe, 860-713-5794 to receive the email with the color drawings.

All questions must be in writing (not phone or e-mail) and must be forwarded to the consulting Architect/Engineer (Tia Soo Kim Partner, LLC - 860-249-0695) with copies sent to the DPW Project Manager (Barbara Cosgrove - 860-713-7264).

End of Addendum Number NINE

Gail Blythe, Associate Fiscal Administrative Officer
Department of Public Works

THRESHOLD BUILDING

FOR PROJECTS ESTIMATED TO COST MORE THAN $500,000.00

STATE OF CONNECTICUT
DEPARTMENT OF PUBLIC WORKS
BID PROPOSAL FORM

DATE: _____

PROPOSAL OF _____
BIDDER'S LEGAL COMPANY NAME

_____

_____
BIDDER'S ADDRESS

To the Commissioner, Department of Public Works
State Office Building
Hartford, Connecticut

Dear Sir:

1.0 In accordance with Chapter 60 Part II of the Connecticut General Statutes, as amended, and pursuant to, and in compliance with your Invitation to Bid, the Notice to Bidders, the Contract, including the conditions thereto, the Bid Security, I (we) propose to furnish the labor and/or materials, installed as required for the project named and numbered on this Bid Proposal Form, submitted herein, furnishing all necessary equipment, machinery, tools, labor and other means of construction, and all materials specified in the manner and at the time prescribed strictly in accordance with the provisions of the Contract including, but not limited to, the specifications and/or drawings together with all addenda issued by your authority and received prior to the scheduled closing time for the receipt of the bids, and in conformity with requirements of the Awarding Authority and any laws or Departmental regulations of the State of Connecticut or of the United States which may affect the same, for and in consideration of the price(s) stated on the said Bid Proposal Form, hereof.

2.0 The **Lump Sum Base Bid** by me (us) on the Bid Proposal Form *includes* all work indicated on the drawings and/or described in the specifications, except:

2.1 Work covered by **Supplemental Bids** as may be listed on the Bid Proposal Form and General Requirements.

2.2 Contingent Work covered by the **Unit Prices** included within the **General Requirements.**

2.3 Contingent Work covered by the **Contractor Provided Unit Prices** as may be listed on the **Bid Proposal Form** in Section 00 41 00, Item 7.7.

3.0 I (we) *acknowledge* and *agree* to the following:

3.1 To use and accept the **Contractor Provided Unit Prices** on the **Bid Proposal Form,** Section 00 41 00, Item 7.7, as provided by the Contractor in evaluating either additions to or deductions from the Work.

3.2 To use and accept the **Unit Prices** in Section 01 20 00 "Contract Considerations" Division 1 as provided by the Owner in evaluating either additions to or deductions from the Work.

3.3 To use and accept the **Allowances** in Section 01 20 00 "Contract Considerations" Division 1, as part of the Total Contract Sum as listed in Section 7.3 of this Bid Proposal form.

3.4 To use and accept the **Supplemental Bids** in Section 01 23 13, Division 1, as provided by the Contractor, when authorized by the Owner as scheduled in Section 7.6 of this Bid proposal form.

3.5 To complete and submit a **Contractor/Consultant Certification** along with a **Resolution/Certificate of Authority** for contracts with a value of $50,000 or more when requested in the **Letter of Intent**.

DPW Website location http://www.ct.gov/dpw/cwp/view.asp?a=1983&q=289926

This certification must be *updated* **annually** by the *successful* bidder. **Annually**, on *or* within two (2) weeks of the **anniversary** date of the execution of this contract, the Contractor shall submit a completed **Annual Certification** with authorizing resolution to DPW, 165 Capitol Ave., Room G-35, Hartford, CT 06106. For the purposes of this paragraph, the **execution date** of the contract will be the date the Commissioner of DPW signs the contract.

3.6 To hold the bid price for ninety (90) calendar days and any extensions caused by the Contractor's delays in required submissions. The Contractor and the State may mutually agree to extend this period. The agreement to extend the 90-day period may occur after the expiration of the original 90-day period.

The apparent low bidder is required to submit key supporting documents as noted under the caption **Bid Submittal Time Line** at the end of this Section 00 41 00, within ten (10) calendar days of the bid opening, and to submit their Affirmative Action Plan to CHRO within fifteen (15) calendar days of bid opening. If there are any delays in the receipt of these materials then the Bid shall remain valid for the same additional number of days. For example, if the materials are submitted four (4) days later; then the bid shall remain valid for ninety-four (94) days.

3.7 With regard to a State contract as defined in **P.A. 07-01** having a value in a calendar year of $50,000 or more or a combination or series of such **agreements** or **contracts** having a value of $100,000 or more, the **authorized signatory** to this **submission** in response to the State's solicitation expressly **acknowledges receipt** of the **State Election Enforcement Commission's notice** advising prospective state

contractors of the state campaign contribution and solicitation prohibitions, and will inform its principals of the contents of the **notice**. See Attachment **SEEC Form 10 and 11**.

3.8 To comply with the Department of Correction's **Security Regulations For Contract Forces**, Section 00 73 63.

4.0 This Bid Proposal Form is submitted to and in compliance with the foregoing and following conditions and/or information:

4.1 AWARD

4.1.1 All proposals shall be subject to provisions of **Article 1 of the Notice to Bidders** and for purpose of award, consideration shall be given only to Bid Proposals submitted by qualified and responsible bidders.

4.1.2 The award shall be made on the **lowest Lump Sum Bid** as stated in Section 7.3 of this Bid Proposal Form and any or all **Supplemental Bids** as stated in Section 7.6 of this **Bid Proposal Form**, taken sequentially, as applicable, provided funds are available.

4.1.3 In the event of any **discrepancy** between the amount written in words and the amount written in numerical figures, the amount written in words shall be controlling.

4.2 COMMENCEMENT AND ACCEPTANCE (ARTICLE 4 GENERAL CONDITIONS)

4.2.1 The General Contractor shall commence Work within **fourteen** (14) **calendar days** *after* receiving "Construction Start Date and Notice To Proceed" by the Commissioner or the authorized representative and continue for One thousand one hundred twenty five **(1,125)** calendar days for completion of the project.

4.3 LIQUIDATED DAMAGES: (ARTICLE 8, GENERAL CONDITIONS)

4.3.1 The General Contractor shall be assessed **$4,432.00** per day for each calendar day *beyond* the Date established for Substantial Completion of the Contract according to the **Contract Time** as defined in Article 1.28 of the General Conditions, and not otherwise excused or waived pursuant to the Contract Documents, as defined in Article 1.23 of the General Conditions.

4.3.2 The General Contractor shall be assessed **$3,430.00** per day for each calendar day *beyond* ninety (90) days *after* the date of said Substantial Completion that the Contractor fails to achieve **Acceptance**, as defined in Article 1.1 of the General Conditions and not otherwise excused or waived as described above.

4.4 CONTRACTOR'S INSURANCE REQUIRED: (ARTICLE 35, GENERAL CONDITIONS)

4.4.1 The **limits of liability** for the Insurance required for this project shall be those listed in Article 35 of the General Conditions.

4.4.2 SPECIAL HAZARDS INSURANCE REQUIRED:

None Required

4.4.3 BUILDERS RISK INSURANCE

The General Contractor shall maintain Builder's Risk insurance providing coverage for the entire Work at the project site, and shall also cover portions of the Work located away from the site but intended for use at the site, and shall also cover portions of the Work in transit. Coverage shall be written on an All-Risk, Replacement Cost, and completed Value Form basis in an amount at least equal to the projected completed value of the Work and the policy shall state that it is for the benefit of and payable to the state of Connecticut.

4.5 **NOT USED**

4.6 The General Contractor on this project shall be required to award not less than **25%** of the total Contract Sum to contractors who are certified and eligible to participate under The State of Connecticut Set-Aside Program for **small** contractors, including **6.25%** to certified and eligible **Minority Business Enterprises**, in accordance with Connecticut General Statutes Section 4a-60g.

4.6.1 This requirement *must be met even if* the **General Contractor** is *certified* and *eligible* to participate in the **Small Business Set-Aside Program**. To facilitate compliance with this requirement for set-aside subcontractors, the three (3) **apparent low bidders** will have ten (10) calendar days from the date of bid opening within which to submit a **list of certified set-aside contractors** to be used on this project along with the **dollar amounts** to be paid to each, on the form provided, and a copy of their **current certification** must be attached. This information will be considered as part of your Bid Proposal Form and **failure** to comply with any portion of this requirement within the ten (10) days, including but not limited to **failure** to list or meet the necessary dollar amount or percentage of the bid price will be cause to **reject** your bid.

4.7 BIDDER'S QUALIFICATION STATEMENT AND OBJECTIVE CRITERIA FOR EVALUATING QUALIFICATIONS OF BIDDERS:

4.7.1 Information in regards to the General Contractor's and the Named Subcontractor's Bidder's Qualification is submitted and is made part of this Bid Proposal Form. **Note: Individual Specification Sections may contain General Contractor and/or Subcontractor Qualification requirements that exceed those in Section 00 45 15, "Objective Criteria Established for Evaluating Qualifications of Bidders."**

4.7.1.1 The **General Contractor** is required to complete the **General Contractor Bidder's Qualification Statement** in section 00 45 14.

4.7.1.2 Any **Named Subcontractor** as listed in schedule 7.5.1 of this Bid Proposal Form is required to complete the **Named Subcontractor Bidder's Qualification Statement** in section 00 45 17. To facilitate compliance with this requirement, the three (3) apparent low bidders will have **ten** (10) calendar days, from the bid opening date, to submit the completed Named Subcontractor Bidder's Qualification Statement as required in section 00 45 17. This information will be considered as part of your Bid Proposal Form and failure to comply with any portion of this requirement will be **cause to reject** your bid.

4.7.2 The **Objective Criteria for Evaluating Bidders** that are included in Division 0, Section 00 45 15, of this Project Manual, is to assure that the State of Connecticut will secure the "lowest responsible and qualified bidder" who has the ability and capacity to successfully complete the Bid Proposal Form and the Work.

4.8 NONDISCRIMINATION AND LABOR RECRUITMENT:

4.8.1 The Contract is subject to the provisions of Executive Order No. Three of Governor Thomas J. Meskill, promulgated June 16, 1971, concerning labor employment practices, Executive Order No. Seventeen of Governor Thomas J. Meskill, promulgated February 15, 1973, concerning the listing of employment openings and Executive Order No. Sixteen of Governor John G. Rowland promulgated August 4, 1999, concerning violence in the workplace, all of which are incorporated into and are made a part of the Contract as if they had been fully set forth in it. At the Contractor's request, the Client Agency shall provide a copy of these orders to the Contractor. The Contract may also be subject to Executive Order No. 7C of Governor M. Jodi Rell, promulgated July 13, 2006, concerning contracting reforms and Executive Order No. 14 of Governor M. Jodi Rell, promulgated April 17, 2006, concerning procurement of cleaning products and services, in accordance with their respective terms and conditions.

4.9 FEDERAL & STATE WAGE DETERMINATIONS:

4.9.1 The U. S. Secretary of Labor's latest decision and the State of Connecticut Wage Schedule are all incorporated in the documents. The higher rate (Federal or State) for any given occupation shall prevail. At the time of bidding, the bidder agrees to accept the current prevailing wage scale, as well as the annual adjustment to the prevailing wage scale, as provided by the Connecticut Department of Labor.

4.10 CERTIFICATION OF BIDDER REGARDING EQUAL EMPLOYMENT OPPORTUNITY & NON-SEGREGATED FACILITIES:

4.10.1 The General Contractor and Subcontractors are hereby advised that upon acceptance of their bids they are obligated to fill out within seven (7) calendar

days the certification required pursuant to Executive Order No. 11246, and agree to certify to the compliance of non-segregated facilities.

4.11 EQUALS AND SUBSTITUTION REQUESTS PROCEDURES:

4.11.1 All submissions requesting "Equals and/or Substitutions" shall be made by the **Contractor** in accordance with **Article 15** of the **General Conditions** and **Section 01 25 00** of the **General Requirements**. All submissions shall contain all the information necessary for the Department of Public Works to evaluate the submission and the request. Failure to submit sufficient information to make a proper evaluation, including submittal of data for the first manufacturer listed as well as the data for the "Equals and/or Substitutions" proposed, shall result in a **rejection** of the submission and request. Upon receipt of the submission and request the Department of Public Works shall notify the Contractor the request has been received and as soon as possible shall render a decision on such submission and request.

4.11.2 **Pre-Bid Opening Substitution of Materials and Equipment:** The Owner will consider requests for equals or substitutions *if* received **fourteen** (14) days *prior* to the **Bid Opening**. The **Equal or Substitute Product Request Form 701** must be used to submit request. This **form** may be found in the **DPW Website**.

4.11.3 Request for Equal or Substitution shall be submitted to the **DPW Project Manager and Architect or Engineer**.

4.11.4 Any substitution request not complying with requirements will be denied. Substitution request sent *after* the **deadline** will be denied.

4.11.5 An **Addendum** shall be issued to inform all prospective bidder of any accepted substitution in accordance with our addenda procedures.

4.11.6 No extension of time will be allowed for the time period required for consideration of any Substitution or Equal.

4.11.7 **Post Contract Award Substitution Of Materials And Equipment:** All Requests For "Equals And Substitutions" *after* the Award of the Contract shall be made *only* by the **General Contractor** in accordance with Article 15, Materials: Standards, Section 00 72 00 General Conditions Of The Contract For Construction.

5.0 ACCOMPANYING THIS PROPOSAL IS:

5.1 A CERTIFIED CHECK drawn to the order of – Treasurer, State of Connecticut, in the which it is understood shall be cashed and the proceeds thereof used so far as may be necessary to reimburse the State of Connecticut for losses and damages arising by virtue of my (our) failure to file the required Bonds and execute the required contract if this proposal is accepted by the Awarding Authority.

OR

5.2 A BID BOND having as surety thereto a Surety Company or Companies authorized to transact business in the State of Connecticut and made out in the penal sum of 10% of the bid.

5.3 GIFT AND CAMPAIGN CONTRIBUTION CERTIFICATE AT TIME OF CONTRACT EXECUTION

5.4 A DEPARTMENT OF ADMINISTRATIVE SERVICES (DAS) CONTRACTOR PRE-QUALIFICATION CERTIFICATE

The DAS Prequalification Certificate is required for projects estimated to exceed $500,000.00 (C.G.S. 4b-91 as amended)

5.5 A DEPARTMENT OF ADMINISTRATIVE SERVICES (DAS) UPDATE STATEMENT

The DAS Update Statement is required for projects estimated to exceed $500,000.00 (C.G.S. 4b-91 as amended)

5.6 CHECKLIST OF INCLUDED ITEMS WITH BID PROPOSAL AT TIME OF BID PROPOSAL SUBMITTAL

	IMPORTANT:	
Item	A. All forms below must be included when you submit your bid package. B. Failure to submit any of items marked below with an **asterisk** (*) shall cause rejection of the bid and shall not be considered a minor irregularity under CGS 4b-95.	**Section**
1 *	**Bid Proposal Form***	00 41 00
2 *	Appropriate Resolution or **Certificate** (of authority*)	00 40 14
3 *	**Ethics Affidavit (Regarding State Ethics)** (New July 1, 2005)*	00 40 14
4 *	Department of Administrative Services **Pre-qualification Certificate***	00 40 15
5 *	Department of Administrative Services **Update Statement** *	00 40 15
6 *	**Standard Bid Bond** or Certified Check*	00 43 16
7	**General Contractor Bidder's Qualification Statement**	00 45 14

6.0 I (we), the undersigned, hereby declare that I am (we are) the only person(s) interested in the Bid Proposal and that it is made without any connection with any other person making any Bid Proposal for the same work. No person acting for, or employed by, the State of Connecticut is directly or indirectly interested in this Bid Proposal, or in any Contract which may be made under it, or in expected profits to arise therefrom. This Bid Proposal is made without directly or indirectly influencing or attempting to influence any other person or corporation to bid or refrain from bidding or to influence the amount of the Bid Proposal of any other person or corporation. This Bid Proposal is made in good faith without collusion or connection with any other person bidding for the same work and this proposal is made with distinct reference and relation to the plans and specifications prepared for this Contract. I (we) further declare that in regard to the

conditions affecting the Work to be done and the labor and materials needed, this Bid Proposal is based solely on my (our) own investigation and research and not in reliance upon any representations of any employee, officer or agent of the State.

7.0 Each **class of Work** set forth in a separate section of the specifications pursuant to this Section shall be a **subtrade** designated in Schedule 7.5.1 of this Bid Proposal Form and shall be the matter of a **subcontract** made in accordance with the procedure set forth in this chapter.

7.1 The undersigned proposes to furnish all labor and materials required for

Project Number: BI-RT-843
Project Title: Additions and Renovations
HC Wilcox Regional Vocational Technical School
298 Oregon Road
Meriden, Connecticut

in accordance with the accompanying Plans and Specifications

Prepared by: Tia Soo Kim Partners, LLC
146 Wyllys Street, Suite 1-203
Hartford, CT 06106
Engineer/Architect

for the Contract Sum specified in Section 7.3 subject to **additions** and **deductions** according to the terms of the specifications.

7.2 This Bid Proposal includes _____ number of **Addenda/Addendum.**

7.2.1 The **Contractor is to fill in item 7.2 above**, acknowledging the number of Addenda that the Contractor is including in the Bid Proposal Form. Failure to acknowledge all **addenda** in the space provided in the Bid Proposal Form shall be cause for **rejection** of the bid.

7.3 **THE PROPOSED CONTRACT PRICE IS AS FOLLOWS:**

$ [ ][ ] , [ ][ ][ ] , [ ][ ][ ] . [ ][ ]

(Place figures in appropriate boxes.)

_____ DOLLARS

(Written Amount)

7.3.1 In Accordance With Section 4.6 Not Less Than **25%** Of This Total Must be Awarded to Certified **Set-Aside** Contractors, including **6.25% Minority Business Enterprises. Failure** to Meet This Requirement Will Be Cause To **Reject** Your Bid.

7.4. **NOT USED**

7.5 **Subcontractors and their price must be listed for the trades identified in Schedule 7.5.1.**

FAILURE TO PROPERLY COMPLETE THIS SECTION ACCORDING TO THE BELOW INSTRUCTIONS SHALL RESULT IN REJECTION OF THE BID.

SCHEDULE 7.5.1 – NAMED SUBCONTRACTORS

Description	Name of Subcontractor	Amount Dollars	Labor & Material Payment Bond	Performance Bond	State of CT D.C.P. License/ Registration No. Format: Prefix - No. - Suffix
1. Electrical	_____	$ _____	_____ %	_____ %	_____
2. Plumbing	_____	$ _____	_____ %	_____ %	_____
3. HVAC** **HVAC (includes all controls)	_____	$ _____	_____ %	_____ %	_____
4. Masonry	_____	$ _____	_____ %	_____ %	_____
5. Sprinkler	_____	$ _____	_____ %	_____ %	_____

On and after October 1, 2007, no person whose **subcontract** *exceeds* five hundred thousand dollars in value may perform work as a **subcontractor** on a project estimated to cost more than five hundred thousand dollars, unless the person is **prequalified** in accordance with section 4a-100, as amended by **Public Act 06-134**.

7.5.2 List the *name* and *price* of each **Named Subcontractor** that will perform the **work** of the trades listed in Schedule 7.5.1.

7.5.3 The **General Contractor** *may* list **itself** together with its **price (failure to provide both will be cause for rejection),** *if* it customarily performs any of the trades specified. *If* the General Contractor leaves the spaces for a specific "Trade Description" *completely blank*, it will be *assumed* that the General Contractor will perform that Work.

7.5.4 *If* the General Contractor requires a **Performance** and/or **Labor and Material Payment Bond**, *then* the General Contractor must indicate in Schedule 7.5.1

which of the Named Subcontractors are subject to this requirement. The amount (%) shall not exceed the Named Subcontractor's price listed in Schedule 7.5.1.

7.5.5 The undersigned *agrees* that each of the **Named Subcontractors** listed in Schedule 7.5.1 of the Bid Proposal Form will be used for the **Work** indicated at the **amount stated**, *unless* a **substitution** is permitted by the awarding authority as provided for in section 00 21 19 Notice to Bidders.

7.6 Any **Supplemental Bids** listed in schedule 7.6.1, *if* accepted by the Owner, will be taken cumulatively and in numerical order as scheduled. No Supplemental Bid will be skipped or taken out of numerical order as scheduled. Supplemental Bids: Division 1, Section 01 23 13 of the **General Requirements** identify and describe the Supplemental Bids as shown in Schedule 7.6.1.

SCHEDULE 7.6.1 – SUPPLEMENTAL BIDS	
Supplemental Bid No.: 1	Provide all labor, material and equipment to complete the Work in accordance with Division 1, Section 01 23 13. ADD: _____ Dollars $ _____. (Written Amount)
Supplemental Bid No.: 2	Provide all labor, material and equipment to complete the Work in accordance with Division 1, Section 01 23 13. ADD: _____ Dollars $ _____. (Written Amount)
Supplemental Bid No.: 3	Provide all labor, material and equipment to complete the Work in accordance with Division 1, Section 01 23 13. ADD: _____ Dollars $ _____. (Written Amount)
Supplemental Bid No.: 4	Provide all labor, material and equipment to complete the Work in accordance with Division 1, Section 01 23 13. ADD: _____ Dollars $ _____. (Written Amount)
Supplemental Bid No.: 5	Provide all labor, material and equipment to complete the Work in accordance with Division 1, Section 01 23 13. ADD: _____ Dollars $ _____. (Written Amount)
Supplemental Bid No.: 6	Provide all labor, material and equipment to complete the Work in accordance with Division 1, Section 01 23 13. ADD: _____ Dollars $ _____. (Written Amount)
Supplemental Bid No.: 7	Provide all labor, material and equipment to complete the Work in accordance with

	Division 1, Section 01 23 13. ADD: _____ Dollars $ _____. (Written Amount)
Supplemental Bid No.: 8	Provide all labor, material and equipment to complete the Work in accordance with Division 1, Section 01 23 13. ADD: _____ Dollars $ _____. (Written Amount)
Supplemental Bid No.: 9	Provide all labor, material and equipment to complete the Work in accordance with Division 1, Section 01 23 13. ADD: _____ Dollars $ _____. (Written Amount)

7.7 **Contractor Provided Unit Prices** are not needed for this project.

7.8 The **undersigned** agrees that *if* selected as the General Contractor, I (we) shall, within **seven** (7) calendar days (legal State holidays excluded) *after* notification thereof by the awarding authority, *execute* a **Contract** in accordance with the terms of this Bid Proposal Form and Contract.

7.9 The undersigned agrees and warrants that they have made **good faith efforts** to employ **minority business enterprises** as **Subcontractors** and **suppliers** of materials under such Contract and shall provide the Commission on Human Rights and Opportunities with such information as is requested by the Commission concerning their **employment practices and procedures** as they relate to the current provisions of the Connecticut General Statutes governing Contract requirements.

7.10 This project is a "Threshold Building" and subject to all Statutory provisions as stated in Amendment No. 2 of the specifications Section 00 92 00 article 2.1.

8.0 CONFIDENTIALITY OF DOCUMENTS

8.01 The **undersigned** agrees that if not selected as the General Contractor for this project, all plans and specifications in their possession for the project shall be destroyed.

8.02 The **undersigned** agrees that if selected as the General Contractor for this project:

8.02.1 The **plans and specifications** shall not be disseminated to anyone except for construction of this project.

8.02.2 The following **provision** shall be included in all of its contracts with subcontractors and sub-consultants:

> Any and all drawings, specifications, maps, reports, records or other documents associated with the contract shall only be utilized to the extent necessary for the performance of the work and duties under this contract. Said drawings,

specifications, maps, reports, records and other documents may not be released to any other entity or person except for the sole purpose of the work described in this contract. No other disclosure shall be permitted without the prior written consent of the Department of Public Works. When any such drawings, specifications, maps, reports, records or other documents are no longer needed, they shall be destroyed."

8.02.3 Upon completion of the construction and the issuance of a certificate of occupancy, the plans and specifications shall be returned to the Department of Public Works, or destroyed, or retained in a secure location and not released to anyone without first obtaining the permission of the Department of Public Works.

9.0 A duly authorized representative of the Bidder or Bidder's partnership, firm, corporation or business organization must sign all Bid Proposals Forms.

(NO FACSIMILE SIGNATURE IS PERMITTED).
ALL INFORMATION BELOW IS TO BE FILLED IN BY THE BIDDER.

Project Number BI-RT-843

Firm Name _____
Complete BIDDER'S LEGAL COMPANY NAME

General Contractor's State of Connecticut, D.C.P. License/ Registration No. _____
(Applicable for Threshold Building projects only. Insert "N/A" if notapplicable. Refer to Item 7.10)

Firm Federal Employer Identification Number _____

Firm CT Tax Registration Number _____

Firm Address _____
Street City State Zip Code

Telephone Number _____

FAX Number _____

E-mail Address _____

Type of Business (check one):

____Corporation

____Limited Liability Corporation (**LLC**)

____Partnership

____Sole Proprietor

____Doing Business As (d/b/a), if yes, provide complete name **below:**

_____

_____

_____

Corporate Seal, *if* a Corporation

Provide Exact Wording on Corporate Seal **below**:

_____

_____

_____

This Bid Submission is **only** for Contractors who are **Certified** in the **DAS Prequalification Classification** noted in the **Invitation to Bid**.

A *Resolution/Certificate of Authority* must be submitted with your Bid Proposal.

Signed this _____ **day of** _____ **20** _____

Bidder's Signature _____ _____
Duly Authorized Title

_____ _____
Print Name Date

I (we), the undersigned, hereby declare that a representative of our firm attended the MANDATORY Pre-Bid Conference at Wilcox Technical High School on Tuesday August 10, 2010 at 10:00 AM. Bids submitted by contractors who cannot certify they were in attendance at this MANDATORY Pre-Bid Conference shall be rejected as ***non-responsive.***

The apparent three low bidders are required to submit key supporting documents as noted on the following page within ten (10) calendar days of the bid opening, while the apparent low bidder is required to submit his Affirmative Action Plan to CHRO within fifteen (15) calendar days of bid opening. If there are any delays in the receipt of these materials then the Bids shall remain valid for the same additional number of days. For example, since, the apparent three low bidders are

required to hold the bid price for ninety (90) calendar days and any extensions caused by the Contractor's delays in required submissions, if materials are submitted four (4) days later; then the bid shall remain valid for ninety-four (94) days.

Failure to meet the below stated deadlines may result in rejection of the bid at the sole discretion of the Commissioner of Public Works.

Bid Submittal Time Line

SUBMITTALS **DUE** WITHIN 10 CALENDAR DAYS **AFTER** BID OPENING
(From the Apparent **Three** Low Bidders):

1. Section 00 73 27 DPW Set-Aside Schedule:
2. Listing of certified set aside contractors Subs with name, address, amount and whether a subcontractor or a supplier or both
3. DAS Set-Aside Subcontractor Certificate of Eligibility (SBE's & MBE's)
4. Section 00 45 17 Named Subcontractor Bidder's Qualification Statements
5. Named Subcontractor's DAS Prequalification Certificate, when applicable

SUBMITTALS **DUE** WITHIN 15 CALENDAR DAYS **AFTER** BID OPENING
(From the **Apparent Low Bidder**):

1. Affirmative Action Plan to CHRO
2. Affirmative Action Plan Transmittal Letter Copy to DPW Procurement
3. Section 00 73 53 Affidavit for Certified Subcontractors as MBE's
4. Section 00 73 44 Wage Certification to DOL
5. On your letterhead, list of all named subcontractors, address and contact person
6. Scope Review conducted

SUBMITTALS **DUE** WITHIN 10 BUSINESS DAYS **AFTER** BOND COMMISSION FUNDING APPROVAL VIA EXPRESS/OVERNIGHT MAIL (From The **Apparent Low** Bidder):

1. Section 00 52 73 Subcontractor Agreements (Named & Listed)

SUBMITTALS **DUE** WITHIN 10 BUSINESS DAYS **AFTER** THE LETTER OF INTENT

1. Section 00 62 16 Insurance Certificate Form
2. Section 00 92 10 Performance Bond
3. Section 00 92 10 Labor & Material Bond
4. Section 00 92 10 Surety Sheet
5. Power of Attorney from the Surety Company
6. Section 00 40 14 Certificate of Authority/Resolution - Certificate

7. Asbestos Abatement Liability Insurance (for asbestos abatement only)
8. Motor Vehicle Pollution Liability for Asbestos Abatement (for asbestos abatement only)
9. Section 00 92 10 Non-Residents Certificate - DRS - Guarantee Bond (form AU-766)
10. Section 00 92 10 Bidder's Certificate: Financial Position & Corporate Structure
11. Section 00 52 03 Contract
12. Section 00 40 14 Affidavit Regarding State Ethics – for each Named Subcontractor
13. Section 00 40 14 Gift And Campaign Contribution Certification
14. Section 00 40 14 Consulting Agreement Affidavit
15. Certificate of Legal Existence from Corporations

END OF SECTION

ADDITIONS AND RENOVATIONS
HC WILCOX REGIONAL VOCATIONAL TECHNICAL SCHOOL
MERIDEN, CONNECTICUT
PROJECT: BI-RT- 843

BID OPENING	**1:00 PM**	**September 15, 2010**
ADDENDUM NUMBER 8	**DATE OF ADDENDUM**	**September 8, 2010**

The following clarifications are applicable to drawings and specifications for the project referenced above.

Item 1

Section 00 11 16, Invitation to Bid, Pre-Bid Conference Registration, Add:

A General Contractor that listed a sign in time and a sign out time on the Pre-Bid Conference Record of Attendance (issued as part of Addendum #6 Item 4) is eligible to bid directly to the State of Connecticut.

The following deems a general contractor ineligible to bid directly State of Connecticut:

- A General Contractor who listed only a time in on the Record of Attendance is not eligible to bid.
- A General Contractor who listed only a time out on the Record of Attendance is not eligible to bid.
- A General Contractor who did not list a time in and a time out on the Record of Attendance is not eligible to bid.

Bids received from ineligible bidders will be returned unopened.

Item 2

In Addenda No. 6, Item 18, CHANGE the manufacturer from SimplexGrinnell LP to "NOTIFIER; a GE-Honeywell Company".

Item 3

In Drawing P5.01, ADD to fixture "A.N." the following: Provide a Silver Recovery Unit upstream of the acid neutralization tank as manufactured by Town and Country model SR-5 or equal. Include one replacement cartridge.

All questions must be in writing (not phone or e-mail) and must be forwarded to the consulting Architect/Engineer (Tia Soo Kim Partner, LLC - 860-249-0695) with copies sent to the DPW Project Manager (Barbara Cosgrove - 860-713-7264).

End of Addendum Number EIGHT

Gail Blythe, Associate Fiscal Administrative Officer
Department of Public Works

ADDITIONS AND RENOVATIONS
HC WILCOX REGIONAL VOCATIONAL TECHNICAL SCHOOL
MERIDEN, CONNECTICUT
PROJECT: BI-RT- 843

BID OPENING	**1:00 PM**	**September 15, 2010**
ADDENDUM NUMBER 7	**DATE OF ADDENDUM**	**September 8, 2010**

The following clarifications are applicable to drawings and specifications for the project referenced above.

Item 1

Please use the attached revised bid proposal form (Section 00 41 00) when submitting your bid.

Item 2

In the Project Manual, Table of Contents, ADD the following below Appendix #3:

Appendix #4.

Item 3

ADD Appendix #4.

Item 4

DELETE Section 020226, "Excavation of PCB Remediation Waste Soils".

SUBSTITUTE Section 020226, "Excavation of PCB Remediation Waste Soils", with Footer "Addendum No. 7."

Item 5

DELETE Section 028215, "Abatement of PCB Contaminated Building Materials".

SUBSTITUTE Section 028215, "Abatement of PCB Contaminated Building Materials", with Footer "Addendum No. 7."

Item 6

Section 089550, Paragraph 2.2, A.1, CHANGE color to "Standard Cast (Textured Surface)".

Item 7

Section 102800, Paragraph 2.2, D.1, CHANGE model number to B-4112.

Item 8

Section 102800, Paragraph 2.2, F.1, CHANGE model number to B-270.

Item 9

Section 102800, Paragraph 2.2, G.1, CHANGE model number to B-4354.

Item 10

Section 102800, Paragraph 2.2, I.1, CHANGE model number to B-4369.

Item 11

Section 102800, Paragraph 2.2, J.1, CHANGE model number to B-165/B290.

Item 12

Section 105113, DELETE Paragraph 1.4, F.

Item 13

Section 105113, Paragraph 2.3, G, DELETE the words "Self-closing".

Item 14

In Drawings ASB1.01, ASB1.02, ASB1.03, ASB1.04, ASB1.05, ASB1.06, ASB1.07, and ASB1.08, ADD the following to the Asbestos Abatement Keynotes:

"A Remove Wall Construction As ACM"

Item 15

In Drawing LBP1.01, CHANGE drawing to indicate the removal of all lead based paint from the existing metal deck between column lines XB1 and XB2.

Item 16

In Drawing A1.04, ADD 16" diameter concrete column surround to columns XB27/XBG and XB28/XBG per SKA-22.

Item 17

In Drawing A1.07, ADD Fire Extinguishers per SKA-23.

Item 18

In Drawing A2.02, CHANGE detail key per SKA-24.

Item 19

In Drawing A2.11, Detail 12, CHANGE per SKA-25.

Item 20

In Drawing A4.04, Detail 2, REVISE per SKA-26.

Item 21

In Drawing A4.37, Detail 3, ADD the following note: Concrete column surrounds to be 16" diameter, split-formed, with 6 x 6 - W2.0 x W2.0 welded wire fabric, typical all locations.

Item 22

In Drawing A7.02, Detail 6, CHANGE note to read "For Sanitary Napkin Disposal Unit In Women's Toilet, Refer to 5/A7.02 for typical location."

Item 23

In Drawing A8.15, ADD concrete column surrounds per SKA-27.

Item 24

In Drawing S0.07, DELETE detail titled "Typical Framing Detail For New Roof Top Units At Existing Roof Framing."

Item 25

In Drawings S1.06, S1.07A, S1.07B, S1.08, S1.09, S1.10, S1.12, S1.13A, S1.13B, and S1.14, Contractor Note, DELETE the sentence "Provide an allowance for roof frames and penetrations not shown in framing plans."

Item 26

In Drawing P4.01, DELETE detail 5.

Item 27

In Drawing P5.01, DELETE the water detection system from the schedule.

Item 28

In Drawing P5.01, DELETE OS-3 from the schedule.

Item 29

In Drawing P5.02, ADD the following to the Pipe and Fitting Schedule:

Underground Gas Piping, 2" and below: Permapipe Ultra FS or equivalent with Schedule 40 grade B seamless carrier pipe with welded joints. Oouter jacket shall be fiberglass around steel pipe. Provide welded end glands with vent ports to vent interstitial space inside of building where pipe terminates above grade. Install per manufacturers requirements.

Item 30

In Drawing P1.06, CHANGE note regarding compressor to read, "Relocated existing air compressor and new oil separator, air dryer, filter and pressure regulator valve. Install per detail 6 on P4.01.

All questions must be in writing (not phone or e-mail) and must be forwarded to the consulting Architect/Engineer (Tia Soo Kim Partner, LLC - 860-249-0695) with copies sent to the DPW Project Manager (Barbara Cosgrove - 860-713-7264).

End of Addendum Number SEVEN

Gail Blythe

Gail Blythe, Associate Fiscal Administrative Officer
Department of Public Works

THRESHOLD BUILDING

FOR PROJECTS ESTIMATED TO COST MORE THAN $500,000.00

STATE OF CONNECTICUT
DEPARTMENT OF PUBLIC WORKS
BID PROPOSAL FORM

DATE: _____

PROPOSAL OF _____
BIDDER'S LEGAL COMPANY NAME

_____

_____
BIDDER'S ADDRESS

To the Commissioner, Department of Public Works
State Office Building
Hartford, Connecticut

Dear Sir:

1.0 In accordance with Chapter 60 Part II of the Connecticut General Statutes, as amended, and pursuant to, and in compliance with your Invitation to Bid, the Notice to Bidders, the Contract, including the conditions thereto, the Bid Security, I (we) propose to furnish the labor and/or materials, installed as required for the project named and numbered on this Bid Proposal Form, submitted herein, furnishing all necessary equipment, machinery, tools, labor and other means of construction, and all materials specified in the manner and at the time prescribed strictly in accordance with the provisions of the Contract including, but not limited to, the specifications and/or drawings together with all addenda issued by your authority and received prior to the scheduled closing time for the receipt of the bids, and in conformity with requirements of the Awarding Authority and any laws or Departmental regulations of the State of Connecticut or of the United States which may affect the same, for and in consideration of the price(s) stated on the said Bid Proposal Form, hereof.

2.0 The **Lump Sum Base Bid** by me (us) on the Bid Proposal Form *includes* all work indicated on the drawings and/or described in the specifications, except:

2.1 Work covered by **Supplemental Bids** as may be listed on the Bid Proposal Form and General Requirements.

2.2 Contingent Work covered by the **Unit Prices** included within the **General Requirements**.

2.3 Contingent Work covered by the **Contractor Provided Unit Prices** as may be listed on the **Bid Proposal Form** in Section 00 41 00, Item 7.7.

3.0 I (we) *acknowledge* and *agree* to the following:

3.1 To use and accept the **Contractor Provided Unit Prices** on the **Bid Proposal Form**, Section 00 41 00, Item 7.7, as provided by the Contractor in evaluating either additions to or deductions from the Work.

3.2 To use and accept the **Unit Prices** in Section 01 20 00 "Contract Considerations" Division 1 as provided by the Owner in evaluating either additions to or deductions from the Work.

3.3 To use and accept the **Allowances** in Section 01 20 00 "Contract Considerations" Division 1, as part of the Total Contract Sum as listed in Section 7.3 of this Bid Proposal form.

3.4 To use and accept the **Supplemental Bids** in Section 01 23 13, Division 1, as provided by the Contractor, when authorized by the Owner as scheduled in Section 7.6 of this Bid proposal form.

3.5 To complete and submit a **Contractor/Consultant Certification** along with a **Resolution/Certificate of Authority** for contracts with a value of $50,000 or more when requested in the **Letter of Intent**.

DPW Website location http://www.ct.gov/dpw/cwp/view.asp?a=1983&q=289926

This certification must be *updated* **annually** by the *successful* bidder. **Annually**, on *or* within two (2) weeks of the **anniversary** date of the execution of this contract, the Contractor shall submit a completed **Annual Certification** with authorizing resolution to DPW, 165 Capitol Ave., Room G-35, Hartford, CT 06106. For the purposes of this paragraph, the **execution date** of the contract will be the date the Commissioner of DPW signs the contract.

3.6 To hold the bid price for ninety (90) calendar days and any extensions caused by the Contractor's delays in required submissions. The Contractor and the State may mutually agree to extend this period. The agreement to extend the 90-day period may occur after the expiration of the original 90-day period.

The apparent low bidder is required to submit key supporting documents as noted under the caption **Bid Submittal Time Line** at the end of this Section 00 41 00, within ten (10) calendar days of the bid opening, and to submit their Affirmative Action Plan to CHRO within fifteen (15) calendar days of bid opening. If there are any delays in the receipt of these materials then the Bid shall remain valid for the same additional number of days. For example, if the materials are submitted four (4) days later; then the bid shall remain valid for ninety-four (94) days.

3.7 With regard to a State contract as defined in **P.A. 07-01** having a value in a calendar year of $50,000 or more or a combination or series of such **agreements** or **contracts** having a value of $100,000 or more, the **authorized signatory** to this **submission** in response to the State's solicitation expressly **acknowledges receipt** of the **State Election Enforcement Commission's notice** advising prospective state

contractors of the state campaign contribution and solicitation prohibitions, and will inform its principals of the contents of the **notice**. See Attachment **SEEC Form 10 and 11**.

3.8 To comply with the Department of Correction's **Security Regulations For Contract Forces**, Section 00 73 63.

4.0 This Bid Proposal Form is submitted to and in compliance with the foregoing and following conditions and/or information:

4.1 AWARD

4.1.1 All proposals shall be subject to provisions of **Article 1 of the Notice to Bidders** and for purpose of award, consideration shall be given only to Bid Proposals submitted by qualified and responsible bidders.

4.1.2 The award shall be made on the **lowest Lump Sum Bid** as stated in Section 7.3 of this Bid Proposal Form and any or all **Supplemental Bids** as stated in Section 7.6 of this **Bid Proposal Form**, taken sequentially, as applicable, provided funds are available.

4.1.3 In the event of any **discrepancy** between the amount written in words and the amount written in numerical figures, the amount written in words shall be controlling.

4.2 COMMENCEMENT AND ACCEPTANCE (ARTICLE 4 GENERAL CONDITIONS)

4.2.1 The General Contractor shall commence Work within **fourteen** (14) **calendar days** *after* receiving "Construction Start Date and Notice To Proceed" by the Commissioner or the authorized representative and continue for One thousand one hundred twenty five **(1,125)** calendar days for completion of the project.

4.3 LIQUIDATED DAMAGES: (ARTICLE 8, GENERAL CONDITIONS)

4.3.1 The General Contractor shall be assessed **$4,432.00** per day for each calendar day *beyond* the Date established for Substantial Completion of the Contract according to the **Contract Time** as defined in Article 1.28 of the General Conditions, and not otherwise excused or waived pursuant to the Contract Documents, as defined in Article 1.23 of the General Conditions.

4.3.2 The General Contractor shall be assessed **$3,430.00** per day for each calendar day *beyond* ninety (90) days *after* the date of said Substantial Completion that the Contractor fails to achieve **Acceptance**, as defined in Article 1.1 of the General Conditions and not otherwise excused or waived as described above.

4.4 CONTRACTOR'S INSURANCE REQUIRED: (ARTICLE 35, GENERAL CONDITIONS)

4.4.1 The **limits of liability** for the Insurance required for this project shall be those listed in Article 35 of the General Conditions.

4.4.2 SPECIAL HAZARDS INSURANCE REQUIRED:

None Required

4.4.3 BUILDERS RISK INSURANCE

The General Contractor shall maintain Builder's Risk insurance providing coverage for the entire Work at the project site, and shall also cover portions of the Work located away from the site but intended for use at the site, and shall also cover portions of the Work in transit. Coverage shall be written on an All-Risk, Replacement Cost, and completed Value Form basis in an amount at least equal to the projected completed value of the Work and the policy shall state that it is for the benefit of and payable to the state of Connecticut.

4.5 **NOT USED**

4.6 The General Contractor on this project shall be required to award not less than **25%** of the total Contract Sum to contractors who are certified and eligible to participate under The State of Connecticut Set-Aside Program for **small** contractors, including **6.25%** to certified and eligible **Minority Business Enterprises**, in accordance with Connecticut General Statutes Section 4a-60g.

4.6.1 This requirement *must be met even if* the **General Contractor** is *certified* and *eligible* to participate in the **Small Business Set-Aside Program**. To facilitate compliance with this requirement for set-aside subcontractors, the three (3) **apparent low bidders** will have ten (10) calendar days from the date of bid opening within which to submit a **list of certified set-aside contractors** to be used on this project along with the **dollar amounts** to be paid to each, on the form provided, and a copy of their **current certification** must be attached. This information will be considered as part of your Bid Proposal Form and **failure** to comply with any portion of this requirement within the ten (10) days, including but not limited to **failure** to list or meet the necessary dollar amount or percentage of the bid price will be cause to **reject** your bid.

4.7 BIDDER'S QUALIFICATION STATEMENT AND OBJECTIVE CRITERIA FOR EVALUATING QUALIFICATIONS OF BIDDERS:

4.7.1 Information in regards to the General Contractor's and the Named Subcontractor's Bidder's Qualification is submitted and is made part of this Bid Proposal Form. **Note: Individual Specification Sections may contain General Contractor and/or Subcontractor Qualification requirements that exceed those in Section 00 45 15, "Objective Criteria Established for Evaluating Qualifications of Bidders."**

4.7.1.1 The **General Contractor** is required to complete the **General Contractor Bidder's Qualification Statement** in section 00 45 14.

4.7.1.2 Any **Named Subcontractor** as listed in schedule 7.5.1 of this Bid Proposal Form is required to complete the **Named Subcontractor Bidder's Qualification Statement** in section 00 45 17. To facilitate compliance with this requirement, the three (3) apparent low bidders will have **ten** (10) calendar days, from the bid opening date, to submit the completed Named Subcontractor Bidder's Qualification Statement as required in section 00 45 17. This information will be considered as part of your Bid Proposal Form and failure to comply with any portion of this requirement will be **cause to reject** your bid.

4.7.2 The **Objective Criteria for Evaluating Bidders** that are included in Division 0, Section 00 45 15, of this Project Manual, is to assure that the State of Connecticut will secure the "lowest responsible and qualified bidder" who has the ability and capacity to successfully complete the Bid Proposal Form and the Work.

4.8 NONDISCRIMINATION AND LABOR RECRUITMENT:

4.8.1 The Contract is subject to the provisions of Executive Order No. Three of Governor Thomas J. Meskill, promulgated June 16, 1971, concerning labor employment practices, Executive Order No. Seventeen of Governor Thomas J. Meskill, promulgated February 15, 1973, concerning the listing of employment openings and Executive Order No. Sixteen of Governor John G. Rowland promulgated August 4, 1999, concerning violence in the workplace, all of which are incorporated into and are made a part of the Contract as if they had been fully set forth in it. At the Contractor's request, the Client Agency shall provide a copy of these orders to the Contractor. The Contract may also be subject to Executive Order No. 7C of Governor M. Jodi Rell, promulgated July 13, 2006, concerning contracting reforms and Executive Order No. 14 of Governor M. Jodi Rell, promulgated April 17, 2006, concerning procurement of cleaning products and services, in accordance with their respective terms and conditions.

4.9 FEDERAL & STATE WAGE DETERMINATIONS:

4.9.1 The U. S. Secretary of Labor's latest decision and the State of Connecticut Wage Schedule are all incorporated in the documents. The higher rate (Federal or State) for any given occupation shall prevail. At the time of bidding, the bidder agrees to accept the current prevailing wage scale, as well as the annual adjustment to the prevailing wage scale, as provided by the Connecticut Department of Labor.

4.10 CERTIFICATION OF BIDDER REGARDING EQUAL EMPLOYMENT OPPORTUNITY & NON-SEGREGATED FACILITIES:

4.10.1 The General Contractor and Subcontractors are hereby advised that upon acceptance of their bids they are obligated to fill out within seven (7) calendar

days the certification required pursuant to Executive Order No. 11246, and agree to certify to the compliance of non-segregated facilities.

4.11 EQUALS AND SUBSTITUTION REQUESTS PROCEDURES:

4.11.1 All submissions requesting "Equals and/or Substitutions" shall be made by the **Contractor** in accordance with **Article 15** of the **General Conditions** and **Section 01 25 00** of the **General Requirements**. All submissions shall contain all the information necessary for the Department of Public Works to evaluate the submission and the request. Failure to submit sufficient information to make a proper evaluation, including submittal of data for the first manufacturer listed as well as the data for the "Equals and/or Substitutions" proposed, shall result in a **rejection** of the submission and request. Upon receipt of the submission and request the Department of Public Works shall notify the Contractor the request has been received and as soon as possible shall render a decision on such submission and request.

4.11.2 **Pre-Bid Opening Substitution of Materials and Equipment:** The Owner will consider requests for equals or substitutions *if* received **fourteen** (14) days *prior* to the **Bid Opening**. The **Equal or Substitute Product Request Form 701** must be used to submit request. This **form** may be found in the **DPW Website**.

4.11.3 Request for Equal or Substitution shall be submitted to the **DPW Project Manager and Architect or Engineer**.

4.11.4 Any substitution request not complying with requirements will be denied. Substitution request sent *after* the **deadline** will be denied.

4.11.5 An **Addendum** shall be issued to inform all prospective bidder of any accepted substitution in accordance with our addenda procedures.

4.11.6 No extension of time will be allowed for the time period required for consideration of any Substitution or Equal.

4.11.7 **Post Contract Award Substitution Of Materials And Equipment:** All Requests For "Equals And Substitutions" *after* the Award of the Contract shall be made *only* by the **General Contractor** in accordance with Article 15, Materials: Standards, Section 00 72 00 General Conditions Of The Contract For Construction.

5.0 ACCOMPANYING THIS PROPOSAL IS:

5.1 A CERTIFIED CHECK drawn to the order of – Treasurer, State of Connecticut, in the which it is understood shall be cashed and the proceeds thereof used so far as may be necessary to reimburse the State of Connecticut for losses and damages arising by virtue of my (our) failure to file the required Bonds and execute the required contract if this proposal is accepted by the Awarding Authority.

OR

5.2 A BID BOND having as surety thereto a Surety Company or Companies authorized to transact business in the State of Connecticut and made out in the penal sum of 10% of the bid.

5.3 GIFT AND CAMPAIGN CONTRIBUTION CERTIFICATE AT TIME OF CONTRACT EXECUTION

5.4 A DEPARTMENT OF ADMINISTRATIVE SERVICES (DAS) CONTRACTOR PRE-QUALIFICATION CERTIFICATE

The DAS Prequalification Certificate is required for projects estimated to exceed $500,000.00 (C.G.S. 4b-91 as amended)

5.5 A DEPARTMENT OF ADMINISTRATIVE SERVICES (DAS) UPDATE STATEMENT

The DAS Update Statement is required for projects estimated to exceed $500,000.00 (C.G.S. 4b-91 as amended)

5.6 CHECKLIST OF INCLUDED ITEMS WITH BID PROPOSAL AT TIME OF BID PROPOSAL SUBMITTAL

	IMPORTANT:	
Item	A. All forms below must be included when you submit your bid package. B. Failure to submit any of items marked below with an **asterisk** (*) shall cause rejection of the bid and shall not be considered a minor irregularity under CGS 4b-95.	**Section**
1 *	**Bid Proposal Form***	00 41 00
2 *	Appropriate Resolution or **Certificate** (of authority*)	00 40 14
3 *	**Ethics Affidavit (Regarding State Ethics)** (New July 1, 2005)*	00 40 14
4 *	Department of Administrative Services **Pre-qualification Certificate***	00 40 15
5 *	Department of Administrative Services **Update Statement** *	00 40 15
6 *	**Standard Bid Bond** or Certified Check*	00 43 16
7	**General Contractor Bidder's Qualification Statement**	00 45 14

6.0 I (we), the undersigned, hereby declare that I am (we are) the only person(s) interested in the Bid Proposal and that it is made without any connection with any other person making any Bid Proposal for the same work. No person acting for, or employed by, the State of Connecticut is directly or indirectly interested in this Bid Proposal, or in any Contract which may be made under it, or in expected profits to arise therefrom. This Bid Proposal is made without directly or indirectly influencing or attempting to influence any other person or corporation to bid or refrain from bidding or to influence the amount of the Bid Proposal of any other person or corporation. This Bid Proposal is made in good faith without collusion or connection with any other person bidding for the same work and this proposal is made with distinct reference and relation to the plans and specifications prepared for this Contract. I (we) further declare that in regard to the

conditions affecting the Work to be done and the labor and materials needed, this Bid Proposal is based solely on my (our) own investigation and research and not in reliance upon any representations of any employee, officer or agent of the State.

7.0 Each **class of Work** set forth in a separate section of the specifications pursuant to this Section shall be a **subtrade** designated in Schedule 7.5.1 of this Bid Proposal Form and shall be the matter of a **subcontract** made in accordance with the procedure set forth in this chapter.

7.1 The undersigned proposes to furnish all labor and materials required for

Project Number: BI-RT-843
Project Title: Additions and Renovations
HC Wilcox Regional Vocational Technical School
298 Oregon Road
Meriden, Connecticut

in accordance with the accompanying Plans and Specifications

Prepared by: Tia Soo Kim Partners, LLC
146 Wyllys Street, Suite 1-203
Hartford, CT 06106
Engineer/Architect

for the Contract Sum specified in Section 7.3 subject to **additions** and **deductions** according to the terms of the specifications.

7.2 This Bid Proposal includes _____ number of **Addenda/Addendum.**

7.2.1 The **Contractor is to fill in item 7.2 above**, acknowledging the number of Addenda that the Contractor is including in the Bid Proposal Form. Failure to acknowledge all **addenda** in the space provided in the Bid Proposal Form shall be cause for **rejection** of the bid.

7.3 **THE PROPOSED CONTRACT PRICE IS AS FOLLOWS:**

$ [ ][ ] , [ ][ ][ ] , [ ][ ][ ] . [ ][ ]

(Place figures in appropriate boxes.)

_____ DOLLARS

(Written Amount)

7.3.1 In Accordance With Section 4.6 Not Less Than **25%** Of This Total Must be Awarded to Certified **Set-Aside** Contractors, including **6.25% Minority Business Enterprises**. **Failure** to Meet This Requirement Will Be Cause To **Reject** Your Bid.

7.4. **NOT USED**

7.5 **Subcontractors and their price must be listed for the trades identified in Schedule 7.5.1.**

FAILURE TO PROPERLY COMPLETE THIS SECTION ACCORDING TO THE BELOW INSTRUCTIONS SHALL RESULT IN REJECTION OF THE BID.

SCHEDULE 7.5.1 – NAMED SUBCONTRACTORS

Description	Name of Subcontractor	Amount Dollars	Labor & Material Payment Bond	Performance Bond	State of CT D.C.P. License/ Registration No. Format: Prefix - No. - Suffix
1. Electrical	_____	$ _____	_____	% _____	% _____
2. Plumbing	_____	$ _____	_____	% _____	% _____
3. HVAC** **HVAC (includes all controls)	_____	$ _____	_____	% _____	% _____
4. Masonry	_____	$ _____	_____	% _____	% _____
6. Sprinkler	_____	$ _____	_____	% _____	% _____

On and after October 1, 2007, no person whose **subcontract** *exceeds* five hundred thousand dollars in value may perform work as a **subcontractor** on a project estimated to cost more than five hundred thousand dollars, unless the person is **prequalified** in accordance with section 4a-100, as amended by **Public Act 06-134**.

7.5.2 List the *name* and *price* of each **Named Subcontractor** that will perform the **work** of the trades listed in Schedule 7.5.1.

7.5.3 The **General Contractor** *may* list **itself** together with its **price (failure to provide both will be cause for rejection),** *if* it customarily performs any of the trades specified. *If* the General Contractor leaves the spaces for a specific "Trade Description" *completely blank*, it will be *assumed* that the General Contractor will perform that Work.

7.5.4 *If* the General Contractor requires a **Performance** and/or **Labor and Material Payment Bond**, *then* the General Contractor must indicate in Schedule 7.5.1

which of the Named Subcontractors are subject to this requirement. The amount (%) shall not exceed the Named Subcontractor's price listed in Schedule 7.5.1.

7.5.5 The undersigned *agrees* that each of the **Named Subcontractors** listed in Schedule 7.5.1 of the Bid Proposal Form will be used for the **Work** indicated at the **amount stated**, *unless* a **substitution** is permitted by the awarding authority as provided for in section 00 21 19 Notice to Bidders.

7.6 Any **Supplemental Bids** listed in schedule 7.6.1, *if* accepted by the Owner, will be taken cumulatively and in numerical order as scheduled. No Supplemental Bid will be skipped or taken out of numerical order as scheduled. Supplemental Bids: Division 1, Section 01 23 13 of the **General Requirements** identify and describe the Supplemental Bids as shown in Schedule 7.6.1.

SCHEDULE 7.6.1 – SUPPLEMENTAL BIDS	
Supplemental Bid No.: 1	Provide all labor, material and equipment to complete the Work in accordance with Division 1, Section 01 23 13. ADD: _____ Dollars $ _____ . (Written Amount)
Supplemental Bid No.: 2	Provide all labor, material and equipment to complete the Work in accordance with Division 1, Section 01 23 13. ADD: _____ Dollars $ _____ . (Written Amount)
Supplemental Bid No.: 3	Provide all labor, material and equipment to complete the Work in accordance with Division 1, Section 01 23 13. ADD: _____ Dollars $ _____ . (Written Amount)
Supplemental Bid No.: 4	Provide all labor, material and equipment to complete the Work in accordance with Division 1, Section 01 23 13. ADD: _____ Dollars $ _____ . (Written Amount)
Supplemental Bid No.: 5	Provide all labor, material and equipment to complete the Work in accordance with Division 1, Section 01 23 13. ADD: _____ Dollars $ _____ . (Written Amount)
Supplemental Bid No.: 6	Provide all labor, material and equipment to complete the Work in accordance with Division 1, Section 01 23 13. ADD: _____ Dollars $ _____ . (Written Amount)
Supplemental Bid No.: 7	Provide all labor, material and equipment to complete the Work in accordance with

	Division 1, Section 01 23 13. ADD: _____ Dollars $ _____ . (Written Amount)
Supplemental Bid No.: 8	Provide all labor, material and equipment to complete the Work in accordance with Division 1, Section 01 23 13. ADD: _____ Dollars $ _____ . (Written Amount)
Supplemental Bid No.: 9	Provide all labor, material and equipment to complete the Work in accordance with Division 1, Section 01 23 13. ADD: _____ Dollars $ _____ . (Written Amount)

7.7 **Contractor Provided Unit Prices** are not needed for this project.

7.8 The **undersigned** agrees that *if* selected as the General Contractor, I (we) shall, within **seven** (7) calendar days (legal State holidays excluded) *after* notification thereof by the awarding authority, *execute* a **Contract** in accordance with the terms of this Bid Proposal Form and Contract.

7.9 The undersigned agrees and warrants that they have made **good faith efforts** to employ **minority business enterprises** as **Subcontractors** and **suppliers** of materials under such Contract and shall provide the Commission on Human Rights and Opportunities with such information as is requested by the Commission concerning their **employment practices and procedures** as they relate to the current provisions of the Connecticut General Statutes governing Contract requirements.

7.10 This project is a "Threshold Building" and subject to all Statutory provisions as stated in Amendment No. 2 of the specifications Section 00 92 00 article 2.1.

8.0 CONFIDENTIALITY OF DOCUMENTS

8.01 The **undersigned** agrees that if not selected as the General Contractor for this project, all plans and specifications in their possession for the project shall be destroyed.

8.02 The **undersigned** agrees that if selected as the General Contractor for this project:

8.02.1 The **plans and specifications** shall not be disseminated to anyone except for construction of this project.

8.02.2 The following **provision** shall be included in all of its contracts with subcontractors and sub-consultants:

> Any and all drawings, specifications, maps, reports, records or other documents associated with the contract shall only be utilized to the extent necessary for the performance of the work and duties under this contract. Said drawings,

specifications, maps, reports, records and other documents may not be released to any other entity or person except for the sole purpose of the work described in this contract. No other disclosure shall be permitted without the prior written consent of the Department of Public Works. When any such drawings, specifications, maps, reports, records or other documents are no longer needed, they shall be destroyed."

8.02.3 Upon completion of the construction and the issuance of a certificate of occupancy, the plans and specifications shall be returned to the Department of Public Works, or destroyed, or retained in a secure location and not released to anyone without first obtaining the permission of the Department of Public Works.

9.0 A duly authorized representative of the Bidder or Bidder's partnership, firm, corporation or business organization must sign all Bid Proposals Forms.

(NO FACSIMILE SIGNATURE IS PERMITTED).
ALL INFORMATION BELOW IS TO BE FILLED IN BY THE BIDDER.

Project Number BI-RT-843

Firm Name _____
Complete BIDDER'S LEGAL COMPANY NAME

General Contractor's State of Connecticut, D.C.P. License/ Registration No. _____
(Applicable for Threshold Building projects only. Insert "N/A" if notapplicable. Refer to Item 7.10)

Firm Federal Employer Identification Number _____

Firm CT Tax Registration Number _____

Firm Address _____
Street City State Zip Code

Telephone Number _____

FAX Number _____

E-mail Address _____

Type of Business (check one):

____Corporation

____Limited Liability Corporation (**LLC**)

____Partnership

____Sole Proprietor

____Doing Business As (d/b/a), if yes, provide complete name **below:**

_____

_____

_____

Corporate Seal, *if* a Corporation

Provide Exact Wording on Corporate Seal **below**:

_____

_____

_____

This Bid Submission is **only** for Contractors who are **Certified** in the **DAS Prequalification Classification** noted in the **Invitation to Bid.**

A *Resolution/Certificate of Authority* must be submitted with your Bid Proposal.

Signed this _____ **day of** _____ **20** _____

Bidder's Signature _____ _____
Duly Authorized Title

_____ _____
Print Name Date

The apparent three low bidders are required to submit key supporting documents as noted on the following page within ten (10) calendar days of the bid opening, while the apparent low bidder is required to submit his Affirmative Action Plan to CHRO within fifteen (15) calendar days of bid opening. If there are any delays in the receipt of these materials then the Bids shall remain valid for the same additional number of days. For example, since, the apparent three low bidders are required to hold the bid price for ninety (90) calendar days and any extensions caused by the Contractor's delays in required submissions, if materials are submitted four (4) days later; then the bid shall remain valid for ninety-four (94) days.

Failure to meet the below stated deadlines may result in rejection of the bid at

the sole discretion of the Commissioner of Public Works.

Bid Submittal Time Line

SUBMITTALS **DUE** WITHIN 10 CALENDAR DAYS **AFTER** BID OPENING (From the Apparent **Three** Low Bidders):

1. Section 00 73 27 DPW Set-Aside Schedule:
2. Listing of certified set aside contractors Subs with name, address, amount and whether a subcontractor or a supplier or both
3. DAS Set-Aside Subcontractor Certificate of Eligibility (SBE's & MBE's)
4. Section 00 45 17 Named Subcontractor Bidder's Qualification Statements
5. Named Subcontractor's DAS Prequalification Certificate, when applicable

SUBMITTALS **DUE** WITHIN 15 CALENDAR DAYS **AFTER** BID OPENING (From the **Apparent Low Bidder**):

1. Affirmative Action Plan to CHRO
2. Affirmative Action Plan Transmittal Letter Copy to DPW Procurement
3. Section 00 73 53 Affidavit for Certified Subcontractors as MBE's
4. Section 00 73 44 Wage Certification to DOL
5. On your letterhead, list of all named subcontractors, address and contact person
6. Scope Review conducted

SUBMITTALS **DUE** WITHIN 10 BUSINESS DAYS **AFTER** BOND COMMISSION FUNDING APPROVAL VIA EXPRESS/OVERNIGHT MAIL (From The **Apparent Low** Bidder):

1. Section 00 52 73 Subcontractor Agreements (Named & Listed)

SUBMITTALS **DUE** WITHIN 10 BUSINESS DAYS **AFTER** THE LETTER OF INTENT

1. Section 00 62 16 Insurance Certificate Form
2. Section 00 92 10 Performance Bond
3. Section 00 92 10 Labor & Material Bond
4. Section 00 92 10 Surety Sheet
5. Power of Attorney from the Surety Company
6. Section 00 40 14 Certificate of Authority/Resolution - Certificate
7. Asbestos Abatement Liability Insurance (for asbestos abatement only)
8. Motor Vehicle Pollution Liability for Asbestos Abatement (for asbestos abatement only)
9. Section 00 92 10 Non-Residents Certificate - DRS - Guarantee Bond (form AU-766)
10. Section 00 92 10 Bidder's Certificate: Financial Position & Corporate Structure

11. Section 00 52 03 Contract
12. Section 00 40 14 Affidavit Regarding State Ethics – for each Named Subcontractor
13. Section 00 40 14 Gift And Campaign Contribution Certification
14. Section 00 40 14 Consulting Agreement Affidavit
15. Certificate of Legal Existence from Corporations

END OF SECTION

APPENDIX #4

State of Connecticut

CONTRACTOR CERTIFICATION FORM FOR PCB ABATEMENT

Department of Public Works

DPW PROJECT INFORMATION:

DPW Project No.: BI-RT-843

Project Title: Additions and Renovations, H.C. Wilcox Regional Vocational Technical School, Meriden, CT

GENERAL CONTRACTOR CONDITIONS:

The State of Connecticut Department of Public Works ("DPW") has provided notification to the United States Environmental Protection Agency ("EPA") that it will be abating PCBs in caulk, window glazing, and associated building materials in conjunction with the renovation of H.C. Wilcox Technical High School in Meriden, Connecticut. The Notification consists of the *H.C. Wilcox PCB Self-Implementing Cleanup Plan* dated June 2010, and three emails (July 15, 2010 - email of curtain wall; July 20, 2010 - email response to comments; and July 21, 2010 - email response to comments).

The EPA provided an Approval with conditions to this notice - *H.C. Wilcox Technical High School PCB Cleanup and Disposal Approval* dated July 29, 2010.

Per Condition 11.a. of Attachment 1 of the Approval, the General Contractor ("GC") is required to provide certification stating that he has read and understands the Notification, and agrees to abide by the conditions specified in the Approval. If the GC fails to sign this certification or fails to operate in compliance with the Notification and Approval, DPW shall consider the GC to be in default of this Contract and the State shall seek appropriate remedies as defined in the Contract.

GENERAL CONTRACTOR INFORMATION:

Name and Address of General Contractor Responsible for Implementing EPA Approval Conditions:

Name of Firm: _____

Contact Person: _____ Telephone: _____

Address: _____

Town: _____ State: _____ Zip: _____

GENERAL CONTRACTOR CERTIFICATION:

I hereby certify that I have read and understand the Notification, and agree to abide by the Conditions specified in the Approval.

_____

Signature of Duly Authorized Individual Date

Print/Type Name: _____

Title: _____, Duly Authorized

Name of Firm: _____

UNITED STATES ENVIRONMENTAL PROTECTION AGENCY
REGION I
5 POST OFFICE SQUARE, SUITE 100
BOSTON, MA 02109-3912

CERTIFIED MAIL - RETURN RECEIPT REQUESTED

JUL 29 2010

Joseph V. Cassidy, P.E.
Director of Technical Services
Department of Public Works
165 Capitol Avenue, Room 275
Hartford, Connecticut 06106

Re: H.C. Wilcox Technical High School PCB Cleanup and Disposal Approval under 40 CFR §§ 761.61(a) and (c), and § 761.79(h)

Dear Mr. Cassidy:

This is in response to the Connecticut Department of Public Works (CT DPW) Notification[1] for approval of a proposed PCB cleanup project for the H.C. Wilcox Technical High School located at 298 Oregon Road, Meriden, Connecticut (the Site). The Site contains PCB caulk and PCB window glazing that exceeds the allowable PCB levels under the federal PCB regulations at 40 CFR § 761.20(a) and § 761.62.

The Site is part of the Connecticut Technical High School System, which is owned by the Department of Education. However, CT DPW will have oversight of and responsibility for the PCB cleanup work proposed in the Notification. In the Notification, CT DPW has proposed the following PCB cleanup and disposal plan:

- Remove PCB caulk, PCB glazing, and associated windows and doors;
- Remove PCB-contaminated *porous surfaces* with greater than or equal to (≥) 1 part per million (ppm) PCBs,
- Remove PCB-contaminated soil with ≥ 1 ppm PCBs;
- Collect verification samples to confirm that the PCB cleanup standards have been met;

[1] Information was prepared by TRC Environmental Corporation on behalf of CT DPW, CT DOE, and CT Technical High School System to satisfy the requirements under 40 CFR §§ 761.61(a) and (c) and 761.79(h). Information was submitted dated June 2010 (SIP); July 15, 2010 (e-mail of curtain wall); and July 20, 2010 (e-mail response to comments); and, July 21, 2010 (e-mail response to comments) and shall be referred to as the "Notification."

- Dispose of all PCB caulk, window glazing and associated building substrates as a greater than or equal to (≥) 50 ppm PCB waste at a TSCA-approved landfill or a RCRA hazardous waste landfill; and,

- Dispose of PCB-contaminated soil with less than (<) 50 ppm at a RCRA Subtitle D landfill in accordance with § 761.61(a)(5)(i)(B)(*2*)*(ii)*.

With respect to the caulk and window glazing which have PCB concentrations at < 50 ppm, CT DPW has determined that these products meet the definition of an *Excluded PCB Product* as defined at 40 CFR § 761.3. As such, cleanup and disposal of these products are not addressed in this Approval. While these products are not addressed under this Approval in its Notification, CT DPW has indicated that these products will be removed per the requirements of the Connecticut Department of Environmental Protection (CT DEP). Removal of these products is detailed in Appendix A of the June 2010 submittal.

With the exception of the verification sampling frequency, the information provided meets the notification requirements under § 761.61(a) for *PCB remediation waste* and the disposal requirements for PCB caulk and PCB window glazing (i.e. *PCB bulk product waste*) under § 761.62. CT DPW has proposed an alternative verification sampling frequency for decontaminated *porous surfaces* in accordance with § 761.61(c).

CT DPW may proceed with its cleanup in accordance with 40 CFR §§ 761.61(a) and (c); § 761.62; § 761.79(h); its Notification; and this Approval, subject to the conditions of Attachment 1.

Please be aware that under this Approval EPA is requiring additional sampling and/or abatement measures for the C2 caulk, the DC1 caulk, and the IC4 caulk than proposed in the Notification. Specifically, EPA is requiring a higher verification sampling frequency for sample locations associated with the C2 caulk and the DC1 caulk than was proposed in the Notification. No data was provided to support the alternative sampling for the C2 caulk and the DC1 caulk. For the IC4 caulk location (10-foot interior expansion joint on the B Wing), EPA is requiring additional verification sampling or a 12-inch cut-back from the caulk joint. The 12-inch cut-back is proposed for the IE1 and IE2 interior expansion joints (see Attachment 1, Condition 13).

Please note Attachment 1, Condition 10 of this Approval. Within 30 days of receipt of this Approval, CT DPW shall be required to submit its schedule for implementation and completion of the work authorized under this Approval and detailed in the Notification, including abatement of the caulk and window glazing with PCB concentrations at < 50 ppm.

This Approval does not release CT DPW or CT DOE from any applicable requirements of federal, state or local law, including the requirements related to cleanup and disposal of PCBs or other contaminants under the CT DEP regulations.

EPA is aware of ongoing outreach efforts to teachers, parents, students and staff. A meeting to discuss the PCB status at the school was held earlier this year. EPA requests documentation of any additional outreach planned prior to the initiation of this PCB cleanup work.

Questions and correspondence on this Approval should be directed to:

Kimberly N. Tisa, PCB Coordinator (OSRR07-2)
United States Environmental Protection Agency
5 Post Office Square, Suite 100
Boston, Massachusetts 02109-3912
Telephone: (617) 918-1527
Facsimile: (617) 918-0527

EPA shall not consider this project complete until it has received all submittals required under this Approval. Please be aware that upon EPA receipt and review of the submittals, EPA may request any additional information necessary to establish that the work has been completed in accordance with 40 CFR Part 761, the Notification, and this Approval.

Sincerely,

James T. Owens, III Director
Office of Site Remediation & Restoration

cc: J. Bolton, CT DPW
J. Woodmansee, CT DOE
Principal R. Cavallaro, Wilcox
G. Trombly, CT DEP
B. Toal, CT DPH
M. Beeler, TRC

Attachment 1

ATTACHMENT 1

PCB CLEANUP AND DISPOSAL APPROVAL CONDITIONS
H.C. WILCOX TECHNICAL HIGH SCHOOL ("the Site")
298 OREGON ROAD, MERIDEN, CONNECTICUT

GENERAL CONDITIONS

1. This Approval is granted under the authority of Section 6(e) of the Toxic Substances Control Act (TSCA), 15 U.S.C. § 2605(e), and the PCB regulations at 40 CFR Part 761, and applies solely to the *PCB bulk product waste* and the *PCB remediation waste* located at the Site and identified in the Notification.

2. The Connecticut Department of Public Works (CT DPW) shall conduct on-site activities in accordance with the conditions of this Approval and with the Notification.

3. In the event that the cleanup plan described in the Notification differs from the conditions specified in this Approval, the conditions of this Approval shall govern.

4. The terms and abbreviations used herein shall have the meanings as defined in 40 CFR § 761.3 unless otherwise defined within this Approval.

5. CT DPW must comply with all applicable federal, state and local regulations in the storage, handling, and disposal of all PCB wastes, including PCBs, PCB Items and decontamination wastes generated under this Approval. In the event of a new spill during response actions, CT DPW shall contact EPA within 24 hours for direction on PCB cleanup and sampling requirements.

6. CT DPW is responsible for the actions of all officers, employees, agents, contractors, subcontractors, and others who are involved in activities conducted under this Approval. If at any time CT DPW has or receives information indicating that CT DPW or any other person has failed, or may have failed, to comply with any provision of this Approval, it must report the information to EPA in writing within 24 hours of having or receiving the information.

7. This Approval does not constitute a determination by EPA that the transporters or disposal facilities selected by CT DPW are authorized to conduct the activities set forth in the Notification. CT DPW is responsible for ensuring that its selected transporters and disposal facilities are authorized to conduct these activities in accordance with all applicable federal, state and local statutes and regulations.

8. This Approval does not: 1) waive or compromise EPA's enforcement and regulatory authority; 2) release CT DPW from compliance with any applicable requirements of federal, state or local law; or 3) release CT DPW from liability for, or otherwise resolve, any violations of federal, state or local law.

NOTIFICATION AND CERTIFICATION CONDITIONS

9. This Approval may be revoked if the EPA does not receive written notification from CT DPW of its acceptance of the conditions of this Approval within 10 business days of receipt.

10. Within 30 days of receipt of this Approval, CT DPW shall submit a schedule for implementation and completion of the activities authorized under the Approval and detailed in the Notification. The schedule also should include the abatement of the PCB caulk and window glazing with PCB concentrations at less than (<) 50 parts per million (ppm) that will be undertaken per the Connecticut Department of Environmental Protection (CTDEP) requirements.

11. Prior to initiating onsite work under this Approval, CT DPW shall submit the following information for EPA review and/or approval:

    a. a certification signed by its selected contractor, stating that the contractor(s) has read and understands the Notification, and agrees to abide by the conditions specified in this Approval;

    b. A contractor work plan, prepared and submitted by the selected contractor(s), detailing the procedures that will be employed for removal of PCB-contaminated materials, for containment design, and for encapsulation of certain *porous surfaces*. This work plan should also include information on waste storage, handling, and disposal for each waste stream type and for equipment decontamination; and,

    c. a certification signed by the selected analytical laboratory, stating that the laboratory has read and understands the extraction and analytical methods and quality assurance requirements specified in the Notification and in this Approval.

REMEDIAL AND DISPOSAL CONDITIONS

12. To the maximum extent practical, engineering controls, such as barriers, and removal techniques, such as the use of HEPA ventilated tools, shall be utilized during removal processes. In addition, to the maximum extent possible, disposable equipment and materials, including PPE, will be used to reduce the amount of decontamination necessary.

13. PCB-contaminated materials shall be decontaminated and verification sampling and analysis shall be conducted as described below:

    a. All visible residues of PCB caulk and PCB glazing (including associated windows and doors) with greater than or equal to (≥) 50 parts per million shall be removed and disposed of as described in the Notification.

    b. The decontamination standard for building *porous surfaces* (e.g. concrete, brick, etc) shall be less than or equal to (≤) 1 ppm.

        i) All post-decontamination verification sampling of *porous surfaces* shall be performed on a bulk basis (i.e. mg/Kg). Samples shall be collected according to EPA's *draft* Standard Operating Procedure For Sampling Concrete in the Field, dated 12/30/97 to a maximum depth of 0.5 inches.

            (1) The verification sampling frequency for decontaminated *porous surfaces* shall comply with Table 4 of the July 21, 2010 submittal with the exception of the C2 caulk, the DC1 caulk, and the IC4 caulk verification sample locations.

                (a) The verification sampling frequency for decontaminated *porous surfaces* in contact with C2 caulk shall be 1 sample per every 10 linear feet on either side of the joint;

                (b) A minimum of four (4) verification samples shall be collected from the DC1 caulk locations.

                (c) At the IC4 location, CT DPW shall remove a minimum of 12-inches of building *porous surfaces* in contact with PCB caulk. In the alternative, CT DPW shall collect a minimum of three (3) verification samples from the *porous surfaces* to confirm that the PCB cleanup standard of ≤ 1 ppm has been met.

                (c) Verification samples shall be collected at locations not previously sampled during the prior characterization work.

            (2) Chemical extraction for PCBs shall be conducted using Methods 3500B/3540C of SW-846; and, chemical analysis for PCBs shall be conducted using Method 8082 of SW-846, unless another extraction or analytical method(s) is validated according to Subpart Q.

ii) In the event **any** verification sample is greater than (>) 1 ppm, the CT DPW shall contact EPA within 72 hours to determine what modifications, if any, need to be made to the sampling frequency or to the abatement plan for the remainder of the project.

iii) For decontaminated *porous surfaces* that have PCB concentrations exceeding the decontamination standard, the CT DPW may conduct additional decontamination to achieve the required decontamination standard or must store and dispose of these materials as TSCA-regulated waste in accordance with 40 CFR Part 761.

c. Post abatement surface wipe samples shall be collected within containment areas to verify what, if any, additional cleanup is required within the PCB work area. The PCB surface wipe standard for these areas shall be shall be $< 10\ \mu g/100\ cm^2$ for areas being demolished or $< 1\ \mu g/100\ cm^2$ for materials to remain in place.

i) Sampling shall be performed on a surface area basis by the standard wipe test as specified in 40 CFR § 761.123 (i.e. $\mu g/100\ cm^2$). At a minimum, the verification sampling frequency shall comply with Table 4 of the July 21, 2010 submittal.

ii) Chemical extraction for PCBs shall be conducted using Method 3500B/3540C of SW-846 and chemical analysis for PCBs shall be conducted using Method 8082 of SW-846, unless another method(s) is validated according to Subpart Q.

iii) For surfaces within containment that have PCB concentrations exceeding the established cleanup standard, CT DPW may conduct additional cleaning of these surfaces or must store and dispose of these materials as TSCA-regulated waste in accordance with 40 CFR Part 761.

d. The decontamination standard for soils shall be ≤ 1 ppm.

i) *Bulk PCB remediation waste* samples (i.e. soils) shall be collected on a bulk basis (i.e. mg/Kg) and PCB analytical results shall be reported on a dry weight analysis. The verification sampling frequency shall comply with Subpart O.

iii) Chemical extraction for PCBs shall be conducted using Method 3500B/3540C of SW-846 and chemical analysis for PCBs shall be conducted using Method 8082 of SW-846, unless another method(s) is validated according to Subpart Q.

14. All PCB waste (regardless of concentration) generated as a result of the activities described in the Notification, excluding any decontaminated materials, shall be marked in accordance with § 761.40; stored in a manner prescribed in § 761.65; and, disposed of in accordance with 40 CFR § 761.61(a)(5) or § 761.62, unless otherwise provided below:

    a. Decontamination wastes and residues shall be disposed of in accordance with 40 CFR § 761.79(g)(6).

    b. Moveable equipment, tools, and sampling equipment shall be decontaminated in accordance with either 40 CFR § 761.79(b)(3)(i)(A), § 761.79(b)(3)(ii)(A), or § 761.79(c)(2).

    c. PCB-contaminated water generated during decontamination or dewatering shall be decontaminated in accordance with 40 CFR § 761.79(b)(1) or disposed of under § 761.60.

INSPECTION, MODIFICATION AND REVOCATION CONDITIONS

15. CT DPW and/or CT DOE shall allow any authorized representative of the Administrator of the EPA to inspect the Site and to inspect records and take samples as may be necessary to determine compliance with the PCB regulations and this Approval. Any refusal by CT DPW or CT DOE to allow such an inspection (as authorized by Section 11 of TSCA) shall be grounds for revocation of this Approval.

16. Any proposed modification(s) in the plan, specifications, or information in the Notification must be submitted to EPA no less than 14 calendar days prior to the proposed implementation of the change. Such proposed modifications will be subject to the procedures of 40 CFR § 761.61(a)(3)(ii).

17. Any departure from the conditions of this Approval without prior, written authorization from the EPA may result in the revocation, suspension and/or modification of the Approval, in addition to any other legal or equitable relief or remedy the EPA may choose to pursue.

18. Any misrepresentation or omission of any material fact in the Notification or in any future records or reports may result in the EPA's revocation, suspension and/or modification of the Approval, in addition to any other legal or equitable relief or remedy the EPA may choose to pursue.

19. Approval for these activities may be revoked, modified or otherwise altered: if EPA finds a violation of the conditions of this Approval or of 40 CFR Part 761, including EPA's PCB Spill Cleanup Policy, or other applicable rules and regulations; or, if EPA finds that these activities present an unreasonable risk to public health or the environment.

RECORDKEEPING AND REPORTING CONDITIONS

20. CT DPW and/or CT DOE shall prepare and maintain all records and documents required by 40 CFR Part 761, including but not limited to the records required under Subparts J and K. A written record of the cleanup and disposal activities and the analytical sampling shall be established and maintained by CT DPW and/or CT DOE in one centralized location, until such time as EPA approves in writing a request for an alternative disposition of such records. All records shall be made available for inspection to authorized representatives of EPA.

21. CT DPW shall submit a Final Completion Report (Report) to the EPA within 120 days of completion of the activities described under this Approval and shall submit same to CT DOE. At a minimum, this Report shall include: a discussion of the project activities; characterization and confirmation sampling analytical results; copies of the accompanying analytical chains of custody; field and laboratory quality control/quality assurance checks; an estimate of the quantity of PCBs removed and disposed off-site; copies of manifests and/or bills of lading; and, copies of certificates of disposal or similar certifications issued by the disposer, if applicable.

22. Required submittals shall be mailed to:

    Kimberly N. Tisa, PCB Coordinator (OSRR07-2)
    United States Environmental Protection Agency
    5 Post Office Square, Suite 100
    Boston, Massachusetts 02109-3912
    Telephone: (617) 918-1527
    Facsimile: (617) 918-0527

23. No record, report or communication required under this Approval shall qualify as a self-audit or voluntary disclosure under EPA audit, self-disclosure or penalty policies.

****

END OF ATTACHMENT 1

From: Beeler, Malcolm (Windsor,CT-US)
Sent: Thursday, July 15, 2010 10:24 AM
To: 'Tisa.Kimberly@epamail.epa.gov'
Subject: Pic

Picture of the curtain wall. The windows penetrate through but the caulks, especially C2, are only in contact with the gray material seen.

Malcolm A. Beeler
Project Engineer
TRC
ENERGY STAR AWARD 2008
PARTNER OF THE YEAR
21 Griffin Road North
Windsor, CT 06095-1512

Main: 860-298-9692
Fax: 860-298-6399
Direct: 860-298-6223
Cell: 860-395-8785
Email: mbeeler@trcsolutions.com

2010/05/17 17:00

Cutler, Rebecca

From: Bolton, Jeffrey

Sent: Tuesday, July 20, 2010 2:13 PM

To: Tisa.Kimberly@epamail.epa.gov

Cc: Saliby, Lori; Trombly, Gary; Woodmansee, John; Richmond, Al; Cosgrove, Barbara; Cassidy, Joseph; Cutler, Rebecca; Bolton, Jeffrey; Toal, Brian

Subject: Wilcox SIP Response to Comments

Follow Up Flag: Follow up

Flag Status: Green

Attachments: Wilcox SIP Response to Comments 7-20-10.pdf

Please see the attached.

Please feel free to call with any questions.

Thanks,
Jeff

Jeffrey S. Bolton, Supervising Environmental Analyst
CONNECTICUT DEPARTMENT OF PUBLIC WORKS
Technical Services - Environmental Planning & GIS Services
165 Capitol Avenue, Room 275, Hartford, Connecticut 06106
p: (860) 713-5706 cell: (860) 335-5658
email: jeffrey.bolton@ct.gov web: http://www.ct.gov/dpw

STATE OF CONNECTICUT

DEPARTMENT OF PUBLIC WORKS

Raeanne V. Curtis
Commissioner

VIA E-MAIL

July 20, 2010

Kimberly N. Tisa
Region 1 PCB Administrator
United States Environmental Protection Agency
1 Congress Street, Suite 1100-CPT
Boston, MA 02114-2023

RESPONSE TO COMMENTS TO SELF-IMPLEMENTING CLEANUP PLAN FOR H.C. WILCOX TECHNICAL HIGH SCHOOL, 298 OREGON ROAD, MERIDEN, CT

Dear Ms. Tisa:

The Department of Public Works ("DPW") has received your comments dated, July 18, 2010 and based on our phone conversation yesterday; the following are responses to those comments:

Comment 1: The note on Figure A1 states "Planned renovations will not address the following caulks with PCB concentrations >1 mg/kg by <50 mg/kg (locations shown on the figure)." It is felt that this note is inconsistent with what was in the text and should be changed to reflect the intent of the SIP as stated in Appendix A1 as well. Specifically, it should state that the caulk will be removed.

> *Response:* The note on Figure A1 accurately states the work to be done. The SIP describes how the materials are to be removed as part of the overall project; therefore, both DPW and the Department of Environmental Protection believe no change is required to the note as stated.

Comment 2: Clarification as to the procedures and materials to be used in encapsulating substrates is requested.

> *Response*: Specifications being prepared for the performance of the work will include details as to the material to be used and how it will be applied. These specifications will be submitted to the US Environmental Protection Agency ("EPA") when completed.

Comment 3: The approval letter from EPA will include a standard approval condition requiring a Contractor's Work Plan to be submitted prior to starting work. This submittal

will need to cover: 1) general containment construction procedures, 2) building material removal methods, 3) proposed storage areas for wastes, and 4) protective measures for students, faculty and staff.

Response: Specifications being prepared for the performance of the work described in the SIP will include provisions that cover the concerns raised by EPA. This will be submitted to EPA when completed.

Comment 4: A monitoring workplan for outside containments will be required from the Contractor.

Response: Monitoring will be performed by a separate contractor to be hired by the state. This monitor, described as the PCB Engineer/Project Monitor in the specifications, will perform the monitoring as described on page 20 of the SIP. Based on our conversation, the documentation on page 20 is seen as sufficient and such a workplan is not necessary.

Comment 5: Clarification regarding the intent of Section 2.3.4 is indicated. Specifically, to allow for clean materials to be removed prior to the removal of PCB contaminated materials, verification sampling should be performed first as part of the "physical delineation". After this was done, the contractor could remove materials as clean up to the line that had been predetermined and then they could remove the rest as PCB-contaminated.

Response: Should this situation occur, verification sampling would occur prior to performing such demolition activities adjacent to the PCB areas. This will be incorporated into the specifications.

Comment 6: Concrete and the front entrance and outside of the "nurse's office" has not been sampled and there are high concentration PCB caulks present in these areas. How will these materials be handled?

Response: Concrete in these areas will be removed as part of the project. The subject concrete will be handled as outlined in the SIP. Specifically, concrete in contact with caulk will be removed as specified in the SIP and sampled to verify PCB concentrations < 1 mg/kg.

Comments 7: PCB >50 ppm were identified, IC4 (71,000 mg/kg) and DC2 (57,000 mg/kg), but not included in Table 4. Given that these caulks are in contact with porous substrates (the non-porous surfaces are to be disposed), they should be included in the verification sampling indicated in Table 4.

Response: This was an omission in the SIP. A corrected Table 4 is attached.

Thank you for the comments and we appreciate your efforts. If you have any questions, please contact me at 860-713-5706 or via email at jeffrey.bolton@ct.gov.

Sincerely,

JEFF BOLTON
Supervising Environmental Analyst
Connecticut Department of Public Works

cc: L. Saliby, DEP
G. Trombly, DEP
B. Toal, DPH
J. Woodmansee, DOE
A. Richmond, DOE
B. Cosgrove, DPW
J. Cassidy, DPW
B. Cutler, DPW

Attachment

Table 4
Quantification of Materials to be Abated and Verification Sample Estimate
H.C. Wilcox Technical High School
Meriden, Connecticut

Removal Location	Comments	Caulk	Glazing	Verification Samples
		A-Wing		
Front Entry	Removal of caulk and glazing around three entry doors and windows above	C2 – Approximately 30 linear feet of caulk around perimeter of doors and windows in contact with building materials DC1 – Approximately 10 linear feet of caulk around door	G1 – Approximately 60 linear feet of glazing around perimeter of windows in contact with window frame	One for porous materials in contact with C2 One for porous materials in contact with DC1 Two wipe samples within containment
Northwest Curtain Wall	Removal of 240 linear feet of curtain wall	C2 – Approximately 720 linear feet of caulk in contact with curtain wall only	G1 and IG1 – Approximately 2,400 linear feet of glazing around perimeter of windows in contact with window frame only	None – it is anticipated that the entire curtain wall in which C2 is in contact will be removed and disposed
Northeast Curtain Wall	Removal of 180 linear feet of curtain wall	C2 – Approximately 540 linear feet of caulk in contact with curtain wall only	G1 and IG1 – Approximately 1,700 linear feet of glazing around perimeter of windows in contact with window frame only	None – it is anticipated that the entire curtain wall in which C2 is in contact will be removed and disposed
External Expansion Joints	Removal of caulk from three vertical expansion joints at curtain walls	C2 – Approximately 75 linear feet of caulk in contact with curtain wall and other building materials	None	Four for porous materials in contact with C2 on either side of the expansion joint Three wipe samples from within three containments
		B-Wing		
Interior Doors	Removal of caulk from five doors	IDC3 – Approximately 150 linear feet of caulk in contact with door frame and other building materials	None	Three for porous materials in contact with IDC3 Five wipe samples from within five containments
Interior Expansion Joints	Removal of caulk from thirteen interior vertical expansion joints	IE1 – Approximately 120 linear feet of caulk in eight separate joints in contact with building materials IE2 – Approximately 65 linear feet of caulk in five separate joints in contact with building materials IC4 – Approximately 10 linear feet of caulk from the base of the exterior window, Plumbing Theory room to the ceiling	None	Six for porous materials in contact with IE1 on either side of the joint Four for porous materials in contact with IE2 on either side of the joint One for porous materials in contact with IC4 Thirteen wipe samples from within thirteen containments
Windows	Removal of 255 linear feet of windows along the north and east side of building	None	G1 and IG1 – Approximately 1,000 linear feet of glazing around perimeter of windows in contact with window frame only	No porous material sampling Five wipe samples from within five containments

Table 4
Quantification of Materials to be Abated and Verification Sample Estimate
H.C. Wilcox Technical High School
Meriden, Connecticut

Removal Location	Comments	Caulk	Glazing	Verification Samples
		B-Wing (continued)		
Windows	Removal of 110 linear feet of windows along the north, south, and the northwest and southwest corners of building	C7 – Approximately 150 linear feet of caulk in contact with window frame and building materials	G1 and IG1 – Approximately 425 linear feet of glazing around perimeter of windows in contact with window frame only	Three for porous materials in contact with C7 Three wipe samples from within three containments
		C-Wing		
Windows	Removal of 235 linear feet of windows along the north and south sides of building	None	IG1 – Approximately 2,300 linear feet of glazing around perimeter of windows in contact with window frame only	No porous material sampling. 26 wipe samples from within 13 to 26 containments
Entry Doors	Removal of caulk from five doors	DC1 – Approximately 70 linear feet of caulk in contact with door frame and other building materials DC2 – Approximately 115 linear feet of caulk in contact with door frame and other building materials	None	Two for porous materials in contact with DC1 Three for porous materials in contact with DC2 Five wipe samples from within five containments
Exterior Expansion Joints	Removal of caulk from ten exterior vertical expansion joints on south side of building	C7 – Approximately 250 linear feet of caulk in contact with concrete and window frames	None	Ten for porous materials in contact with C7 (number may be reduced following window removal and field-determined reduction of porous materials in contact with C7 Ten wipe samples from within ten containments
		Boiler Room		
Window	Removal of 10 linear feet of windows on the east side of the boiler room	None	G1 and IG1 – Approximately 35 linear feet of glazing around perimeter of windows in contact with window frame only	None One wipe sample from within one containment

Notes: All removals of PCB Bulk Product Wastes in contact with building materials discussed assume removal of six inches of the building materials in contact with the PCB Waste except for IE1 and IE2 in B-Wing where 12 inches of the building materials will be removed.
It is assumed that the entire curtain wall will be removed from the northeast and northwest sides of the A-Wing.
For glazings, it is assumed that the window and the window frame will be removed and there will be no porous building materials remaining that were in contact with the glazing. Thus, no verification sampling will be performed.
For door caulks, it is assumed that the door frame will be removed with the caulk and that the only remaining porous building materials formerly in contact with the caulk will be those surrounding the outside of the door frame.

Cutler, Rebecca

From: Bolton, Jeffrey

Sent: Wednesday, July 21, 2010 3:07 PM

To: Tisa.Kimberly@epamail.epa.gov

Cc: Saliby, Lori; Trombly, Gary; Woodmansee, John; Richmond, Al; Cosgrove, Barbara; Cassidy, Joseph; Cutler, Rebecca; Toal, Brian; Bolton, Jeffrey

Subject: Wilcox SIP Response to Comments 7-21-10

Follow Up Flag: Follow up

Flag Status: Green

Attachments: Wilcox SIP Response to Comments 7-21-10.pdf

Please see the attached.

Please feel free to call with any questions.

Thanks,
Jeff

Jeffrey S. Bolton, Supervising Environmental Analyst
CONNECTICUT DEPARTMENT OF PUBLIC WORKS
Technical Services - Environmental Planning & GIS Services
165 Capitol Avenue, Room 275, Hartford, Connecticut 06106
p: (860) 713-5706 cell: (860) 335-5658
email: jeffrey.bolton@ct.gov web: http://www.ct.gov/dpw

STATE OF CONNECTICUT

DEPARTMENT OF PUBLIC WORKS

Raeanne V. Curtis
Commissioner

VIA E-MAIL

July 21, 2010

Kim Tisa
United States Environmental Protection Agency
1 Congress Street, Suite 1100-CPT
Boston, Massachusetts 02114-2023

RESPONSE TO COMMENTS TO SELF-IMPLEMENTING CLEANUP PLAN FOR H.C. WILCOX TECHNICAL HIGH SCHOOL, 298 OREGON ROAD, MERIDEN, CT

Dear Mrs. Tisa:

The Department of Public Works ("DPW") has received your comments dated, July 18, 2010 and based on our phone conversation Monday; the following are responses to those comments:

Comment 1: The note on Figure A1 states "Planned renovations will not address the following caulks with PCB concentrations >1 mg/kg by <50 mg/kg (locations shown on the figure)." It is felt that this note is inconsistent with what was in the text and should be changed to reflect the intent of the SIP as stated in Appendix A1 as well. Specifically, it should state that the caulk will be removed.

Response: See attached revised Figure A1.

Comment 2: Clarification as to the procedures and materials to be used in encapsulating substrates is requested.

Response: Specifications being prepared for the performance of the work will include details as to the material to be used and how it will be applied. These specifications will be submitted to the US Environmental Protection Agency ("EPA") when completed.

Comment 3: The approval letter from EPA will include a standard approval condition requiring a Contractor's Work Plan to be submitted prior to starting work. This submittal will need to cover: 1) general containment construction procedures, 2) building material removal methods, 3) proposed storage areas for wastes, and 4) protective measures for students, faculty and staff.

Response: Specifications being prepared for the performance of the work described in the SIP will include provisions that cover the concerns raised by EPA. This will be submitted to EPA when completed.

Comment 4: A monitoring workplan for outside containments will be required from the Contractor.

Response: Monitoring will be performed by a separate contractor to be hired by the state. This monitor, described as the PCB Engineer/Project Monitor in the specifications, will perform the monitoring as described on page 20 of the SIP. Based on our conversation, the documentation on page 20 is seen as sufficient and such a workplan is not necessary.

Comment 5: Clarification regarding the intent of Section 2.3.4 is indicated. Specifically, to allow for clean materials to be removed prior to the removal of PCB contaminated materials, verification sampling should be performed first as part of the "physical delineation". After this was done, the contractor could remove materials as clean up to the line that had been predetermined and then they could remove the rest as PCB-contaminated.

Response: Should this situation occur, verification sampling would occur prior to performing such demolition activities adjacent to the PCB areas. This will be incorporated into the specifications.

Comment 6: Concrete and the front entrance and outside of the "nurse's office" has not been sampled and there are high concentration PCB caulks present in these areas. How will these materials be handled?

Response: Concrete in these areas will be removed as part of the project. The subject concrete will be handled as outlined in the SIP. Specifically, concrete in contact with caulk will be removed as specified in the SIP and sampled to verify PCB concentrations < 1 mg/kg.

Comments 7: PCB >50 ppm were identified, IC4 (71,000 mg/kg) and DC2 (57,000 mg/kg), but not included in Table 4. Given that these caulks are in contact with porous substrates (the non-porous surfaces are to be disposed), they should be included in the verification sampling indicated in Table 4.

Response: This was an omission in the SIP. A corrected Table 4 is attached.

Thank you for the comments and we appreciate your efforts. If you have any questions, please contact me at 860-713-5706 or via email at jeffrey.bolton@ct.gov.

Sincerely,

JEFF BOLTON
Supervising Environmental Analyst
Connecticut Department of Public Works

cc: L. Saliby, DEP, G. Trombly, DEP, B. Toal, DPH
J. Woodmansee, DOE, A. Richmond, DOE
B. Cosgrove, DPW, J. Cassidy, DPW, B. Cutler, DPW

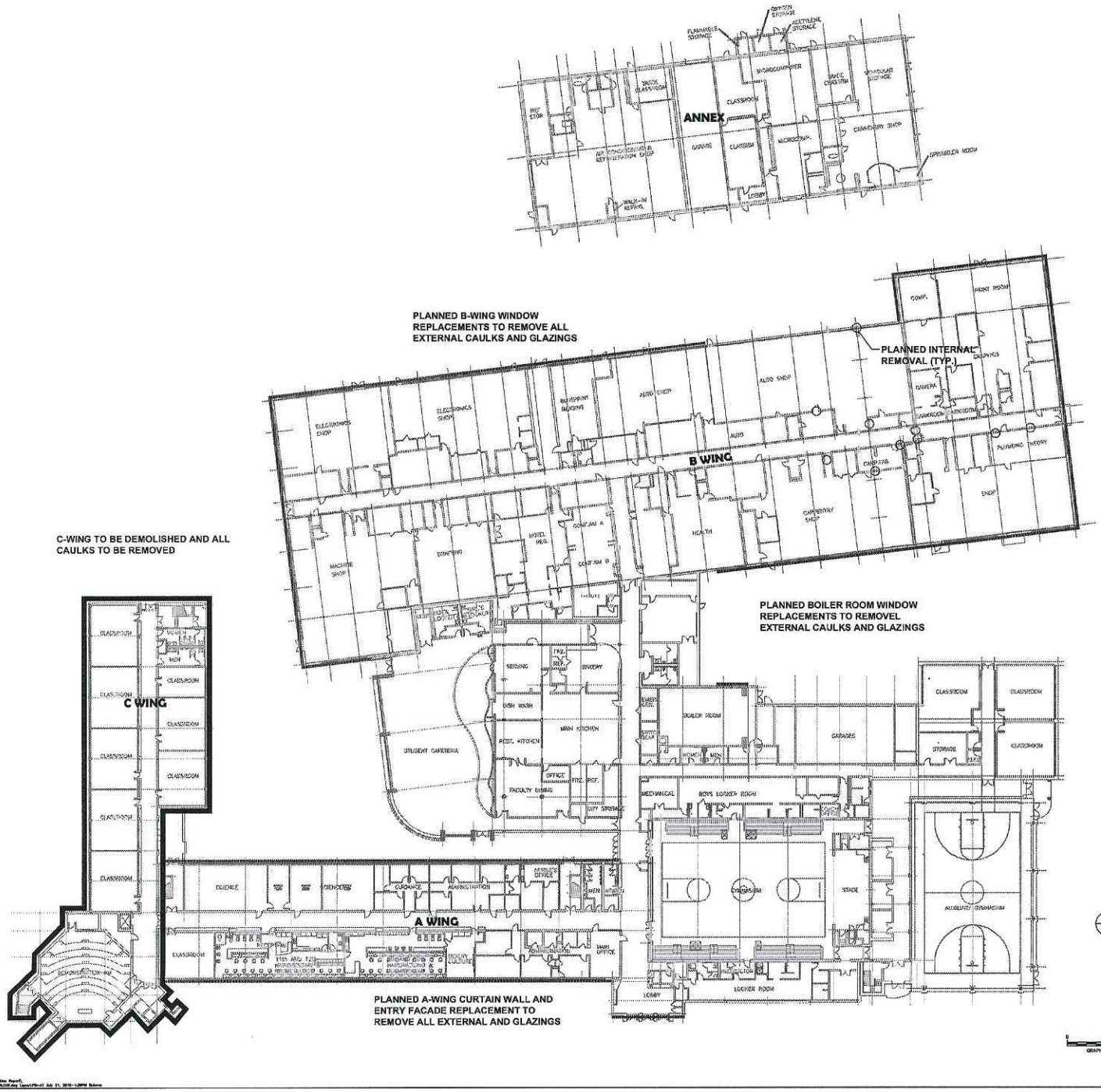

FIRST FLOOR PLAN
SCALE : 1" = 20'

DRAWING TITLE: FIRST FLOOR PLAN	STATE OF CONNECTICUT DEPARTMENT OF PUBLIC WORKS	
REVISIONS	DRAWING PREPARED BY: TRC 21 Griffin Road North Windsor, CT 06095	DATE: 07-21-10
MARK / DATE / DESCRIPTION		SCALE: 1"=20'
	PROJECT: FIGURE A1 SITE PLAN WITH NON-FEDERALLY REGULATED BUILDING MATERIAL LOCATIONS H.C. WILCOX TECHNICAL HIGH MERIDEN, CONNECTICUT	DRAWN BY: REA
		APPROVED BY: EP
	PROJECT NO: BI-RT-843	DRAWING NO.: FIG-A1

Table 4
Quantification of Materials to be Abated and Verification Sample Estimate
H.C. Wilcox Technical High School
Meriden, Connecticut

Removal Location	Comments	Caulk	Glazing	Verification Samples
		A-Wing		
Front Entry	Removal of caulk and glazing around three entry doors and windows above	C2 – Approximately 30 linear feet of caulk around perimeter of doors and windows in contact with building materials DC1 – Approximately 10 linear feet of caulk around door	G1 – Approximately 60 linear feet of glazing around perimeter of windows in contact with window frame	One for porous materials in contact with C2 One for porous materials in contact with DC1 Two wipe samples within containment
Northwest Curtain Wall	Removal of 240 linear feet of curtain wall	C2 – Approximately 720 linear feet of caulk in contact with curtain wall only	G1 and IG1 – Approximately 2,400 linear feet of glazing around perimeter of windows in contact with window frame only	None – it is anticipated that the entire curtain wall in which C2 is in contact will be removed and disposed
Northeast Curtain Wall	Removal of 180 linear feet of curtain wall	C2 – Approximately 540 linear feet of caulk in contact with curtain wall only	G1 and IG1 – Approximately 1,700 linear feet of glazing around perimeter of windows in contact with window frame only	None – it is anticipated that the entire curtain wall in which C2 is in contact will be removed and disposed
External Expansion Joints	Removal of caulk from three vertical expansion joints at curtain walls	C2 – Approximately 75 linear feet of caulk in contact with curtain wall and other building materials	None	Four for porous materials in contact with C2 on either side of the expansion joint Three wipe samples from within three containments
		B-Wing		
Interior Doors	Removal of caulk from five doors	IDC3 – Approximately 150 linear feet of caulk in contact with door frame and other building materials	None	Three for porous materials in contact with IDC3 Five wipe samples from within five containments
Interior Expansion Joints	Removal of caulk from thirteen interior vertical expansion joints	IE1 – Approximately 120 linear feet of caulk in eight separate joints in contact with building materials IE2 – Approximately 65 linear feet of caulk in five separate joints in contact with building materials IC4 – Approximately 10 linear feet of caulk from the base of the exterior window, Plumbing Theory room to the ceiling	None	Six for porous materials in contact with IE1 on either side of the joint Four for porous materials in contact with IE2 on either side of the joint One for porous materials in contact with IC4 Thirteen wipe samples from within thirteen containments
Windows	Removal of 255 linear feet of windows along the north and east side of building	None	G1 and IG1 – Approximately 1,000 linear feet of glazing around perimeter of windows in contact with window frame only	No porous material sampling Five wipe samples from within five containments

Table 4
Quantification of Materials to be Abated and Verification Sample Estimate
H.C. Wilcox Technical High School
Meriden, Connecticut

Removal Location	Comments	Caulk	Glazing	Verification Samples
		B-Wing (continued)		
Windows	Removal of 110 linear feet of windows along the north, south, and the northwest and southwest corners of building	C7 – Approximately 150 linear feet of caulk in contact with window frame and building materials	G1 and IG1 – Approximately 425 linear feet of glazing around perimeter of windows in contact with window frame only	Three for porous materials in contact with C7 Three wipe samples from within three containments
		C-Wing		
Windows	Removal of 235 linear feet of windows along the north and south sides of building	None	IG1 – Approximately 2,300 linear feet of glazing around perimeter of windows in contact with window frame only	No porous material sampling. 26 wipe samples from within 13 to 26 containments
Entry Doors	Removal of caulk from five doors	DC1 – Approximately 70 linear feet of caulk in contact with door frame and other building materials DC2 – Approximately 115 linear feet of caulk in contact with door frame and other building materials	None	Two for porous materials in contact with DC1 Three for porous materials in contact with DC2 Five wipe samples from within five containments
Exterior Expansion Joints	Removal of caulk from ten exterior vertical expansion joints on south side of building	C7 – Approximately 250 linear feet of caulk in contact with concrete and window frames	None	Ten for porous materials in contact with C7 (number may be reduced following window removal and field-determined reduction of porous materials in contact with C7 Ten wipe samples from within ten containments
		Boiler Room		
Window	Removal of 10 linear feet of windows on the east side of the boiler room	None	G1 and IG1 – Approximately 35 linear feet of glazing around perimeter of windows in contact with window frame only	None One wipe sample from within one containment

Notes: All removals of PCB Bulk Product Wastes in contact with building materials discussed assume removal of six inches of the building materials in contact with the PCB Waste except for IE1 and IE2 in B-Wing where 12 inches of the building materials will be removed.
It is assumed that the entire curtain wall will be removed from the northeast and northwest sides of the A-Wing.
For glazings, it is assumed that the window and the window frame will be removed and there will be no porous building materials remaining that were in contact with the glazing. Thus, no verification sampling will be performed.
For door caulks, it is assumed that the door frame will be removed with the caulk and that the only remaining porous building materials formerly in contact with the caulk will be those surrounding the outside of the door frame.

PART 1 GENERAL

1.1 APPLICABLE PUBLICATIONS

The publications listed below form a part of this specification to the extent referenced. The publications are referred to in the text by the basic designation only.

UNITED STATES ARMY CORPS OF ENGINEERS (COE)
EM-385-1-1 Safety and Health Requirements Manual

ENVIRONMENTAL PROTECTION AGENCY (EPA)
EPA SW-846 Test Methods for Evaluating Solid Waste, Current Edition.

CODE OF FEDERAL REGULATIONS (CFR)
40 CFR Part 761 Polychlorinated Biphenyls Manufacturing, Processing, Distribution in Commerce, and Use Prohibitions

REGULATION OF CONNECTICUT STATE AGENCIES
Sections 22a-133k-1 through 22a-133k-3, inclusive, Remediation Standard

"Self-Implementing Cleanup Plan, H.C. Wilcox Technical High School," prepared by TRC Environmental Corporation, June 2010 (located in Appendix 3). ("PCB Site Remedial Plan").

"Contractor Certification Form for PCB Abatement" (located in Appendix 4).

U.S. Environmental Protection Agency, "H.C. Wilcox Technical High School PCB Cleanup and Disposal Approval", July 29, 2010 (located in Appendix 4).

Section 028215, Abatement of PCB Contaminated Building Materials

1.2 DESCRIPTION

The project site encompasses sections of the H.C. Wilcox Technical High School (Wilcox Tech) located at 298 Oregon Road in Meriden, Connecticut. The site, which is part of the Connecticut Technical High School System, is owned by the Connecticut Department of Education (CT DOE). The Connecticut Department of Public Works (DPW) is conducting site remediation tasks at this facility prior to the performance of various site renovation and demolition activities.

Remedial action at the site includes excavation and off-site disposal of soil adjacent to the buildings with total PCB concentrations ≥1 mg/kg contaminated by PCB containing caulk and/or glazing classified as a PCB Bulk Product Waste.

This section includes requirements for excavating and handling PCB contaminated soil from the proposed surface soil remediation areas as shown on the Contract Drawings and described in the PCB Site Remedial Plan.

1.3 DEFINITIONS

1.3.1 Contaminant Zones

Contaminant zones are those areas of active excavation and the waste storage area.

1.3.2 Excavation

The removal of soil, rock, or hard material to obtain a specified depth or elevation.

1.3.3 PCB Bulk Product Wastes

PCB bulk product waste means waste derived from manufactured products containing PCBs in a non-liquid state, at any concentration where the concentration at the time of designation for disposal was ≥50 ppm PCBs.

1.3.4 PCB Remediation Waste with ≥50 ppm PCBs

PCB remediation waste means waste containing PCBs as a result of a spill, release, or other unauthorized disposal, at concentrations ≥ 50 ppm PCBs, regardless of the concentration of the original spill.

1.3.5 PCB Remediation Waste with <50 ppm PCBs

PCB remediation waste means waste containing PCBs as a result of a spill, release, or other unauthorized disposal which are currently at any concentration if the PCBs are spilled or released from a source not authorized for use under this part.

1.3.6 PCB Site Remedial Plan

"Self-Implementing Cleanup Plan, H.C. Wilcox Technical High School", Prepared by TRC, June 2010 (Appendix 3)

1.3.7 PCB Engineer

To be retained by the Owner, responsible for overseeing excavation work and for performing and evaluating verification sample data.

1.3.8 Owner

The Owner is the Connecticut Department of Public Works and shall be responsible for the Contract and the performance of all the work.

1.3.9 Remedial Action Level

Concentration to which PCB contaminated soil must be removed to verify completion of excavation work.

1.3.10 Soil

The loose surface material of the earth's crust resulting from the chemical and mechanical weathering of rock and organic material.

1.3.11 Suitable Waste Storage Container

A container in which soil is placed for storage prior to transport offsite for disposal that is water tight, lined, and equipped with a cover that prevents the infiltration of rainwater into the container.

1.3.12 Excavated Soil Stockpile

An area where excavated soil is placed following excavation and prior to loading into a waste storage container. At no time will the Contractor create and excavated soil stockpile. All excavated soil is to be placed directly into a suitable waste storage container.

1.3.13 Verification Sampling

Sampling performed to determine the completion of excavation activities as per Subpart O of 40 CFR Part 761.

1.3.14 Waste Storage Area

The secured location in which the Contractor shall store soil prior to offsite transport for disposal. The Contractor shall consult with the Owner and the PCB Engineer to identify the location of Waste Storage Areas prior to generating any wastes. This area shall be secured and signed by the Contractor.

1.3.15 Contractor Certification Form for PCB Abatement

The Contractor shall be required to certify that he has read and understands the PCB Site Remedial Plan, all associated email correspondence between the Department of

Public Works and the United States Environmental Protection Agency (EPA), and the EPA Approval Notice. By signing the Contractor Certification Form for PCB Abatement, the Contractor agrees to abide by the Conditions specified in the EPA Approval Notice. The Contractor Certification Form for PCB Abatement (and associated email correspondence and EPA Approval Notice) is located in Appendix 4.

1.4 SUBMITTALS

Prior to the performance of the work described in this section the Contractor shall submit to the Owner and Construction Administrator the following on the schedule indicated:

1.4.1 The following must be provided to the Owner, Construction Administrator, and the PCB Engineer within seven (7) days after execution of the Contract.

As related to the PCB abatement work, site-specific Health and Safety Plan including the Emergency Response Plan and provisions for decontamination and a contingency plan for unforeseen emergencies. The PCB Engineer shall review such plan only to determine if the plan meets basic regulatory requirements and the minimum requirements of these Specifications. The review will not determine the adequacy of the plan to address all potential hazards, as that remains the sole responsibility of the Contractor.

Contractor Certification Form for PCB Abatement (Appendix 4)

Current certification of employee's OSHA health and safety training (HAZWOPER).

Certification of additional required health and safety training for Supervisors.

Qualifications and experience of the Site Safety Officer (SSO).

1.4.2 Prior to any worker accessing the site to perform the work described in this section, the Contractor shall provide documentation, typed on company letterhead and signed by the Contractor, certifying that all employees assigned to the PCB abatement work listed therein have received the following:

Medical monitoring within the previous twelve (12) months, as required in 29 CFR 1910.120;

Respirator fit testing within the previous twelve (12) months as detailed in 29 CFR 1910.134 (for all employees who must also don a tight-fitting face piece respirator).

1.4.3 Key Personnel

The Contractor shall submit a list of the key personnel of the Contractor and subcontractors (including addresses and telephone numbers) for use in the event of an emergency. As changes occur and additional information becomes available, the Contractor shall correct and change the information contained in previous lists. The Contractor's Representative shall be identified on this list.

1.4.4 Waste Characterization Analytical Data, Waste Profiles, and Disposal Approval

The Contractor shall submit all waste characterization analytical data and waste profiles prior to submittal to any proposed waste disposal facility. The Contractor shall submit all Disposal Approvals a minimum of seven (7) days prior to performing excavation work.

1.4.5 Equipment Decontamination Plan

The Contractor shall submit a decontamination plan for all materials and equipment that shall contact PCB Remediation Wastes and that are to be removed from the site following the completion of work. The decontamination plan shall conform to the requirements of §761.79(c). The Contractor shall submit proof of decontamination to the PCB Engineer as required.

1.5 REGULATORY REQUIREMENTS

All soil is to be handled and stored in accordance with the provision of 40 CFR Part 761 Subpart D. The Contractor shall be responsible for all costs associated with investigation and remediation of any releases due to their failure to handle excavated soil in accordance with the regulatory requirements.

1.6 DELIVERY AND STORAGE

The Contractor shall deliver and store materials in a manner to prevent contamination, segregation, freezing, and other damage.

1.7 MEASUREMENT AND PAYMENT

The Contractor's cost proposal shall be based on the following criteria:

a. Measurement for payment shall be based on mass computation using the tonnage recorded by the waste disposal facility on the completed and signed manifests for each

b. No extra payment shall be made for removal of standing water, fencing, decontamination, run-on/run-off controls, dust control, site preparation, site

restoration or waste disposal areas. The cost for these items shall be included in the base bid.

1.8 PROTECTION

1.8.1 Utility Location

The Contractor shall contact Connecticut's Call Before You Dig for underground utility markouts in accordance with applicable regulations, and provide a confirmation number for DPW's records. The Contractor shall verify the location of all utilities shown on the Contract Drawings or identified during utility mark-outs.

Movement of construction machinery and equipment over pipes and utilities during construction shall be at the Contractor's risk. The Contractor shall perform all work adjacent to utilities as indicated in accordance with procedures outlined by utility company. For work immediately adjacent to or for excavations exposing a utility or other buried obstruction, use hand or light equipment excavation. Start hand or light equipment excavation on each side of the indicated obstruction and continue until the obstruction is uncovered or until clearance for the new grade is assured. Support uncovered lines or other existing work affected by the contract excavation as required. The Contractor shall report damage to utility lines or subsurface construction immediately to the PCB Engineer. The Contractor shall be responsible for the repair of all damaged utilities that were previously shown on Contract Drawings or identified during utility mark-outs.

1.8.2 Overhead Utilities

If excavation or backfilling equipment (excavator arms, lifts, dump truck beds, etc.) at the site can potentially come within a 15 foot radius of the overhead electrical lines, a dedicated spotter must be used for each such piece of equipment. The spotter must be in continuous radio and line of sight communication with the equipment operator and be capable of immediately stopping the equipment operation if any portion of the equipment is in danger of penetrating the 15 foot radius overhead electrical line safety zone. The spotter shall be an experienced and qualified equipment operator.

1.8.3 Structures and Surfaces

The Contractor shall protect adjacent structures and surfaces from traffic, erosion settlement, or any other damage. The Contractor shall repair and reestablish damaged or eroded grades and slopes and restore surface construction prior to acceptance.

PART 2 PRODUCTS - NONE

PART 3 EXECUTION

3.1 SITE PREPARATION

Prior to performing soil excavations, the Contractor shall secure the excavation area with temporary fencing. The Contractor may move temporary fencing sections to allow for work progress while actively working in an excavation area. However, if no work is actively being performed in an excavation area the temporary fencing will be reinstalled.

3.1.1 Excavation Layout

The Contractor shall mark the limits of proposed initial excavations of contaminated soils prior to performing any excavations. The limits of the excavations shall correspond to those shown on the Contract Drawings.

3.1.2 Sedimentation, Erosion and Run-On Controls

The Contractor shall install in accordance with Section 02112, "Erosion and Sediment Control" and the Contract Drawings.

3.1.3 Waste Storage Areas

If the Contractor chooses to store soil onsite prior to transport offsite for disposal, the Contractor shall construct a secured Waste Storage Area at a location agreed to by the Contractor and the PCB Engineer within contract limit lines. The contract limit lines are to be secured as described elsewhere in these specifications and entry shall be limited to Contractor Personnel only. The Waste Storage Area shall enclose all Suitable Waste Storage Containers actively in use with temporary fencing. The fence shall be marked with a Large M_L mark as specified in 40 CFR Part 761 Subpart C.

3.1.4 Waste Storage

The Contractor shall not store waste onsite in a Suitable Waste Container for a period of more than 30 days. The start of the period of waste storage for each container will start on the day in which wastes are first loaded into a container and will terminate when the container is transported offsite.

The Contractor shall store waste onsite in Suitable Waste Containers. No stockpiling shall be allowed and the Contractor shall be responsible for all costs associated with investigation and remediation of any areas contaminated due to the failure of the Contractor to comply with waste storage requirements.

3.1.5 Decontamination

The Contractor shall decontaminate all moveable equipment that contact PCB Remediation Wastes in accordance with the procedures specified in §761.79(c). The Contractor shall not remove any equipment from the Contaminant Zone until it has been properly decontaminated.

Specifically, the Contractor shall employ double wash/rinse procedures as specified in 40 CFR Part 761 Subpart S or swab non-porous surfaces that have contacted PCB wastes with a solvent as specified in §761.79(c)(2)(i). The Contractor shall segregate all liquid waste streams and be responsible for characterizing these wastes for disposal purposes. Solid wastes generated during decontamination shall be stored for disposal with the other PCB wastes generated during remediation activities.

The PCB Engineer shall be responsible for ensuring that decontamination procedures are followed and that wastes are appropriately characterized and disposed of properly.

3.2 SURFACE PREPARATION

3.2.1 Clearing and Grubbing

Clearing is not required for any of the excavation areas as this will be performed by others. Limited grubbing is required in the excavation to be performed on the northwest side of the A-Wing as there are some roots in place within the excavation area.

The soil removed from any root structure that has been grubbed from an excavation area must remain in the excavation or be placed directly into a Suitable Waste Container. Unless suitably decontaminated and tested as clean, all roots grubbed from an area must be considered to be PCB Remediation Wastes.

3.3 EXCAVATION AND HANDLING OF CONTAMINATED SOILS

3.3.1 Contaminant Zone Operations

Construction equipment such as excavators, front end loaders, dozers and hauling vehicles, used within a Contaminant Zone that have contacted PCB Remediation Wastes shall not be permitted to move outside of the area until they have been properly decontaminated.

All soil within the excavations shall be assumed to be PCB Remediation Wastes <50 ppm unless the Contractor is otherwise instructed by the PCB Engineer. All waste handling and storage procedures, equipment decontamination procedures, and other Contaminant Zone Operations shall conform to the requirements of 40 CFR Part 761 Subpart D.

3.3.2 Dust Control

The Contractor shall utilize an adjacent fire hydrant and appropriate hose for dust control. Water shall be applied to keep fugitive dust under control as needed and as directed by the PCB Engineer. Water will be provided by the DPW from an approved fire hydrant or other suitable source at no extra charge to the Contractor.

3.3.3 Excavation

Excavation shall be shallow and performed in lift intervals no greater than one foot unless otherwise approved by the PCB Engineer. Excavation areas shall be clearly marked with stakes and labels.

Excavation equipment shall be smooth edge blade without ripping teeth. Excavation shall be carried out in such a manner so as to minimize the mixing of soils to underlying soils. No ripping, plowing, harrowing or mixing of soils shall be permitted. Only excavation equipment that provides precise depth control will be permitted. No crane mounted clamshell or dragline excavators will be allowed.

Excavation shall be carried out so as to remove contaminated soils from the edge farthest away from the edge where hauling vehicles will approach the Contaminant Zone. Contaminated soils shall not be moved over areas excavated and tested as below action levels and ready for backfilling, unless hauling vehicles move across the clean area to the edge of the Contaminant Zone. Excavation equipment shall not overfill their buckets so as to allow spillage of soil across other contaminated or clean areas. The loose or excess soil shall be removed from the bucket within the active excavation area prior to moving the soil to the hauling vehicles. The Contractor shall be solely responsible for the cost of excavating, handling, storage, testing and disposal of soils that were previously clean and have tested as contaminated due to deficient Contractor operation practices and methods.

3.3.4 Personal Protective Equipment

The Contractor shall assume that all personnel working within a contaminant zone shall be required to be equipped with Personal Protective Equipment (PPE). The Contractor's health and safety officer will be responsible for determining the appropriate level of personal protection. That determination must be evaluated by a certified industrial hygienist and shall be based on actual laboratory data and monitoring from site operations. All personnel shall be required to go through an approved decontamination procedure. All personal protective garments shall be containerized and not reused after removal. The personal protective garments shall be disposed of as contaminated waste in an approved manner.

3.3.5 Remedial Action Levels

The remedial action level for PCB contaminated soil shall be <1.0 mg/kg as specified in the Regulations of Connecticut State Agencies Sections 22a-133k-1 through 22a-133k-3, inclusive, and the High Occupancy Standard without further restrictions in §761.61(a)(4) of 40 CFR Part 761.

3.8 EXCAVATION COMPLETION

Each excavation shall be considered complete after sufficient verification samples have been collected and analyzed and determined to meet remedial action levels. Verification samples shall be collected and analytical data reviewed by the PCB Engineer.

Following the completion of an excavation, the Contractor shall decontaminate their equipment as required and remove from the area. The Contractor may remove temporary security fencing if the excavation is deemed by the PCB Engineer not to be a site hazard.

END OF SECTION

PART 1 GENERAL

1.1 APPLICABLE PUBLICATIONS

The publications/specifications listed below form a part of this specification to the extent referenced. The publications/specifications are referred to in the text by the basic designation only.

Drawings and general provisions of Contract, including General and Supplementary Conditions and Division-1 Specification sections, apply to this work.

"Self-Implementing Cleanup Plan, H.C. Wilcox Technical High School," prepared by TRC Environmental Corporation, June 2010 (located in Appendix 3). ("PCB Site Remedial Plan")

"Contractor Certification Form for PCB Abatement" (located in Appendix 4).

U.S. Environmental Protection Agency, "H.C. Wilcox Technical High School PCB Cleanup and Disposal Approval", July 29, 2010 (located in Appendix 4).

Section 020226, Excavation of PCB Remediation Waste Soils Specifications

U.S. Environmental Protection Agency, 40 CFR Part 761, Polychlorinated Biphenyls Manufacturing, Processing, Distribution in Commerce, and Use Prohibitions

1.2 DESCRIPTION

Work under this item shall include the abatement of: PCB-containing caulk and glazing (Federally-regulated and non-federally regulated PCB) and removal of abutting building materials (concrete, brick, metal door framing, and windows, including window framing, as identified in the Contract Plans and PCB Site Remedial Plan) that are coated with PCB-containing caulk and/or glazing ("PCB Waste").

The work shall be performed by persons who are knowledgeable, qualified, trained and licensed in the removal, treatment, handling, and disposal of PCB contaminated wastes and the subsequent cleaning of the affected environment. Where areas to be abated contain materials with PCBs and asbestos the workers should have all the required asbestos licensing/training as required in Specification Section 28213.

1.2.1 REQUIREMENTS

Federally-regulated PCB-containing caulk and/or glazing (classified as PCB Bulk Product Waste) is defined as any building material manufactured with total PCB concentrations ≥50 mg/kg by weight. All Federally-regulated caulk and glazing shall be removed by the Contractor and all associated building materials in contact with the subject caulk and glazing shall be removed by the Contractor to a depth of at least six

inches (6") unless otherwise indicated by the PCB Engineer that more material requires removal. Building material abutting caulks identified as IE1 and IE2 as shown on the Contract Drawings, shall be removed to a depth of at least twelve (12) inches of building materials on either side of the caulk. Metal door frames abutting the subject caulk shall be removed and disposed of as PCB Bulk Product Waste and the associated doors shall be removed prior to abatement activities and shall not be considered PCB Waste. Windows with the subject PCB-containing glazing and associate metal frames shall be removed and disposed of as PCB Bulk Product Waste.

The Owner shall hire a PCB Engineer for the duration of the PCB abatement work. The PCB Engineer shall provide a Project Monitor to oversee the activities of the Contractor. After removal, verification sampling shall be performed by the Project Monitor. PCB Bulk Product Wastes and abutting building materials shall be considered removed when all verification samples are <1 mg/kg total PCBs.

Non-federally regulated PCB-containing caulk and/or glazing is defined as any building material manufactured with total PCB concentrations ≥1 mg/kg and < 50 mg/kg. All non-federally regulated caulk and glazing shall be removed from the site and disposed of per these Specifications by the Contractor.

In demolition/renovation areas, building materials in contact with the non-federally regulated caulk and glazing shall be removed by the Contractor to a depth of six inches (6") and disposed of by the Contractor as PCB Bulk Product Waste.

Work in non-demolition/renovation areas, shall be scheduled during school vacations, when school is not in session. Such work shall be started and completed within such schedule. Work shall be completed at least ten (10) days prior to students returning to school. Building materials in contact with the non-federally regulated caulk and glazing shall be appropriately cleaned by the Contractor as per these Specifications. Verification samples of the remaining, cleaned building materials shall then be taken by the Project Monitor. If total PCB concentrations in the remaining building materials are ≥1 mg/kg, then an encapsulant, per these Specifications, shall be applied by the Contractor to the area where the caulk and/or glazing were in contact with building materials and new caulk or glazing shall be applied by the Contractor. If total PCB concentrations in the remaining building materials are <1 mg/kg, then the building materials shall be left in place as is.

These Specifications govern all work activities that disturb PCB-containing caulk and glazing and associated building material. All activities shall be performed in accordance with, but not limited to, OSHA Regulation 29 CFR 1926, EPA PCB Regulation 40 CFR Part 761, RCSA 22a-463 through -469 inclusive, and the PCB Site Remedial Plan where applicable.

Abatement work shall include the removal, transportation, and disposal of all PCB Wastes as identified on the Contract Documents, the PCB Site Remedial Plan, and Specifications prior to any phased or planned renovation/demolition work involving

the subject PCB areas. All PCB abatement material to be disposed of, except for soil remediation as covered under separate project Specifications, shall be disposed of by the Contractor as PCB Bulk Product Waste in accordance with 40 CFR Part 761.

Deviations from these Specifications require the written approval from the Owner.

1.3 DEFINITIONS

1.3.1 Contaminant Zones

Contaminant zones are those areas of active abatement and the waste storage area.

1.3.2 Abatement

The removal of PCB contaminated building materials in the manner specified in this section.

1.3.3 Federally-Regulated PCB Bulk Product Wastes

Federally-regulated PCB Bulk Product Waste, as defined in §761.3, means waste derived from manufactured products containing PCBs in a non-liquid state, at any concentration where the concentration at the time of designation for disposal is ≥50 ppm PCBs.

1.3.4 Non-federally Regulated PCB Waste

Non-federally regulated PCB waste means waste derived from manufactured products containing PCBs in a non-liquid state, at any concentration where the concentration at the time of designation for disposal is ≥1 mg/kg and < 50 mg/kg PCBs.

1.3.5 PCB Waste

PCB waste means PCB-containing caulk and glazing (Federally-regulated and non-federally regulated PCB) and abutting building materials to the subject caulk and glazing.

1.3.6 PCB Site Remedial Plan

"Self-Implementing Cleanup Plan, H.C. Wilcox Technical High School", Prepared by TRC, June 2010 (Appendix 3).

1.3.7 Remedial Action Level

Concentration to which PCB contaminated building materials must be removed to verify completion of the abatement work.

1.3.8 PCB Contaminated Building Materials

Consists of those caulks and glazings identified as PCB Bulk Product Wastes and/or non-federally regulated materials. Also may include the building materials in which the caulks and glazings are in contact with which includes, but not limited to, window frames, window glass, brick, concrete, mortar, metal, and stone window sills.

1.3.9 Suitable Waste Storage Container

A container in which PCB wastes are placed for storage prior to transport offsite for disposal that is water tight, lined, and equipped with a cover that prevents the infiltration of rainwater into the container.

1.3.10 Verification Sampling

Sampling performed by the Project Monitor to determine the completion of abatement activities as per the PCB Site Remedial Plan.

1.3.11 Waste Storage Area

The secured location in which the Contractor shall store PCB wastes prior to offsite transport for disposal. The Contractor shall consult with the Owner and the PCB Engineer to identify the location of Waste Storage Areas prior to generating any wastes. This area shall be secured and signed by the Contractor.

1.3.12 PCB Engineer

Responsible for overseeing PCB abatement work and for performing and evaluating verification sample data on behalf of the Owner. The PCB Engineer shall be represented daily onsite by the Project Monitor.

1.3.13 Owner

The Owner is the State of Connecticut, Department of Public Works, as further defined in the General Conditions.

1.3.14 Project Monitor

The onsite representative for the PCB Engineer responsible for overseeing daily work activities. The Project Monitor shall approve all containments prior to performance of abatement work, sampling during and after abatement activities, and for verifying that abatement has been successfully performed and allowing containments to be removed.

1.3.15 Contractor Certification Form for PCB Abatement

The Contractor shall be required to certify that he has read and understands the PCB Site Remedial Plan, all associated email correspondence between the Department of Public Works and the United States Environmental Protection Agency (EPA), and the EPA Approval Notice. By signing the Contractor Certification Form for PCB Abatement, the Contractor agrees to abide by the Conditions specified in the EPA Approval Notice. The Contractor Certification Form for PCB Abatement (and associated email correspondence and EPA Approval Notice) is located in Appendix 4.

1.4 SUBMITTALS

Prior to the performance of the work described in this section the Contractor shall submit to the Owner and Construction Administrator the following on the schedule indicated:

1.4.1 The following must be provided to the Owner, Construction Administrator, and the PCB Engineer within seven (7) days after execution of the Contract.

As related to the PCB abatement work, site-specific Health and Safety Plan including the Emergency Response Plan and provisions for decontamination and a contingency plan for unforeseen emergencies. The PCB Engineer shall review such plan only to determine if the plan meets basic regulatory requirements and the minimum requirements of these Specifications. The review will not determine the adequacy of the plan to address all potential hazards, as that remains the sole responsibility of the Contractor.

Contractor Certification Form for PCB Abatement (Appendix 4)

Current certification of employee's OSHA health and safety training (HAZWOPER).

Certification of additional required health and safety training for Supervisors.

Qualifications and experience of the Site Safety Officer (SSO).

1.4.2 Prior to any worker accessing the site to perform the work described in this section, the Contractor shall provide documentation, typed on company letterhead and signed by the Contractor, certifying that all employees assigned to the PCB abatement work listed therein have received the following:

Medical monitoring within the previous twelve (12) months, as required in 29 CFR 1910.120;

Respirator fit testing within the previous twelve (12) months as detailed in 29 CFR 1910.134 (for all employees who must also don a tight-fitting face piece respirator).

1.4.3 At least seven (7) days prior to performing any abatement work that shall generate PCB wastes, the Contractor shall submit copies of the EPA/State-approved permits for the proposed Chemical Waste landfill and a waste profile approved by the proposed landfill indicating that the waste materials to be generated are acceptable to the facility.

1.4.4 Seven (7) days prior to the start of abatement work, material information for the proposed encapsulant indicating that these materials conform to the specifications contained within.

1.4.5 No abatement shall commence until a copy of all required submittals have been received and found acceptable to the Owner and the PCB Engineer. Those employees added to the Contractor's original list will be allowed to perform work only upon submittal, and receipt of, all the above required paperwork to the Owner and PCB Engineer.

1.4.6 Copies of all permits, licenses, certifications, including but not limited to, manifests and/or bill of lading for the removal, transport, and disposal of PCB waste material shall be submitted to the Owner and PCB Engineer no later than five (5) business days after the Contractor receives such documents.

1.4.7 Notice shall be provided to the Owner and the PCB Engineer at least five (5) business days prior to the start of work under this Specification. Such notice shall include an estimated completion date. If this work is phased over the duration of the project, then such notification requirements shall apply to each phase.

1.5 REGULATORY REQUIREMENTS

1.5.1 All abatement and decontamination wastes are to be handled and stored in accordance with the provision of 40 CFR Part 761 Subpart D. The Contractor shall be responsible for all costs associated with investigation and remediation of any releases due to their failure to handle abatement wastes in accordance with the regulatory requirements.

1.6 DELIVERY AND STORAGE

1.6.1 The Contractor shall deliver and store materials in a manner to prevent contamination, segregation, freezing, and other damage.

1.7 MEASUREMENT AND PAYMENT

The Contractor's cost proposal shall be based on the following criteria:

Measurement for payment shall be based on a lump sum price for the removal of all PCB Wastes.

No extra payment shall be made for the construction and removal of containments, any required barrier installation and removal, decontamination, dust control, site

preparation, site restoration or waste disposal areas. The cost for these items shall be included in the base bid.

Contractor shall use add deduct prices provided for determining cost for additional work if required. If additional areas requiring work is found outside of an area that would already require containment, the Contractor shall use the lump sum price of the containment plus the unit prices abatement work required. If there is a reduction in the work or the requirements of the work as described in the Contract Documents, the deduct price shall be calculated using the lump sum and unit prices provided.

1.8 PROTECTION

1.8.1 Structures and Surfaces

The Contractor shall protect adjacent structures and surfaces from traffic or any other damage. The Contractor shall repair and reestablish damaged building materials that are to remain in place prior to acceptance of the work.

PART 2 PRODUCTS

2.1 All materials shall be delivered to the job site in the original packages, containers, or bundles bearing the name of the manufacturer, the brand name and product technical description.

2.2 No damaged or deteriorating materials shall be used. If material becomes contaminated with PCBs, the material shall be disposed of as PCB waste material. The cost to dispose of this material shall be at the expense of the Contractor.

2.3 Fire retardant polyethylene sheet shall be in roll size to minimize the frequency of joints, with factory label indicating four (4) or six (6) mil thickness.

2.4 Tape (or equivalent) capable of sealing joints in adjacent polyethylene sheets and for the attachment of polyethylene sheets to finished or unfinished surfaces must be capable of adhering under both dry and wet conditions.

2.5 Containers for storage, transportation and disposal of PCB-containing waste material shall be impermeable and both air and watertight.

2.6 Labels and warning signs shall conform to OSHA 29 CFR 1926, USEPA 40 CFR Part 761, and USDOT 49 CFR Part 172 as appropriate.

2.7 Any planking, bracing, shoring, barricades and/or temporary sheet piling, necessary to appropriately perform work activities shall conform to all applicable federal, state and local regulations.

2.8 Air filtration devices and vacuum units shall be equipped with HEPA filters.

PART 3 EXECUTION

3.1 General Requirements for PCB Containing Building Material Abatement.

All labor, materials, tools, equipment, services, testing, insurance, and incidentals which are necessary or required to perform the work in accordance with applicable governmental regulations, industry standards and codes, and these Specifications shall be provided by the Contractor. The Contractor shall be prepared to work all shifts and weekends throughout the course of this work.

Prior to beginning work per these Specifications, the PCB Engineer and Contractor shall perform a visual survey of each work area and review conditions at the site for safety reasons. In addition, the Contractor shall instruct all workers in all aspects of personnel protection, work procedures, emergency evacuation procedures and use of equipment including procedures unique to this work.

3.2 Prior to the performance of any abatement work, the Contractor shall perform the following tasks.

Shutdown and isolate heating, cooling, and ventilating air systems to prevent contamination to the other areas of the buildings.

Shut down and lock out electrical power, including all receptacles and light fixtures, when feasible. The use or isolation of electrical power will be coordinated with all other ongoing uses of electrical power at the site.

Coordinate all power and fire alarm isolation with the appropriate representatives.

When necessary, provide temporary power and adequate lighting and ensure safe installation of electrical equipment, including ground fault protection and power cables, in compliance with applicable electrical codes and OSHA requirements. The Contractor is responsible for proper connection and installation of electrical wiring.

3.3 If sufficient electrical service is unavailable, the Contractor may need to supply electrical power to the site by fuel operated generator(s). Electrical power supply shall be sufficient for all equipment required for this work in operation throughout the duration of the work.

3.4 Negative pressure must be maintained in each active work area, until the area achieves satisfactory reoccupancy criteria and is approved by the Project Monitor to be deregulated.

3.5 Water service may not be available at the site. Contractor shall supply sufficient water for each shift to operate the decontamination units as well as to maintain the work areas adequately wet.

3.6 Ladders and/or scaffolds shall be in compliance with OSHA requirements, and of adequate length, strength and sufficient quantity to support the scope of work. Use of ladders/scaffolds shall be in conformance with OSHA 29 CFR 1926 Subpart L and X requirements.

3.7 Work performed at heights exceeding six feet (6') shall be performed in accordance with the OSHA Fall Protection Standard 29 CFR 1926 Subpart M including the use of fall arrest systems as applicable.

3.8 Data provided regarding PCB sampling conducted throughout the structure(s) is for informational purposes only. Under no circumstances shall this information be the sole means used by the Contractor for determining the presence and location of all PCB Waste. The Contractor shall verify all field conditions affecting performance of the work as described in these Specifications in accordance with applicable OSHA, USEPA, USDOT, and CTDEP standards. Compliance with the applicable requirements is solely the responsibility of the Contractor.

3.9 The PCB Engineer will provide a Project Monitor to oversee the activities of the Contractor. No PCB abatement work shall be performed until the Project Monitor is on-site.

3.10 All interior and exterior abatement areas are to be established in the same manner.

The abatement Contractor shall establish a Control Area around each area where removal actions are being performed. Only properly trained personnel associated with the removal or abatement will be allowed within the Control Areas that will be established by placing barriers with signs indicating that access to the area is restricted. The Contractor's field inspector will maintain the Control Areas and escort unauthorized personnel from the area promptly. Only those personnel actively working on the removal, abatement, and soil excavation actions will be allowed within the Regulated/Containment Area and they shall be equipped with appropriate Personal Protective Equipment (PPE).

The Contractor shall pre-clean the work areas using HEPA filtered equipment (vacuum) and/or wet methods as appropriate, collecting and properly containing all dust and debris identified as PCB Waste. Vacuum units, of suitable size and capabilities for the project, shall have HEPA filters capable of trapping and retaining at least 99.97 percent of all monodispersed particles of three micrometers in diameter or larger. Do not use methods that raise dust, such as dry sweeping or vacuuming with equipment not equipped with HEPA filters.

After pre-cleaning, movable objects shall be removed from the work areas with the utmost care to prevent damage of any kind and relocated to a temporary storage location coordinated with the PCB Engineer. The Contractor is responsible for protecting all fixed objects that are permanent fixtures or are too large to remove and

remain inside the Regulated Area. Fixed objects shall be enclosed with one layer of six (6) mil polyethylene sheeting sealed with tape.

The Contractor shall establish remote to the Regulated Area but within the Control Area, a Worker Decontamination Enclosure System consisting of Equipment Room, Shower Room and Clean Room in series.

The Shower Room shall be of sufficient capacity to accommodate the number of workers. One shower stall shall be provided for each eight (8) workers. Showers shall be equipped with hot and cold or warm running water through the use of electric hot water heaters supplied by the Contractor. No worker or other person shall leave a Regulated Area without showering. Shower water shall be collected.

The Contractor shall ensure that no personnel or equipment be permitted to leave the Control Area until proper decontamination procedures (including HEPA vacuuming, wet wiping and showering) to remove all PCB debris have occurred. No PCB-contaminated materials or persons shall enter the Clean Room.

The Contractor shall seal off all windows, doorways, skylights, ducts, grilles, diffusers, vents, light fixtures, electrical receptacles, suspended ceiling tile systems and any other openings between the Regulated Area and the uncontaminated areas outside of the Regulated Area, including the outside of the building, with critical barriers consisting of a minimum of one (1) layer of six (6) mil polyethylene sheeting securing the edges with tape. Doorways and corridors which will not be used for passage during work and separate the regulated areas from occupied areas must be sealed with fixed critical barriers constructed of 2" x 4" wood or metal framing 16" O.C., with ½" plywood on the occupied side and two layers of six (6) mil polyethylene sheeting on the Regulated Area side to prevent unauthorized access or air flow.

A Negative Pressure Enclosure (NPE) shall be constructed by the Contractor via covering of floor and wall surfaces with polyethylene sheeting sealed with tape. Polyethylene shall be applied alternately to floors and walls. Cover floors first, with a layer of six (6) mil polyethylene sheeting, so that polyethylene extends at least twelve (12) inches up on wall. Cover wall with a layer of six (6) mil polyethylene sheeting to twelve (12) inches beyond the wall/floor intersection, thus overlapping the floor material by a minimum of twenty-four (24) inches. Repeat the process for the second layer of polyethylene. There shall be no seams at wall-to-floor joints. Contiguous to the NPE, construct a single chamber airlock from six (6) mil polyethylene sheeting for entry/exit purposes into the regulated area.

Conspicuously label and maintain emergency and fire exits from the Regulated Area satisfactory to fire officials.

The Contractor shall create a negative pressure differential in the range of 0.02 to 0.04 inches of water column between the Regulated Area and surrounding areas by

the use of acceptable negative air pressure equipment. Exhaust air filtration units shall be equipped with HEPA filters capable of providing sufficient air exhaust to create a minimum pressure differential of 0.02 inches of water column, and to allow a sufficient flow of air through the area providing 4 air changes per hour. The Contractor shall provide a sufficient quantity of HEPA air filters to maintain the pressure differential throughout the duration of the project. An automatic warning system shall be incorporated into the equipment to indicate pressure drop or unit failure. Continuously monitor the pressure differential between the Regulated Area and surrounding area to ensure exhaust air filtration equipment maintains a minimum pressure differential of 0.02 inches of water column. The Contractor shall provide actual air flow measurement of filtration units while the unit is in place and calculate actual air exchange rates. No air movement system or air filtering equipment shall discharge unfiltered air outside the Regulated Area.

The Contractor shall post warning signs to deter unauthorized personnel from entry. Additional signs may require posting following construction of workplace enclosure barriers.

3.11 Personnel Protection

The Contractor shall utilize all appropriate engineering controls and safety and protective equipment while performing the work in accordance with applicable OSHA, USEPA, USDOT, CTDEP, CTDPH regulations, and other Contract provisions.

The Contractor shall provide and require all workers to wear protective clothing in the Regulated Areas where PCB contamination exists. Protective clothing shall include impervious coveralls with elastic wrists and ankles, head covering, gloves and foot coverings.

Respiratory protection shall be provided and shall meet the requirements of OSHA as required in 29 CFR 1910.134. A formal respiratory protection program must be implemented in accordance with 29 CFR 1910.134. The Contractor shall provide respirators from among those approved as being acceptable for protection by the National Institute for Occupational Safety and Health (NIOSH) under the provisions of 30 CFR Part ll.

All other necessary personnel protective equipment (i.e. hardhat, work boots, safety glasses, hearing protection, etc.) required to perform the PCB abatement work activities shall conform to all applicable federal, state and local regulations and other applicable provisions of the Contract.

All other qualified and authorized persons by the Owner and/or Contractor entering into a Regulated Area shall be required to adhere to the requirements of personnel protection as stated in this section and all other applicable provisions of the Contract. All unqualified and unauthorized persons shall be escorted outside of the Regulated

Area and if due to other provisions of the Contract, escorted outside of the project site during the PCB work.

3.12 PCB Abatement Procedures

The Site Supervisor, as the OSHA Competent Person shall be at the site at all times during the performance of abatement work.

The Contractor shall not begin abatement work until authorized by the Project Monitor, following a pre-abatement visual inspection.

All workers and authorized persons shall enter and leave the Regulated Area through the contiguous airlock, leaving contaminated protective clothing in the airlock for disposal of as PCB contaminated waste. No one shall eat, drink, smoke, chew gum or tobacco, or apply cosmetics while in a Regulated Area.

The following details the extent of each phase of operation designated for this work. Phase areas may be combined or divided at the direction of the PCB Engineer. Proceed through the sequencing of the work phases under the direction of the Engineer.

See the PCB Site Remedial Plan and other Contract Drawings provided for the site for specific locations of PCB containing caulks and glazing. The specific locations for these materials and amount of associated building materials to be removed as well are indicated on these drawings and the PCB Site Remedial Plan.

During removal, the Contractor shall spray PCB containing building material with water using airless spray equipment capable of providing a "mist" application to reduce airborne dust. Hose length shall be sufficient to reach all of the Regulated Area. Do not "flood" the area with hose type water supply equipment with the potential to create water releases from the regulated area.

The Contractor shall employ mechanical methods such as cutting, grinding, and pneumatic hammers to remove PCB contaminated wastes. The methods employed must not damage the integrity of the containment structure and shall not create a breach through which contaminated dust may escape. The Contractor shall be responsible for all costs associated with decontamination and remediation in the case of a containment breach.

In order to minimize PCB concentrations inside the Regulated Area, the Contractor shall remove the materials in manageable sections. In addition, PCB Waste materials removed from any elevated level shall be carefully lowered to the floor.

The Contractor shall promptly place the PCB Waste material in disposal containers (six (6) mil polyethylene bags/ poly-lined dumpsters, etc.) as it is removed. Large components removed intact may be wrapped in one (1) layer of six (6) mil

polyethylene sheeting secured with tape. As the disposal containers are filled, the Contractor shall promptly seal the containers, apply caution labels and clean the containers before transportation to the airlock. Bags shall be securely sealed to prevent accidental opening and leakage by taping in gooseneck fashion. Small components and PCB Waste material with sharp-edged components (e.g. nails, screws, metal lath, tin sheeting) which could tear polyethylene bags and sheeting shall be placed in clean drums and sealed with locking ring tops. Drums may not be placed intact into final waste disposal containers intact and may be reused by the Contractor after the contents have been emptied. However, any drums use to handle wastes must be broken down and disposed of properly with other PCB wastes.

All waste containers shall be leak-tight. Containers shall be decontaminated by wet cleaning and HEPA vacuuming within the airlock prior to exiting the regulated area. Wet clean each container thoroughly before moving to a Waste Holding Area.

If at any time during PCB Waste removal, the Project Monitor should suspect contamination of areas outside the Regulated Area, the Contractor shall immediately stop all abatement work and take steps to decontaminate these areas and eliminate causes of such contamination. Unprotected individuals shall be prohibited from entering contaminated areas.

After completion of abatement work, all surfaces from which PCB Waste has been removed shall be wet brushed, using a nylon brush, wet wiped and sponged or cleaned by an equivalent method to remove all visible material (wire brushes are not permitted). Cleaning shall also include the use of HEPA filtered vacuum equipment.

The Contractor shall also remove and containerize all visible accumulations of PCB Waste and/or PCB contaminated debris which may have splattered or collected on the polyethylene engineering controls/barriers.

The Contractor shall clean surfaces of contaminated containers and equipment thoroughly by vacuuming with HEPA filtered equipment and wet sponging or wiping before moving such items into the airlock for final cleaning and removal to uncontaminated areas.

The Contractor shall remove contamination from the exteriors of the air filtration devices, scaffolding, ladders, extension cords, hoses and other equipment inside the Regulated Area. Cleaning may be accomplished by brushing, HEPA vacuuming and/or wet cleaning. The Contractor shall wet wipe the Regulated Area beginning at the point farthest away from the negative air filtration units using cotton rags or lint free paper towels. Rags and towels shall be disposed of after each use. Workers should avoid the use of dirty rags to insure proper cleaning of surfaces. Mop the entire floor with a clean mop head and amended water. Water shall be changed frequently

Once the Regulated Area surfaces have dried, the Project Monitor shall perform a thorough post abatement visual inspection. The Project Monitor will visually inspect the Regulated Area and the surrounding Control Area to determine that the Contractor has sufficiently decontaminated and removed any dust that might contain PCBs. All surfaces within the Regulated Area, including but not limited to ledges, beams, and hidden locations shall be inspected for visible residue. Evidence of dust contamination that would be indicative of PCB contamination identified during this inspection will necessitate further cleaning as heretofore specified. The area shall be re-cleaned at the Contractor's expense, until the standard of cleaning is achieved.

Once the area has received a satisfactory post-abatement visual inspection, any equipment, tools or materials not required for completion of the work, shall be removed by the Contractor from the Regulated Area. Negative air filtration devices shall remain in place and operating for the remainder of the clean-up operation.

3.13 Phased PCB Abatement Procedures

Should the potential exist for an unsafe condition to be produced by removing PCB contaminated building materials prior to removing clean materials, then the Contractor shall notify the Owner and the PCB Engineer and Project Monitor of such concerns and mitigate potentially unsafe conditions.

Should PCB contaminated building material need to remain to prevent an unsafe situation, the PCB Engineer shall collect the required verification samples prior to the performance of any demolition in the area. The Contractor shall then physically demark the line of clean building materials as determined by the verification sampling on the structure by painting or otherwise marking the structure so that it is clearly visible.

Once the area is marked, the Contractor may remove clean building materials as described elsewhere in the Contract Document. After the clean building materials have been removed to the marked line, PCB Contaminated building materials shall be abated according to the procedures stated in section 3.12 of this specification.

3.14 Post-Abatement Reoccupancy Procedures

The Project Monitor shall collect verification samples as per the EPA Region 1 Standard Operating Procedure for Sampling Concrete at the frequency specified in the approved PCB Site Remedial Plan. The verification samples will be analyzed for PCBs using EPA Methods 3540 and 8082. Analysis of verification samples will be expedited but the Contractor shall expect 48 to 72 hours (these hours do not include weekend and/or holiday hours) delay until analytical results are available.

Federally and Non-federally Regulated PCB Waste (demolition/renovation areas): In areas where PCB Wastes have been removed along with the associated building materials, the remedial standard to be achieved by all verification samples is <1

mg/kg total PCBs. If this standard is achieved then additional reoccupancy work will be performed. If the remedial standard is exceeded, the Contractor shall be instructed to remove additional building materials as instructed by the Project Monitor.

Non-federally Regulated PCB Waste (non-demolition areas): Work involving non-federally regulated PCB waste in non-demolition/renovation areas, shall be scheduled during school vacations, when school is not in session. Such work shall be started and completed within such schedule. Work shall be completed at least ten (10) days prior to students returning to school. In non-demolition/renovation areas, non-federally regulated PCB-containing caulks and/or glazing shall be removed and the associated building materials shall be cleaned in accordance with these Specifications and left in place. The remedial standard to be achieved by the verification samples collected from the associated building materials is <1 mg/kg total PCBs. If this standard is achieved in the building materials left in place, then additional reoccupancy work will be performed. If this standard is not achieved, then an encapsulant shall be applied by the Contractor to the area where the caulk and glazing were in contact with building materials and after the encapsulant has cured, new caulk or glazing shall be applied by the Contractor.

Following the collection and analysis of verification samples indicating that remediation goals have been achieved or the encapsulation of other materials, the Project Monitor shall collect wipe samples of surfaces within the Containment Area to determine if the decontamination performed by the Contractor has been sufficient to remove potentially PCB containing dust. The PCB Engineer shall obtain expedited analyses of these samples from an outside laboratory, but the Contractor shall expect 48 to 72 hours (these hours do not include weekend and/or holiday hours) delay until analytical results are available. The PCB Engineer shall instruct the Contractor to perform additional decontamination if wipe sample results are ≥1.0 μg/100 cm2. Areas which do not comply shall continue to be cleaned by and at the Contractors expense, until the specified Standard of Cleaning is achieved as evidenced by results of wipe testing. When the Regulated Area passes the re-occupancy clearance, controls established by these Specifications may be removed.

Wipe sampling will not begin until after the area has received an acceptable post abatement visual inspection and verification sample results indicate compliance with remedial standards.

Analysis shall follow the requirements of EPA Methods 3540 and 8082.

Each homogeneous Regulated Area which does not meet the clearance criteria shall be thoroughly recleaned using HEPA vacuuming and/or wet cleaning, with the negative pressure ventilation system in operation. New samples shall be collected in the Regulated Area. The process shall be repeated until the Regulated Area passes the test, with the cost of repeat sampling being borne entirely by the Contractor.

For a PCB Waste abatement project with more than one homogeneous Regulated Area, the release criterion shall be applied independently to each Regulated Area.

These clearance sampling procedures shall be implemented for both interior and exterior NPE work areas.

3.15 Post Abatement Work Area Deregulation

The Contractor shall remove all remaining polyethylene, including critical barriers, and airlocks with the negative air filtration devices in operation. HEPA vacuum and/or wet wipe any visible residue which is uncovered during this process. All waste generated during this disassembly process shall be discarded as PCB Bulk Product Waste.

A final visual inspection of the work area shall be conducted by the PCB Engineer and the Project Monitor to ensure that all visible accumulations of PCB Waste materials have been removed and that no equipment or materials associated with the abatement work remain.

The Contractor shall restore all work areas and auxiliary areas utilized during work to conditions equal to or better than original. Any damage caused during the performance of the work activity shall be repaired by the Contractor at no additional expense to the Owner.

3.16 Encapsulation Procedures

The contractor shall encapsulate building materials located in areas where renovation/demolition is not being performed as indicated on the Contract Drawings and these Specifications with an elastomeric, crack bridging, anti-carbonation, protective coating to be applied as the encapsulant. Following completion of encapsulant application, including cure time, the Contractor shall reinstall caulk as per and meeting the specifications contained within Section 079200 – Joint Sealants.

The Contractor shall install materials in accordance with all safety and weather conditions required by manufacturer or as modified by applicable rules and regulations of local, state and federal authorities having jurisdiction. Consult Material Safety Data Sheets for complete handling recommendations.

All encapsulant materials shall be delivered in original, unopened containers with the manufacturer's name, labels, product identification, and batch numbers. Damaged material shall be removed from the site immediately. All materials shall be stored off the ground and protect from rain, freezing or excessive heat until ready for use.

The Contractor shall not apply material if it is raining or snowing or if such conditions appear to be imminent. Minimum application temperature are 45°F (7°C)

and rising. Precautions shall be taken by the Contractor to avoid damage to any surface near the work zone due to mixing and handling of the specified material.

The encapsulant shall be Sikagard 550W (or 670W) Elastocolor, as manufactured by Sika Corporation, 1682 Marion Williamsport Road, Marion, Ohio, or equivalent. The Contractor shall provide submittals for the encapsulant to be used prior to bringing the materials onsite for use.

Elastomeric Acrylic Coating shall be one hundred percent (100%) Acrylic Emulsion with the following properties:

3.16.1 Water vapor permeable

3.16.2 Can bridge dynamically moving cracks

3.16.3 Crack bridging properties maintained at low temperatures

3.16.4 The material shall be resistant to dirt pick-up and mildew

3.16.5 Pot Life: indefinite

3.16.6 Tack Free Time 6 Hours @ 73°F, 50% Relative Humidity. Final Cure < 24 Hours

3.16.7 Carbon Dioxide Diffusion: μCO2 214,000 Carbon Dioxide Diffusion Resistance at 16 mils (400 microns)

3.16.8 SdCO2 = 299 ft. (equivalent air thickness) i.e. Approx. 9-in. of standard concrete cover.

3.16.9 Water Vapor Diffusion: μH2O 2,146 Water Vapor Diffusion Resistance at 16 mils SdH2O = 2.6 ft. (0.8m)

3.16.10 Moisture Vapor permeability (ASTM E96) 14.5 perms

3.16.11 Tensile Properties (ASTM D-412 Modified)

3.16.12 7 day-Tensile strength 190 psi (1.3 MPa) - Elongation at break 820% - 340% @ 0°F (-18°C)

3.16.13 Crack Bridging (at 16 mils = 400 microns DFT

3.16.14 Static (at –4°F/-20°C) 30 mils (0.75mm)

3.16.15 Dynamic>1000 cycles (at –4°F/-20°C) 12 mils (0.30mm)

3.16.16 Resistance to wind driven rain (TT-C-555B): No passage of water through coating

3.16.17 Weathering (ASTM G-23) 10,000 hours excellent, no chalking or cracking.

3.16.18 Solids Content: by weight – 62% by volume – 55%

3.16.19 Flame Spread and Smoke Development (ASTM E-84-94)

3.16.20 Flame Spread 5 Smoke Development 5 Class Rating A

Note: Tests above were performed with the material and curing conditions @ 71°F – 75°F and 45-55% relative humidity.

Building substrate to which the encapsulant coating is to be applied must be clean, sound, and free of surface contaminants. Remove dust, laitance, grease, oils, curing compounds, form release agents and all foreign particles by mechanical means. Substrate shall be in accordance with ICRI Guideline No. 03732 for coatings and fall within CSP1 to CSP3.

The Contractor shall stir materials to ensure uniformity using a low speed (400-600 rpm) drill and paddle. To minimize color variation, blend two batches of material. For small defects and cracks the Contractor shall apply Surface Filler by "Brush Grade" encapsulant generously over the center of the cracks. The Contractor shall feather material over a two-inch wide area and allow a minimum 24 hours to cure before overcoating. For large defects and cracks (cracks >20mils) the Contractor shall blow out the cut with oil-free compressed air and fill the crack with joint sealant conforming to specifications allowing for a small crest to remain as this will compensate for any shrinkage that might occur. The Contractor shall allow 24 hours-minimum cure before over coating with encapsulant.

For the final coating application, the Contractor shall apply by brush or roller over the entire area to be encapsulated by moving in one direction. The Contractor shall apply a minimum of two coats. Each coat should be applied at a rate not to exceed 100 sq. ft. per gallon. The total dry film thickness shall be minimum 8 - 10 dry mils per coat. Allow a minimum of 2 hours prior to re-coating. When applying the coating, never stop the application until the entire surface has been coated. Always stop application at an edge, corner, or joint.

3.17 Waste Disposal

If the Contractor chooses to store soil onsite prior to transport offsite for disposal, the Contractor shall construct a secured Waste Storage Area at a location agreed to by the Contractor and the PCB Engineer within contract limit lines. The contract limit lines are to be secured as described elsewhere in these specifications and entry shall be limited to Contractor Personnel only. The Waste Storage Area shall enclose all Suitable Waste Storage Containers actively in use with temporary fencing. The fence shall be marked with a Large M_L mark as specified in 40 CFR Part 761 Subpart C.

Unless otherwise specified by the Owner, all removed materials and debris resulting from execution of this work shall become the responsibility of the Contractor and removed from the premises. Materials not scheduled for reuse shall be removed from the site and disposed of in accordance with all applicable Federal, State and Local requirements.

Waste removal dumpsters and cargo areas of transport vehicles shall be lined with a layer of six (6) mil polyethylene sheeting to prevent contamination from leaking or spilled containers. Floor sheeting shall be installed first, and shall be extended up sidewalls 12-inches. Wall sheeting shall overlap floor sheeting 24-inches and shall be

taped into place. A single liner may be employed as long as it entirely covers the interior of the waste container.

All containers used to transport PCB Waste for disposal must be marked with a Large ML mark as specified in 40 CFR Part 761 Subpart C. The signs must be posted so that they are plainly visible.

Ensure all waste containers (bags, etc.) are properly packed, sealed and labeled with USEPA and USDOT shipping labels. For each shipment of PCB Waste, the Contractor shall complete a PCB waste shipment manifest.

Authorized representatives signing waste shipment records on behalf of the generator must have USDOT Shipper Certification training in accordance with HMR 49 CFR Parts 171-180.

Transport vehicles hauling PCB Waste shall have appropriate USDOT placards visible on all four (4) sides of the vehicle.

The Contractor shall dispose of PCB Waste at a TSCA-permitted facility.

Any PCB Waste materials which also contain other hazardous contaminants shall be disposed of in accordance with the EPA's Resource Conservation and Recovery Act (RCRA), CTDEP and ConnDOT requirements. Materials may be required to be stored on-site and tested by the Project Monitor to determine proper waste disposal requirements.

3.18 Decontamination

The Contractor shall decontaminate all moveable equipment that contact PCB Wastes in accordance with the procedures specified in §761.79(c). The Contractor shall not remove any equipment from the Contaminant Zone until it has been properly decontaminated.

Specifically, the Contractor shall employ double wash/rinse procedures as specified in 40 CFR Part 761 Subpart S or swab non-porous surfaces that have contacted PCB wastes with a solvent as specified in §761.79(c)(2)(i). The Contractor shall segregate all liquid waste streams and be responsible for characterizing these wastes for disposal purposes. Solid wastes generated during decontamination shall be stored for disposal with the other PCB wastes generated during remediation activities.

The PCB Engineer shall be responsible for ensuring that decontamination procedures are followed and that wastes are appropriately characterized and disposed of properly.

3.19 Project Closeout Data:

Provide the Owner and PCB Engineer, within 30 days after PCB Waste has been disposed of, a compliance package; which shall include, but not be limited to, the following:

3.19.1 Site Supervisor job log;
3.19.2 Completed waste shipment records.

The Contractor shall submit the original completed waste shipment records to the PCB Engineer.

3.20 Method of Measurement:

No measurement will be made for the abatement work in this Section. The completed work shall be paid as a lump sum. The lump sum bid price for PCB abatement shall include the specialty services of the PCB Removal Contractor including: labor, materials, equipment, insurance, permits, notifications, submittals, personal air sampling, personal protection equipment, temporary enclosures, utility costs, incidentals, fees and labor incidental to the removal of PCB Wastes, including close out documentation.

Measurement for payment for waste disposal will be on a per ton basis. The unit price for PCB Bulk Product Waste Disposal shall include providing adequate containers for storage of PCB wastes until they are removed from the site and the transport and disposal of these materials at a TSCA-permitted facility. Payment for the disposal of PCB Bulk Product Waste disposal shall be made when the Contractor submits manifests with the mass of waste disposed and signed by the receiving facility and the Certificates of Disposal provided by the waste disposal facility for each manifested load to the Engineer. Once the manifest and Certificate of Disposal has been received, the Owner shall make payment to the Contractor.

Deducts from payment for containments without negative pressure will be made on a per containment basis. The deduct cost shall account for construction of containment as described in this section without the negative pressure generating air handling units and HEPA filtration of discharge air.

Pay Item	Pay Unit
PCB Abatement	Lump Sum
PCB Waste Disposal	Per Ton

Unit Price Schedule – Additional or Reduced PCB Abatement

This schedule applies only to items beyond the scope specified in the Contract Documents or if there is a reduction in the scope of work or the requirements of the work. Costs associated with the use of unit price items is inclusive of all labor, equipment, materials, and overhead and profit.

Item	Item Description	Unit	Add/Deduct Cost
1	Containment Area – Set up of containment area (up to 400 square feet area) as described in these specifications.	EA	$1,300
2	Containment Area – Set up of containment area (up to 400 square feet area) as described in these specifications except for installation of equipment used to create and maintain negative pressure.	EA	$1,100
3	PCB Contaminated caulk abatement with removal of 6" of building materials on either side of the caulked joint.	LF	$4.73
4	PCB Contaminated caulk abatement with removal of 12" of building materials on either side of the caulked joint	LF	$8.78
5	PCB Contaminated caulk abatement with no removal of building materials	LF	$3.15
6	Removal of door and contaminated caulk	EA	$125

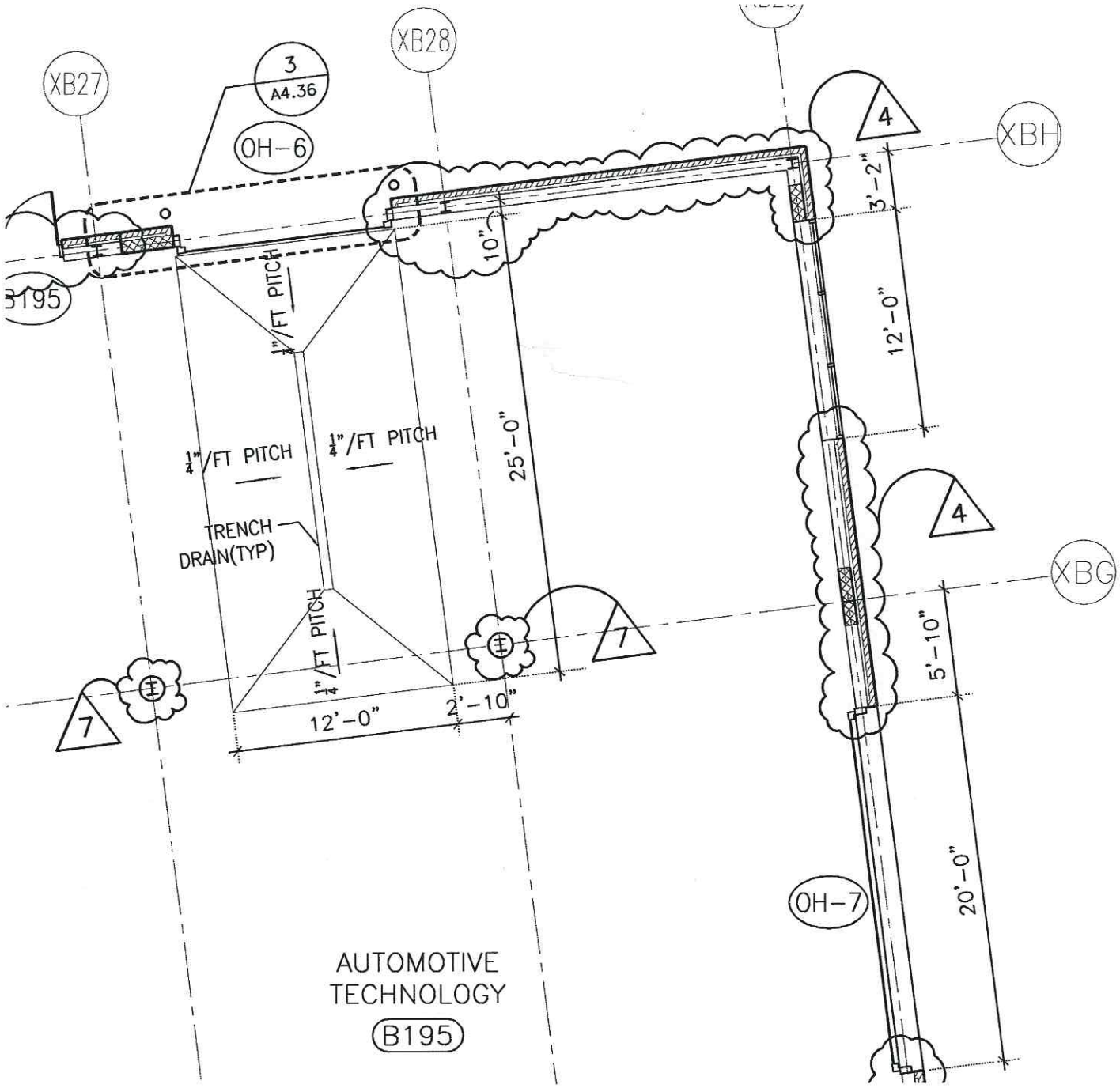

1 FIRST FLOOR PLAN - AREA "B" & "C"

SCALE: 1/8"=1'-0"

REFERENCE SHEET: 1/A1.04
REFERENCE ADDENDUM: #7

TAI SOO KIM PARTNERS TAI SOO KIM 146 Wyllys Street Hartford, Connecticut Tel: (860) 547-1970 Fax: (860) 249-0695	JOB NAME/NUMBER H.C. WILCOX TECHNICAL HIGH SCHOOL/BI-RT-843 SCALE: 1/8" = 1'-0" DATE: 09/08/2010	TITLE FIRST FLOOR PLAN AREA "B" & "C"	DRAWING NO. SKA-22

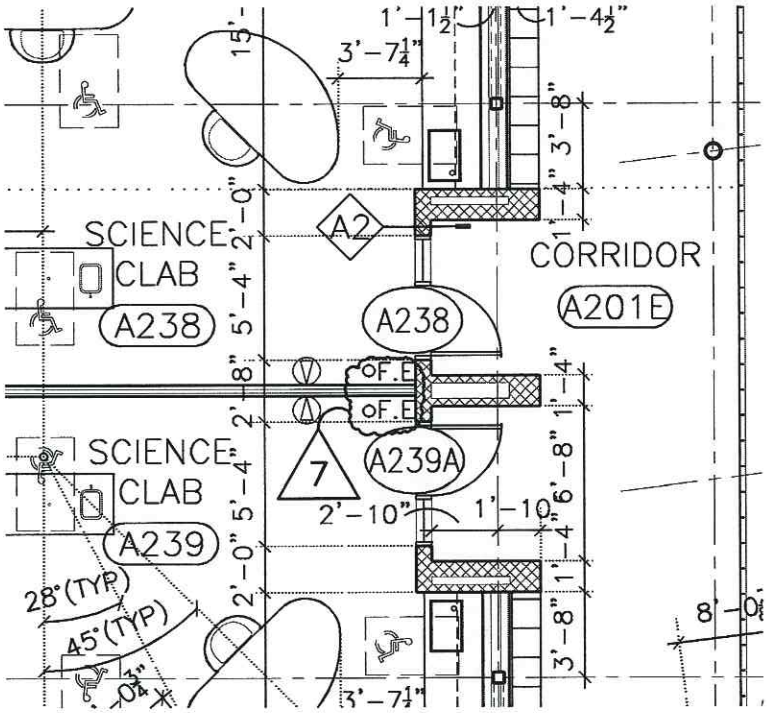

1 SECOND FLOOR PLAN - AREA "A"

SCALE: 1/8"=1'-0"

REFERENCE SHEET: A1.07
REFERENCE ADDENDUM: #7

TAI SOO KIM PARTNERS 146 Wyllys Street Hartford, Connecticut Tel: (860) 547-1970 Fax: (860) 249-0695	JOB NAME/NUMBER H.C. WILCOX TECHNICAL HIGH SCHOOL/BI-RT-843 SCALE: 1/8" = 1'-0" DATE: 09/08/2010	TITLE SECOND FLOOR PLAN AREA "A"	DRAWING NO. SKA-23

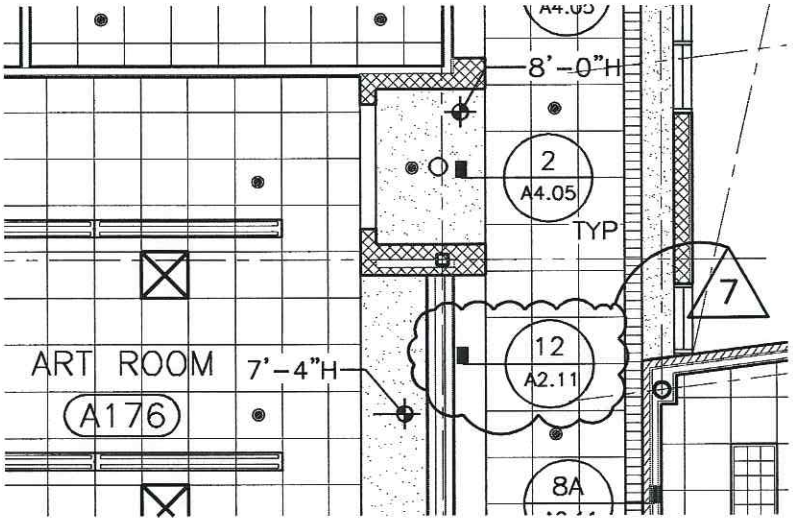

FIRST FLOOR REFLECTED CEILING PLAN - AREA "A"

1

SCALE: 1/8"=1'-0"

REFERENCE SHEET: A2.02
REFERENCE ADDENDUM: #7

TAI SOO KIM PARTNERS 146 Wyllys Street Hartford, Connecticut Tel: (860) 547-1970 Fax: (860) 249-0695	JOB NAME/NUMBER H.C. WILCOX TECHNICAL HIGH SCHOOL/BI-RT-843 SCALE: 1/8" = 1'-0" DATE: 09/08/2010	TITLE FIRST FLOOR RCP AREA "A"	DRAWING NO. SKA-24

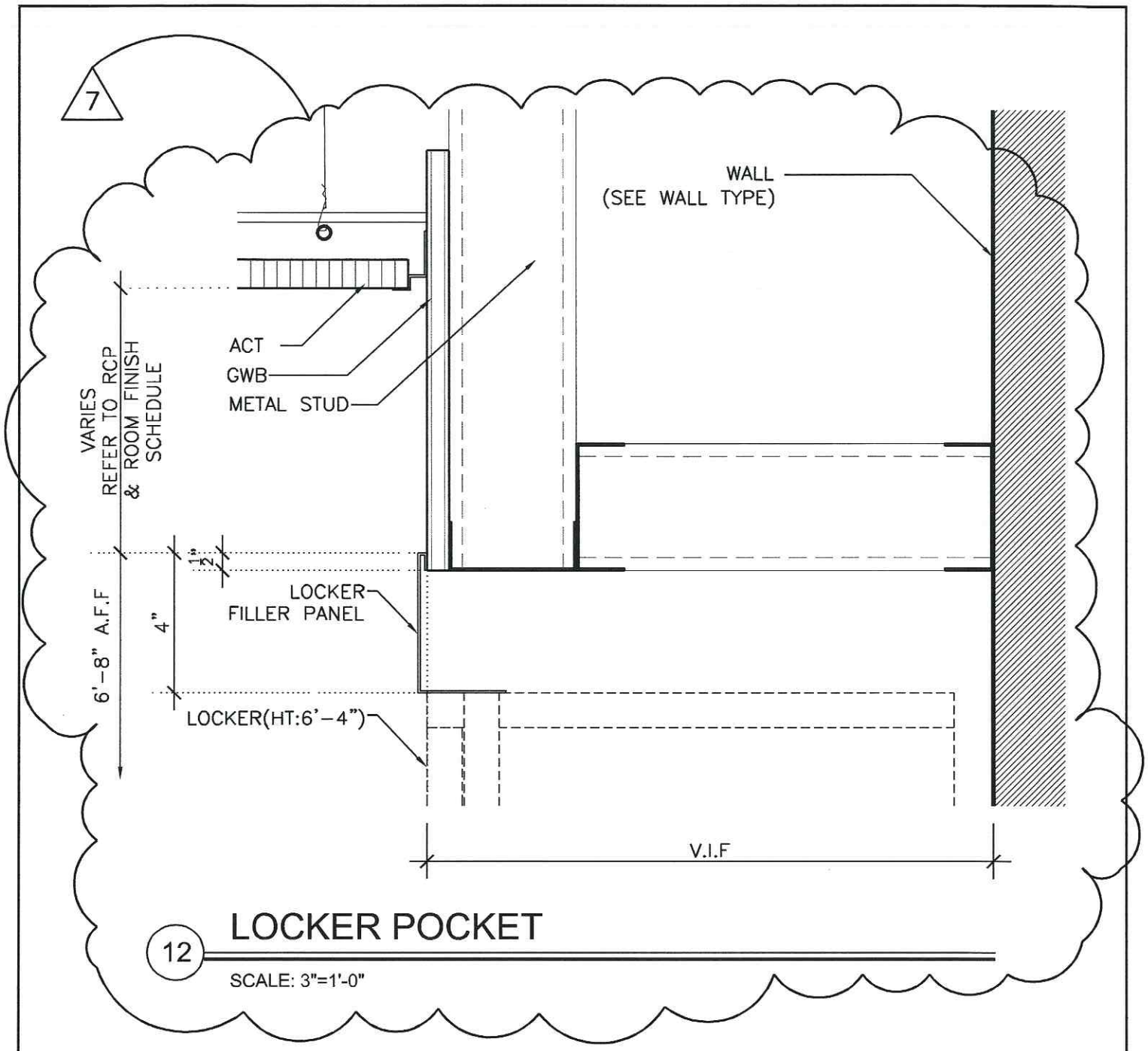

REFERENCE SHEET: 12/A2.11
REFERENCE ADDENDUM: #7

TAI SOO KIM PARTNERS 146 Wyllys Street Hartford, Connecticut Tel: (860) 547-1970 Fax: (860) 249-0695	JOB NAME/NUMBER H.C. WILCOX TECHNICAL HIGH SCHOOL/BI-RT-843 SCALE: 3" = 1'-0" DATE: 09/08/2010	TITLE CEILING DETAILS	DRAWING NO. SKA-25

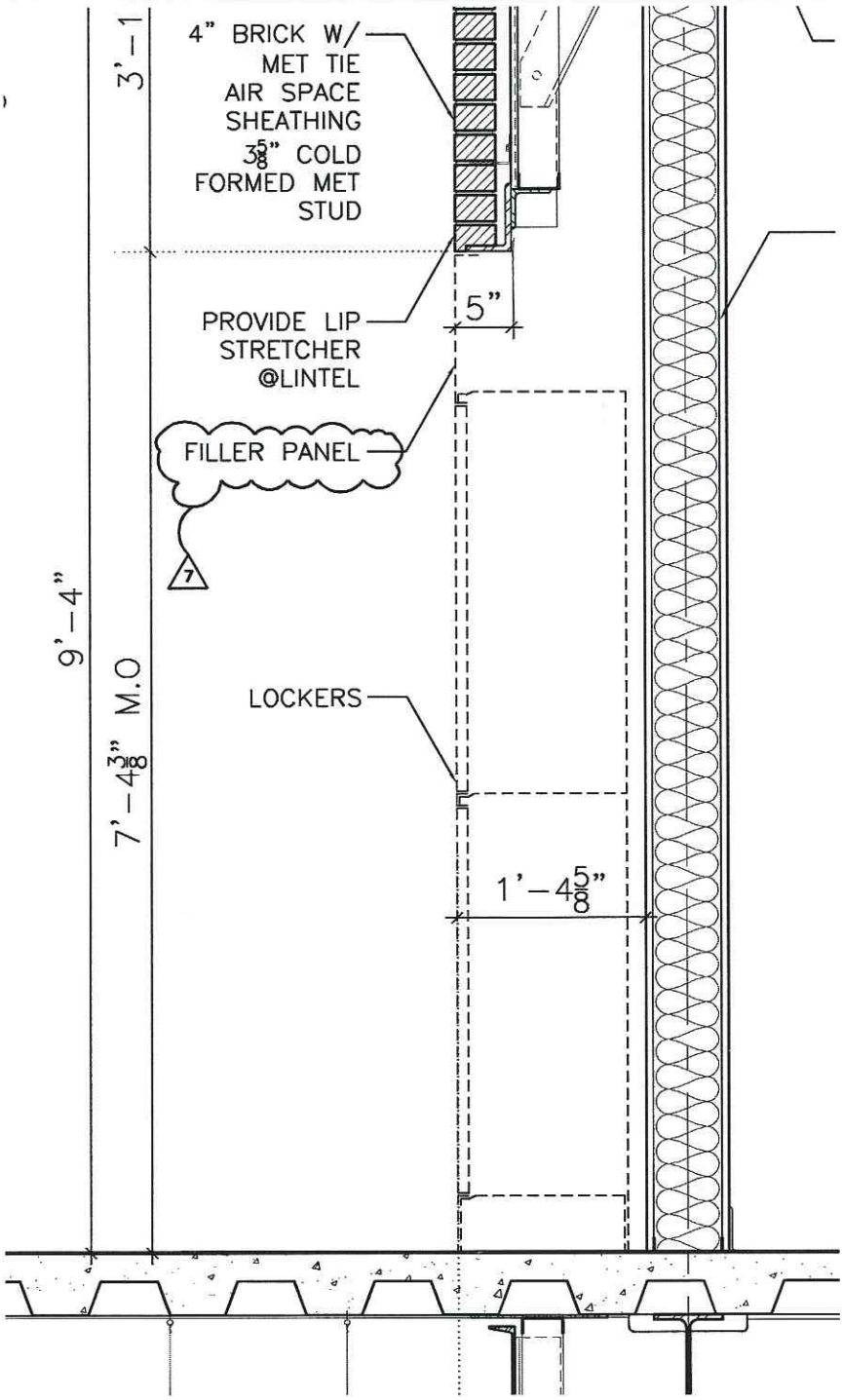

2 WALL SECTION

SCALE: 3/4"=1'-0"

REFERENCE SHEET: 2/A4.04
REFERENCE ADDENDUM: #7

TAI SOO KIM PARTNERS TAI SOO KIM 146 Wyllys Street Hartford, Connecticut Tel: (860) 547-1970 Fax: (860) 249-0695	JOB NAME/NUMBER H.C. WILCOX TECHNICAL HIGH SCHOOL/BI-RT-843 SCALE: 3/4" = 1'-0" DATE: 09/08/2010	TITLE WALL SECTIONS	DRAWING NO. SKA-26

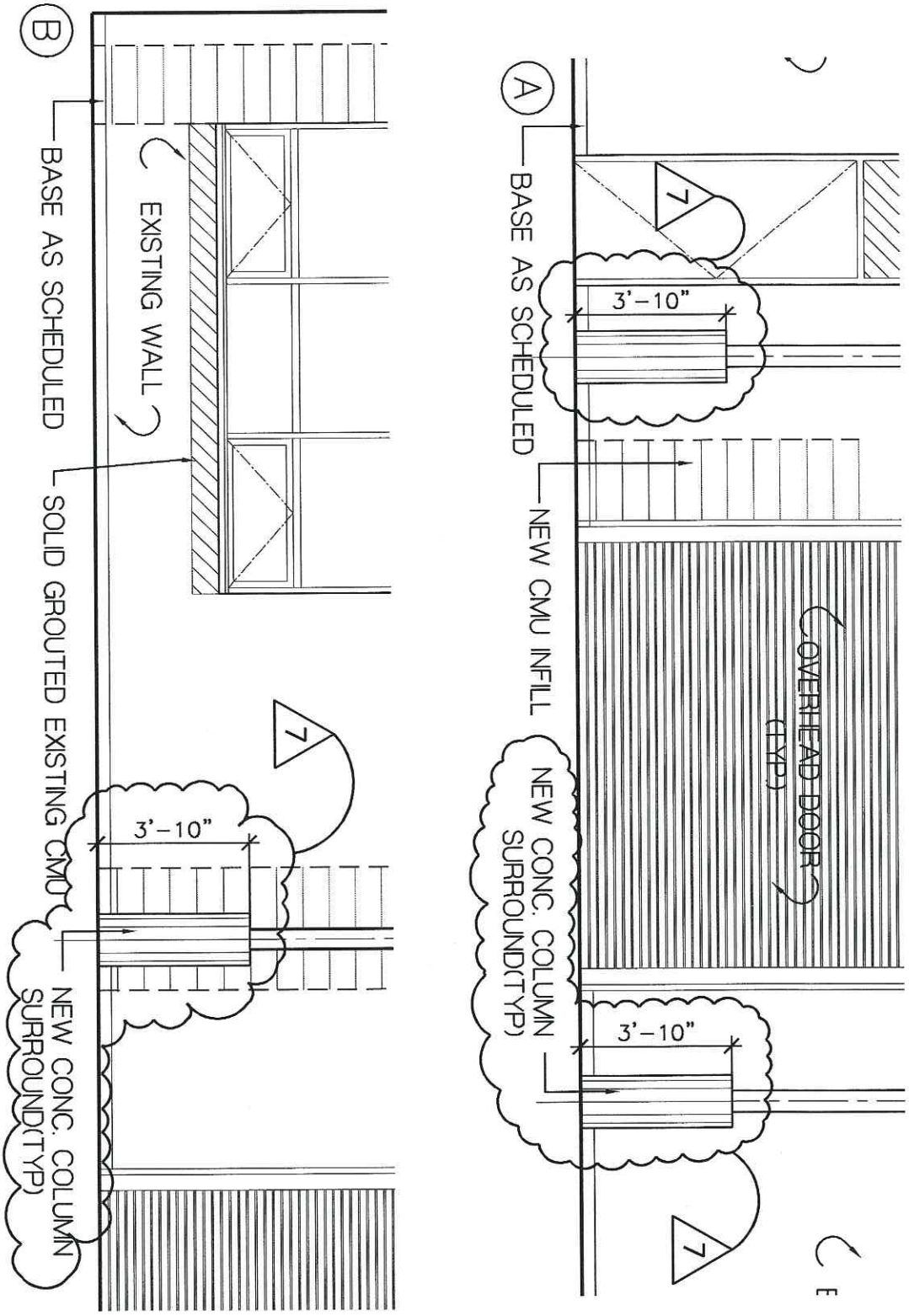

4 AUTOMOTIVE TECHNOLOGY B195

SCALE: 1/4"=1'-0"

REFERENCE SHEET: 4/A8.15
REFERENCE ADDENDUM: #7

TAI SOO KIM PARTNERS
TAI SOO KIM
146 Wyllys Street
Hartford, Connecticut
Tel: (860) 547-1970
Fax: (860) 249-0695

JOB NAME/NUMBER	TITLE	DRAWING NO.
H.C. WILCOX TECHNICAL HIGH SCHOOL/BI-RT-843	INTERIOR ELEVATIONS	SKA-27
SCALE: 3/4" = 1'-0"		
DATE: 09/08/2010		

ADDITIONS AND RENOVATIONS
HC WILCOX REGIONAL VOCATIONAL TECHNICAL SCHOOL
MERIDEN, CONNECTICUT
PROJECT: BI-RT- 843

BID OPENING	**1:00 PM**	**September 15, 2010**
ADDENDUM NUMBER 6	**DATE OF ADDENDUM**	**August 27, 2010**

The following clarifications are applicable to drawings and specifications for the project referenced above.

Item 1

In Project Manual, Table of Contents, Add the following below APPENDIX #2:

APPENDIX #3, The Self Implementing Clean-Up Plan H.C. Wilcox Technical High School, 227.

Item 2

Add APPENDIX #3 The Self Implementing Clean-Up Plan H.C. Wilcox Technical High School.

Item 3

In Section 015000 3.3 Support Facilities Installation, sub-section B.2 add:

y. (1) HP Scanjet N7710 or equal.

Scanner type	Sheet fed
Scan resolution, optical	Up to 600 dpi
Daily duty cycle	Up to 1500 pages
Bit depth	48-bit internal/24-bit external
Levels of grayscale	256
Multifeed detection	Yes, ultrasonic
Automatic document feeder capacity	Standard, 50 sheets (20 lb; 75 g/m2)
Automatic document feeder speed	Up to 35 ppm/70 ipm
Transparency adapter	No
Scan size, maximum (ADF)	8.5 x 34 in
Scan Size Minimum	2 x 2.9 in

(ADF, imperial)	
Media types	Paper (plain, inkjet), envelopes, labels, business and insurance cards, embossed cards, plastic IDs
Media weights, recommended	16 to 32 lb
Scan file format	PDF, PDF/A, searchable PDF, PDF-MRC, JPG, BMP, UNICODE, RTF, DOC, XLS, XML, XPS (Windows Vista(TM) Ready only), TIFF, compressed TIFF (G3, G4, LZW), multi-page TIFF, PNG, TXT, HTML, WPD, OPF
Button functions	4 front-panel buttons (Cancel, Copy, Scan document to, Tools utility), Up and down arrows (Select profile number or number of copies), LCD display

Item 4

Section 001116, Invitation to Bid Pre-bid Conference, ADD:

The last day for bidders to issues questions to the Architect and DPW is Tuesday, August 31, 2010.

Record of Attendance for the Pre-bid Conference is provided for informational purposes only.

Item 5

Section 042000, Paragraph 2.11, B.1, CHANGE to read:

1. Copper-Laminated Flashing: For use with masonry back-up, provide 7-oz./sq. ft. copper sheet with non-asphalt adhesive glass fabric laminated to each copper face. Use only where flashing is fully concealed.

    a. Available Products

        1) York Manufacturing, Inc; York Multi-Flash 500
        2) Advanced Building Products; Copper Sealtite 2000
        3) Sandell Construction Solutions; Copper Fabric Flashing NA

Item 6

Section 055110, DELETE Paragraph 1.4, A.1.

Item 7

Section 057500, DELETE Paragraphs 2.4,D; 2.4D.1; 2.4, E; and 2.4, E.1

Item 8

Section 074243, Paragraph 2.4, A.2, ADD the following:

d. Feiteng Brand ACP

Item 9

Section 090160, Paragraph 1.2, A, CHANGE to read: "This Section includes restoration of existing wood athletic flooring exposed to view and does not include flooring concealed by bleachers while in the closed position."

Item 10

Section 090160, Paragraph 3.1, C.1.c, CHANGE to read: "Apply game lines and markers in widths and colors to re-create the existing layout, including center court artwork."

Item 11

Section 095429, Paragraph 2.1, A, ADD the following:

3. Architectural Components Group, Inc.

Item 12

Section 123553, Paragraph 2.5, A, CHANGE "Series 16000 Axis Table..." to read "Series 26050 Axis Table...".

Item 13

Section 123553, Paragraph 2.5, A, ADD the following:

3. ALC Collegedale
4. Labscape
5. Campbell Rhea

Item 14

Section 123553, Paragraph 2.5, C.1, CHANGE to read: "Vertical on doors and drawer fronts".

Item 15

Section 123553, Paragraph 2.5, E.1, CHANGE to read: "1/2-inch-thick hardwood plywood".

Item 16

Section 233113, Paragraph 3.9, C, CHANGE to read:

1. Install acoustic liner as follows:

a. Minimum of 10' upstream and downstream of all fans, except those serving toilets, exhaust serving labs, lavatories, kitchens, showers, outside air plenums and dishwashers.
b. In all transfer ducts.
c. Minimum 10' downstream of all VAV boxes.
d. In all supply and return ductwork run outs up to RGD take-offs in classrooms except for return mains in classrooms.
e. As indicated on drawings, as noted, or specified elsewhere.
f. No liner required on shop H&V units.

Item 17

Section 262200, Paragraph 2.4, A CHANGE to read:

1. Harmonics Limited, LLC Transmax model or equivalent with external surge protection device (model #SL2-200-4277/480-3GY-DL2 for service entrance equipment and model #TG-80-120/208 for local 120 volt panels) or equivalent by Powersmith or Acme Electric Corporation.

Item 18

Section 283100, Paragraph 2.1, A.1, DELETE all manufacturers except SimplexGrinnell LP. This is a proprietary specification.

Item 19

In Drawing A1.01, ADD CMU infills and locate door per SKA-14.

Item 20

In Drawing A8.01, ADD CMU infill per SKA-14A.

Item 21

In Drawing A1.03, ADD brick infills per SKA-15.

Item 22

In Drawing A3.03, ADD brick infills per SKA-15A.

Item 23

In Drawing A1.03, ADD elevation keys per SKA-16.

Item 24

In Drawing A8.12, Add CMU infills per SKA-16A.

Item 25

In Drawing A8.13, ADD CMU infill per SKA-17.

Item 26

In Drawing A4.10, Detail 1, CHANGE notes per SKA-18.

Item 27

In Drawing A8.14, ADD new CMU wall per SKA-18A.

Item 28

In Drawing A1.04, ADD CMU infills per SKA-19.

Item 29

In Drawing A8.15, ADD CMU infills per SKA-19A.

Item 30

In Drawing A8.16, ADD CMU infills per SKA-19B.

Item 31

In Drawing A3.05, ADD brick infills per SKA-19c.

Item 32

In Drawing A1.05, ADD CMU infill per SKA-20.

Item 33

In Drawing A6.04, detail 6A, CHANGE riser detail per SKA-21.

Item 34

In Drawing PH-1MEPFP, ADD keynote per SKPH-082410-1.

Item 35

In Drawing PH-1MEPFP, CHANGE per SKPH-082410-2.

Item 36

In Drawing M0.00, CHANGE Acoustical Note 1 per SKM-082410-6.

Item 37

In Drawing M3.02, CHANGE extent of acoustical liner per SKM-082410-1, SKM-082410-2, SKM-082410-3, SKM-082410-4, and SKM-082410-5.

Item 38

In Drawing P1.08, ADD floor drains per SKP-082710-1.

Item 39

In Drawing P1.03, ADD piping per SKP-082710-2.

Item 40

In Drawing E0.02, ADD light fixtures to the Light Fixture Schedule per SKE-082410-2.

Item 41

In Drawing E1.03, CHANGE Electric Room layout per SKE-082410-1.

Item 42

In Drawing E5.02, Detail 5, ADD the following Note:

> 100 Amp – 120/208V – 3 phase – 4 W + Ground shall be fed fraom a 60 Amp 3 pole circuit breaker in panel "DP-1". A disconnect switch shall be provided in front of and after the transformer to be located on the stage near the dimming panel. Refer to transformer schedule on drawing E4.01 for primary and secondary feeder requirements.

Item 43

In Drawing E2.07, CHANGE all type "A" light fixtures to type "A4" and type "A2" light fixtures to type "A5" in the following rooms: A202, A204, A207, A208, A209, A210, A211, A212, A213, A214, A215, and A216.

All questions must be in writing (not phone or e-mail) and must be forwarded to the consulting Architect/Engineer (Tia Soo Kim Partner, LLC - 860-249-0695) with copies sent to the DPW Project Manager (Barbara Cosgrove - 860-713-7264).

End of Addendum Number SIX

Gail Blythe, Associate Fiscal Administrative Officer
Department of Public Works

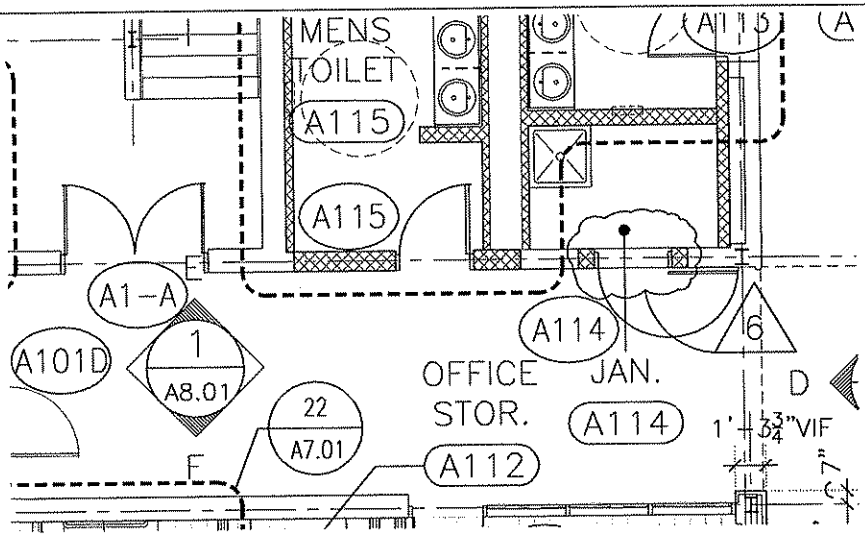

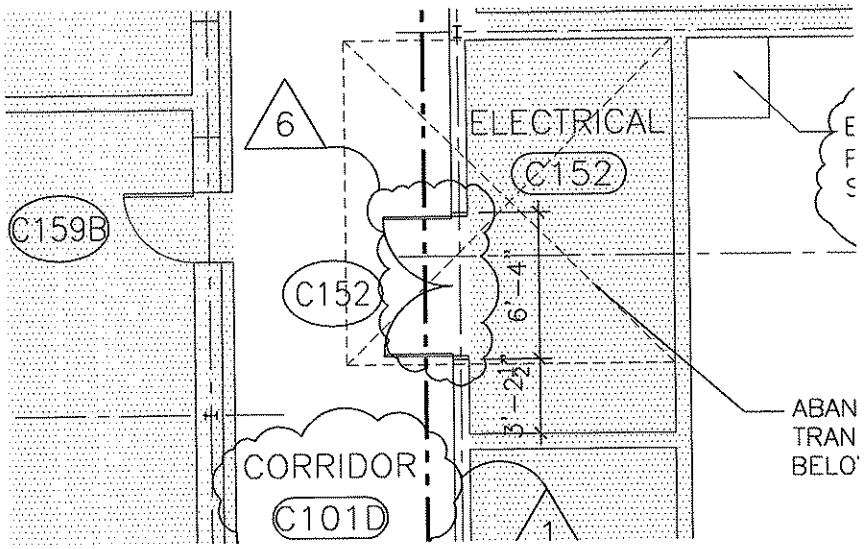

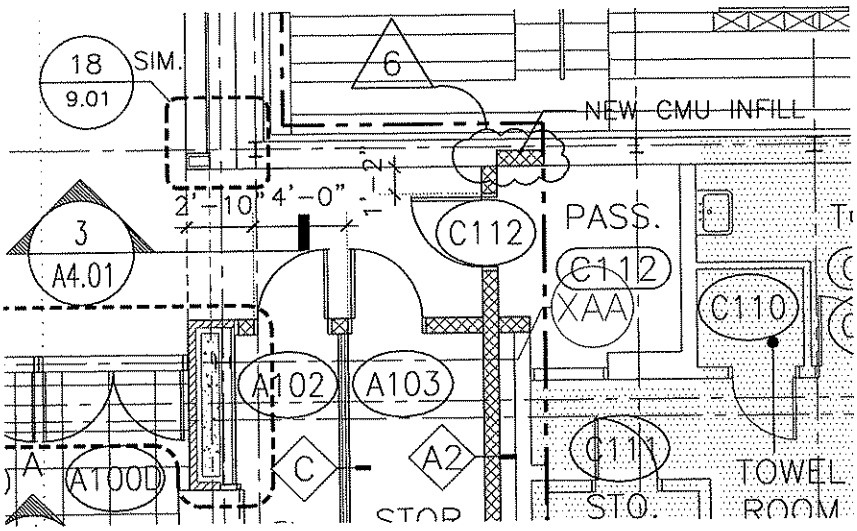

REFERENCE SHEET: 1/A1.01
REFERENCE ADDENDUM: #6

TAI SOO KIM PARTNERS 146 Wyllys Street Hartford, Connecticut Tel: (860) 547-1970 Fax: (860) 249-0695	JOB NAME/NUMBER H.C. WILCOX TECHNICAL HIGH SCHOOL/BI-RT-843 SCALE: 1/8" = 1'-0" DATE: 08/27/2010	TITLE FIRST FLOOR PLAN AREA A & C	DRAWING NO. SKA-14

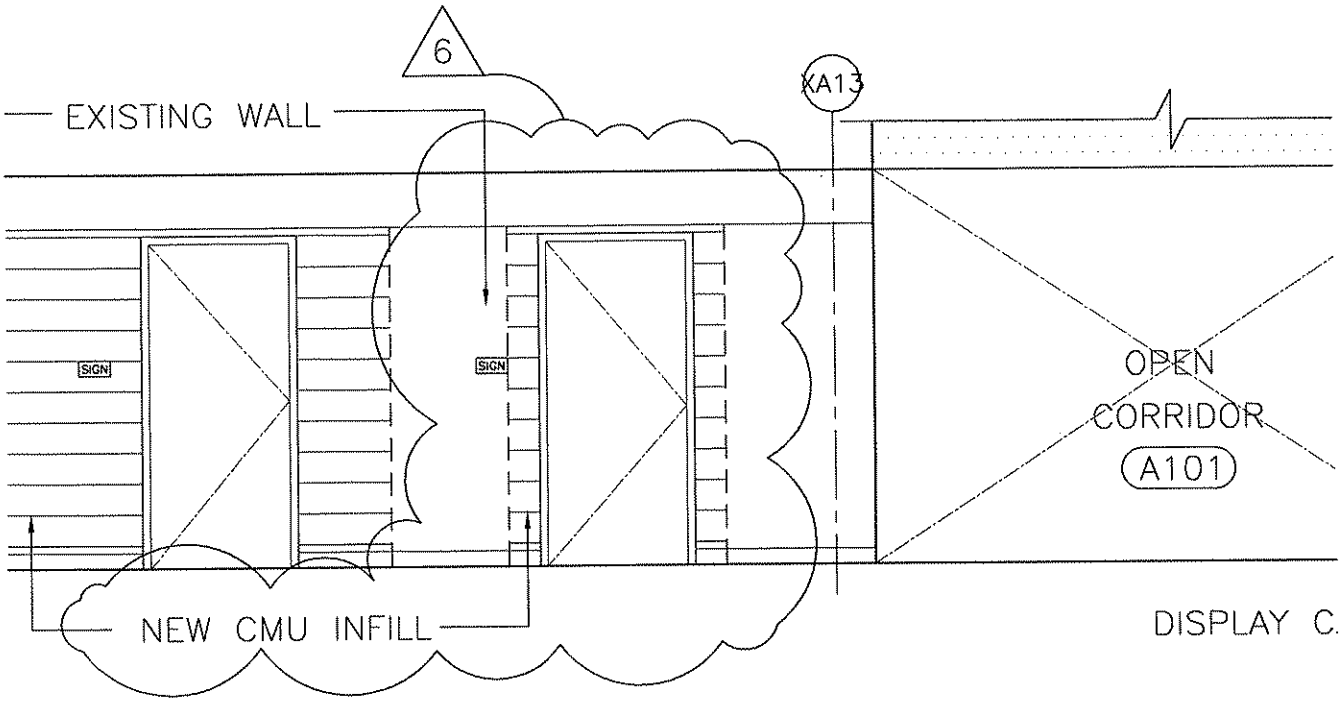

1 / A8.01 PARTIAL INT. ELEVATION @ CORRIDOR A1.01A
SCALE: 1/4"=1'-0"

REFERENCE SHEET: AS SHOWN
REFERENCE ADDENDUM: #6

TAI SOO KIM PARTNERS TAI SOO KIM 146 Wyllys Street Hartford, Connecticut Tel: (860) 547-1970 Fax: (860) 249-0695	JOB NAME/NUMBER H.C. WILCOX TECHNICAL HIGH SCHOOL/BI-RT-843 SCALE: AS SHOWN DATE: 08/27/2010	TITLE INTERIOR ELEVATION	DRAWING NO. SKA-14A

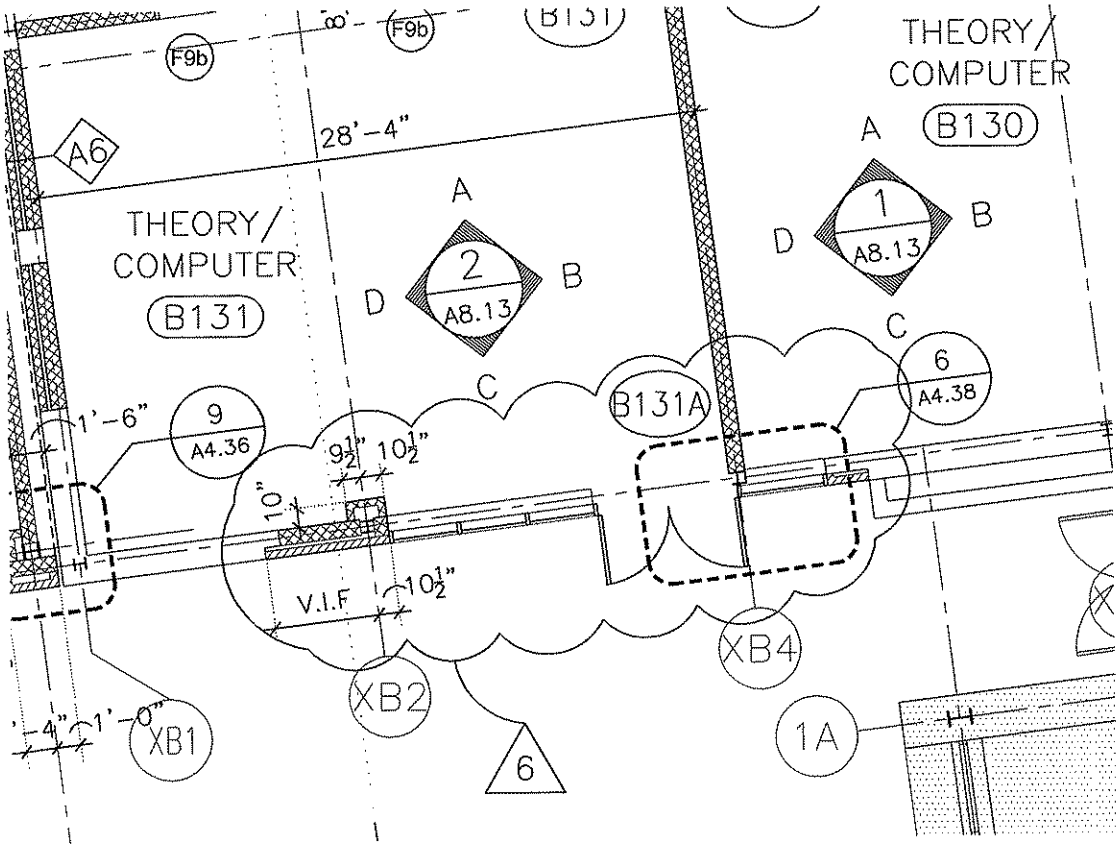

REFERENCE SHEET: 1/A1.03
REFERENCE ADDENDUM: #6

TAI SOO KIM PARTNERS TAI SOO KIM 146 Wyllys Street Hartford, Connecticut Tel: (860) 547-1970 Fax: (860) 249-0695	JOB NAME/NUMBER H.C. WILCOX TECHNICAL HIGH SCHOOL/BI-RT-843 SCALE: 1/8" = 1'-0" DATE: 08/27/2010	TITLE FIRST FLOOR PLAN AREA B & C	DRAWING NO. SKA-15

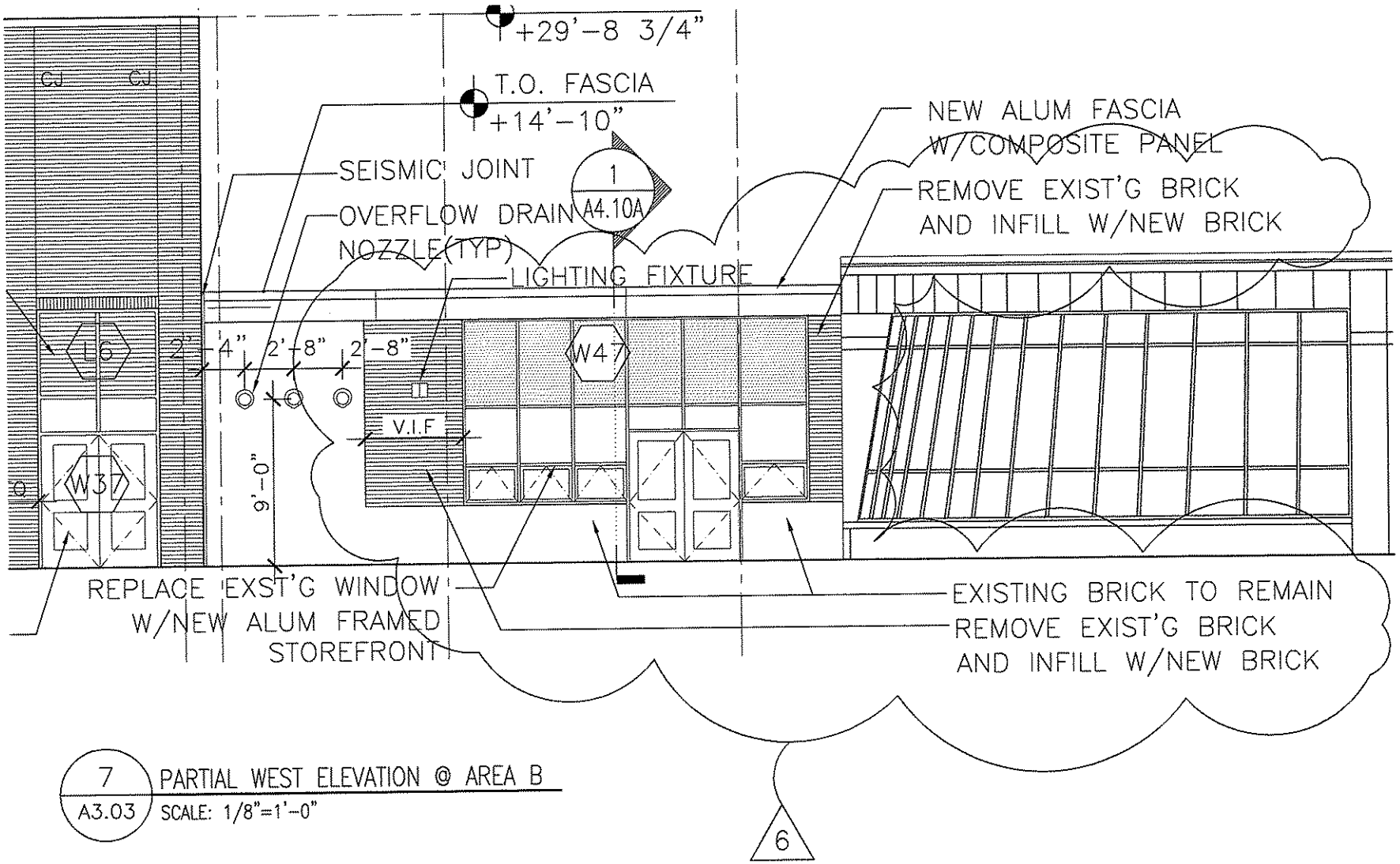

7 / A3.03 PARTIAL WEST ELEVATION @ AREA B

SCALE: 1/8"=1'-0"

REFERENCE SHEET: AS SHOWN
REFERENCE ADDENDUM: #6

DRAWING NO.
SKA-15A

TITLE
EXTERIOR ELEVATIONS

JOB NAME/NUMBER
H.C. WILCOX TECHNICAL HIGH SCHOOL/BI-RT-843

SCALE:
AS SHOWN

DATE:
08/27/2010

TAI SOO KIM PARTNERS
TAI SOO KIM
146 Wyllys Street
Hartford, Connecticut
Tel: (860) 547-1970
Fax: (860) 249-0695

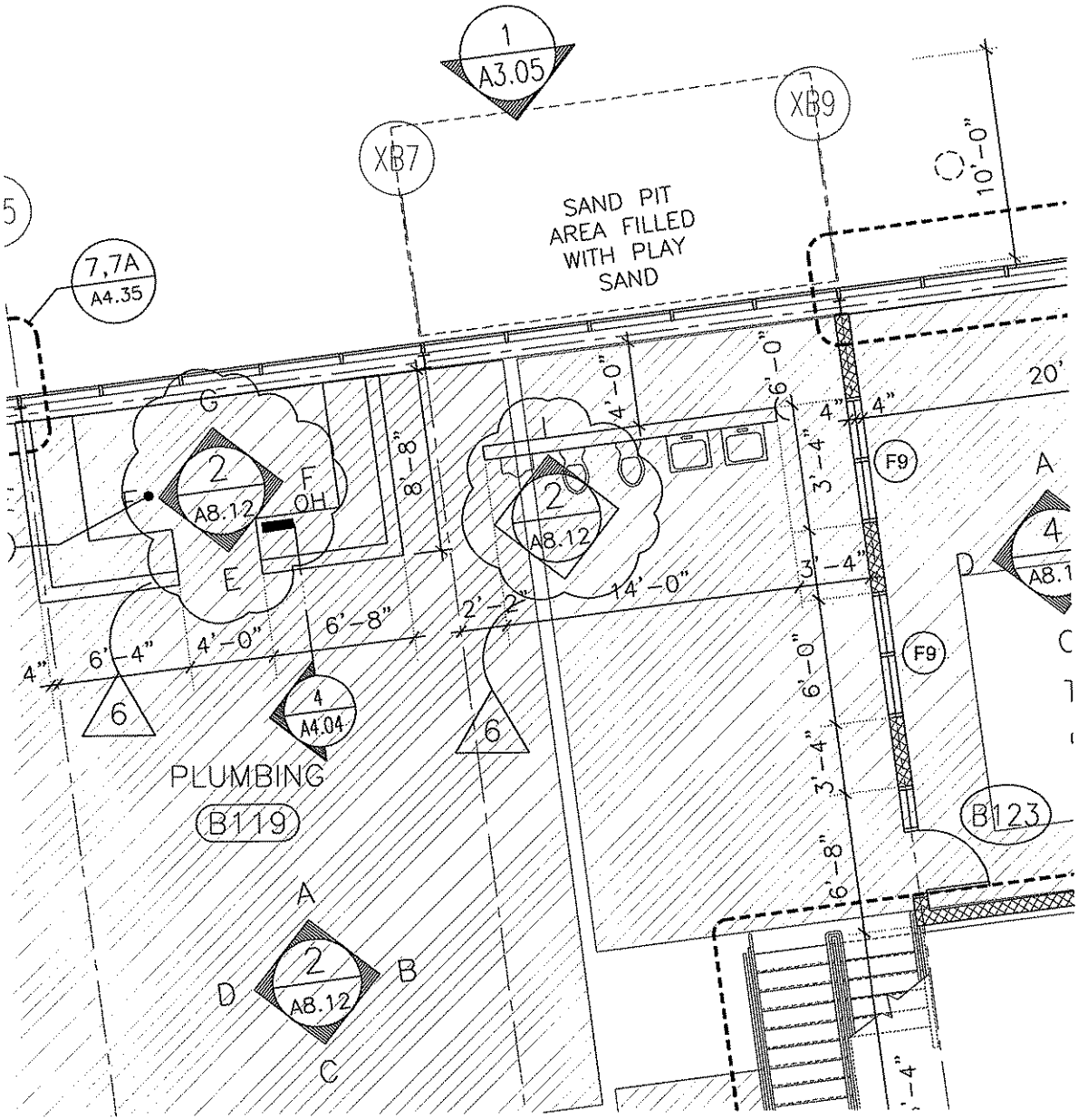

REFERENCE SHEET: 1/A1.03
REFERENCE ADDENDUM: #6

TAI SOO KIM PARTNERS TAI SOO KIM 146 Wyllys Street Hartford, Connecticut Tel: (860) 547-1970 Fax: (860) 249-0695	JOB NAME/NUMBER H.C. WILCOX TECHNICAL HIGH SCHOOL/BI-RT-843 SCALE: 1/8" = 1'-0" DATE: 08/27/2010	TITLE FIRST FLOOR PLAN AREA B & C	DRAWING NO. SKA-16

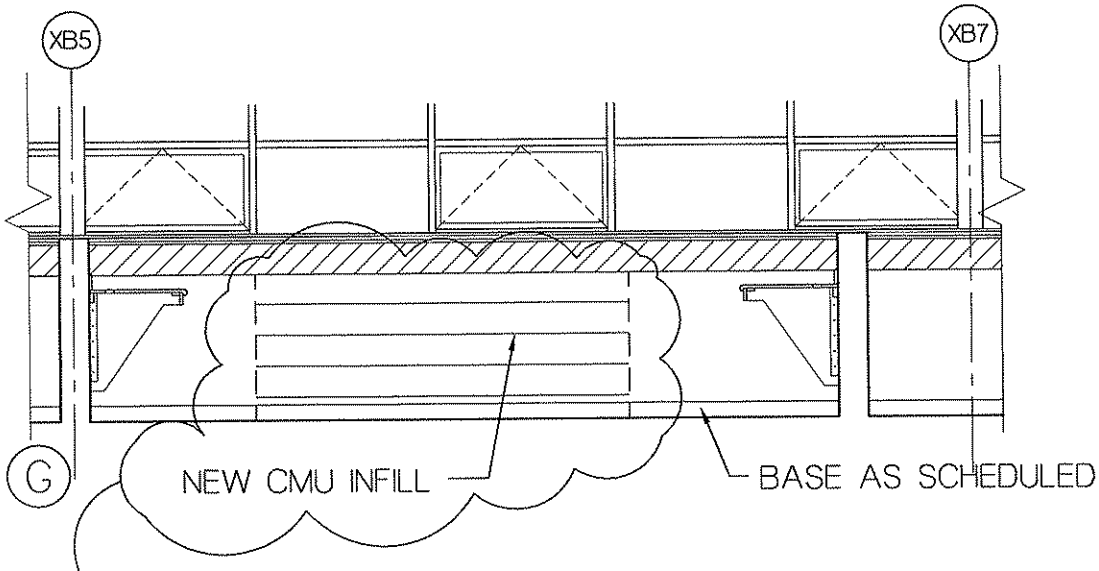

2 / A8.12 INTERIOR ELEVATION @ OFFICE B122
SCALE: 1/4"=1'-0"

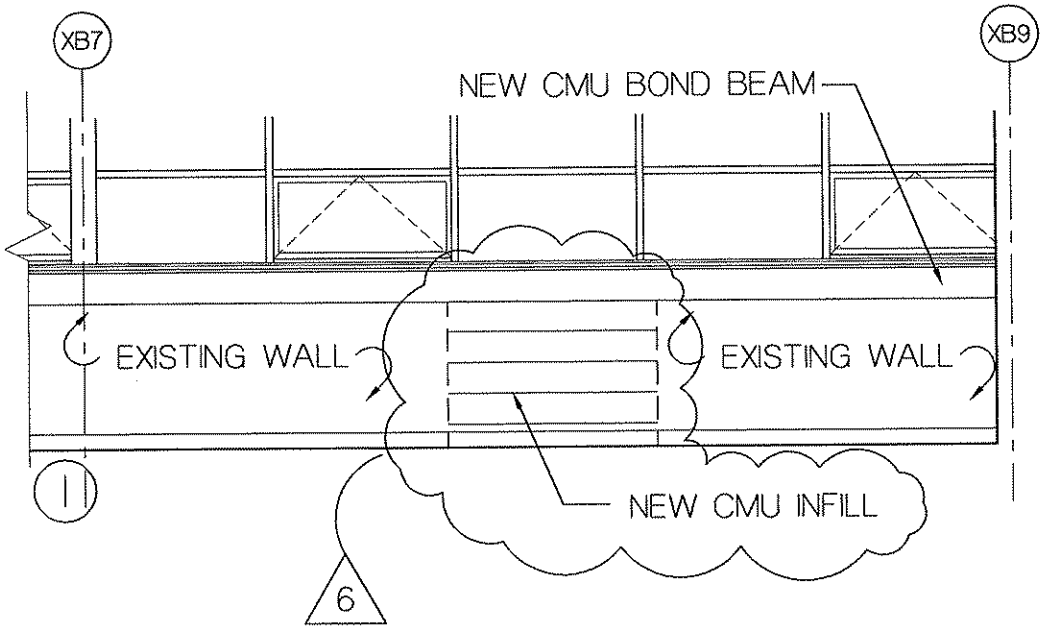

2 / A8.12 INTERIOR ELEVATION @ PLUMBING B119
SCALE: 1/4"=1'-0"

REFERENCE SHEET: AS SHOWN
REFERENCE ADDENDUM: #6

TAI SOO KIM PARTNERS 146 Wyllys Street Hartford, Connecticut Tel: (860) 547-1970 Fax: (860) 249-0695	JOB NAME/NUMBER H.C. WILCOX TECHNICAL HIGH SCHOOL/BI-RT-843 SCALE: AS SHOWN DATE: 08/27/2010	TITLE INTERIOR ELEVATIONS	DRAWING NO. SKA-16A

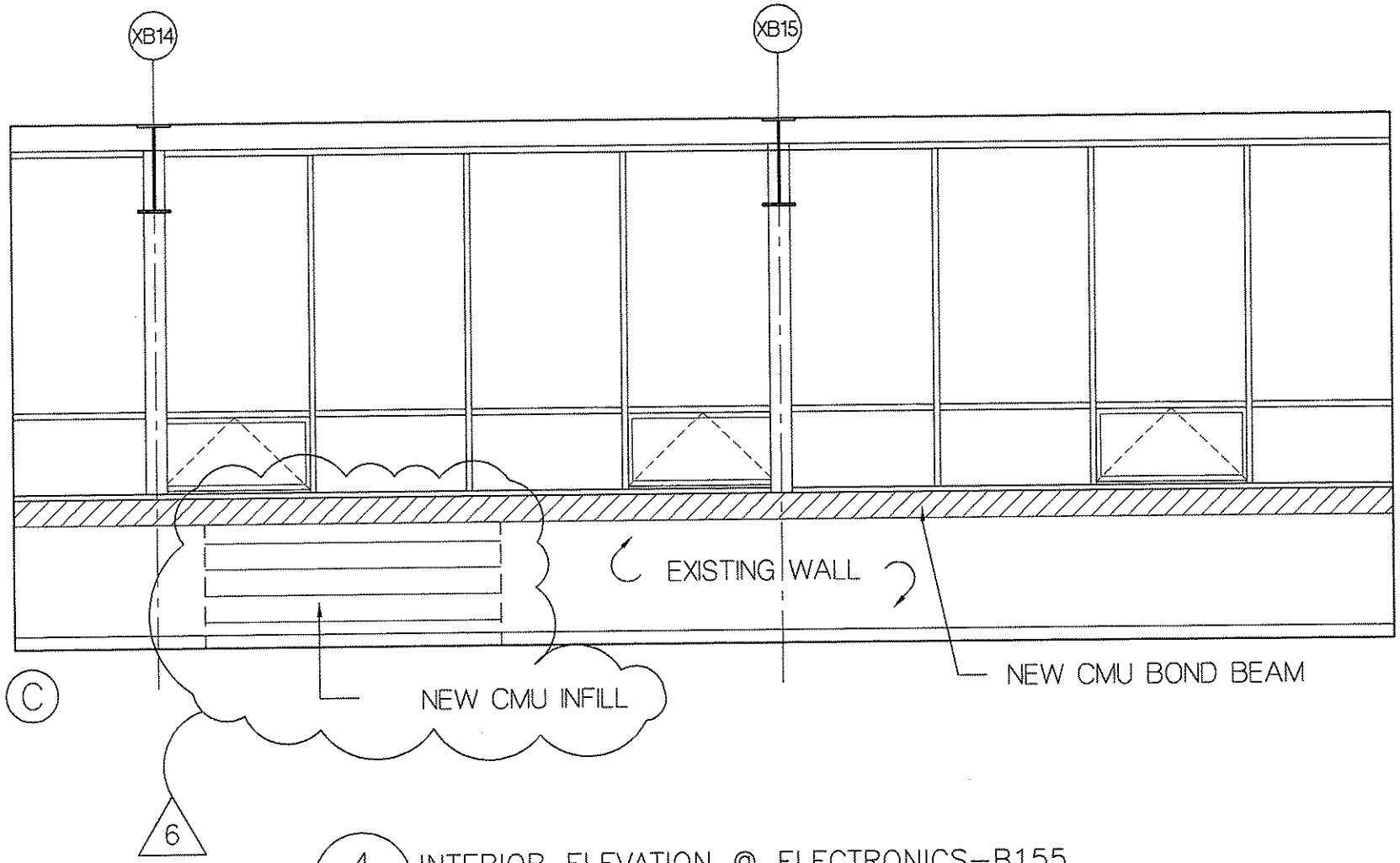

4 / A8.13 INTERIOR ELEVATION @ ELECTRONICS-B155
SCALE: 1/4"=1'-0"

REFERENCE SHEET: AS SHOWN
REFERENCE ADDENDUM: #6

DRAWING NO. SKA-17

TITLE INTERIOR ELEVATION

JOB NAME/NUMBER H.C. WILCOX TECHNICAL HIGH SCHOOL/BI-RT-843

SCALE: AS SHOWN

DATE: 08/27/2010

TAI SOO KIM PARTNERS
TAI SOO KIM
146 Wyllys Street
Hartford, Connecticut
Tel: (860) 547-1970
Fax: (860) 249-0695

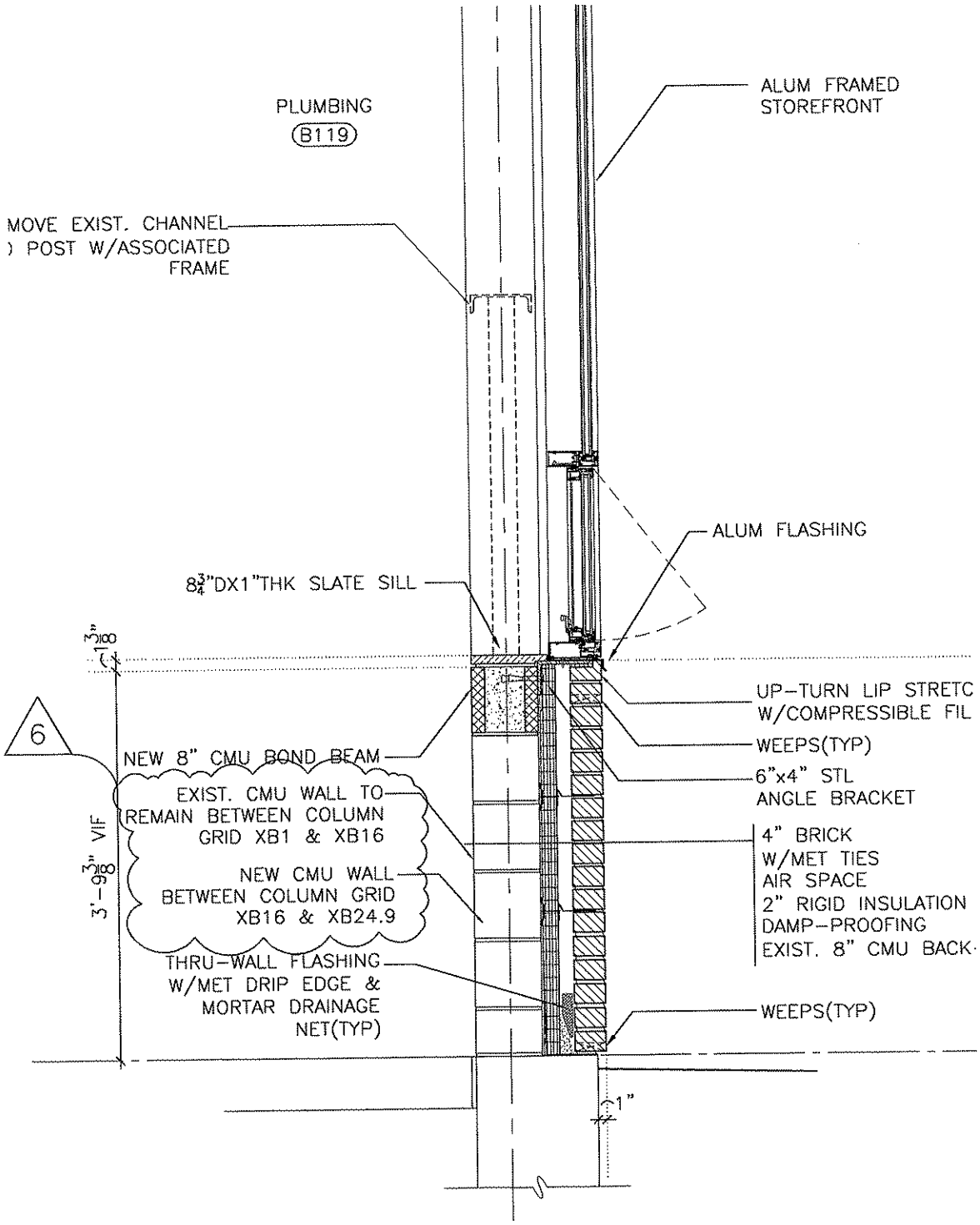

REFERENCE SHEET: 1/A4.10
REFERENCE ADDENDUM: #6

TAI SOO KIM PARTNERS 146 Wyllys Street Hartford, Connecticut Tel: (860) 547-1970 Fax: (860) 249-0695	JOB NAME/NUMBER H.C. WILCOX TECHNICAL HIGH SCHOOL/BI-RT-843 SCALE: 3/4" = 1'-0" DATE: 08/27/2010	TITLE WALL SECTION	DRAWING NO. SKA-18

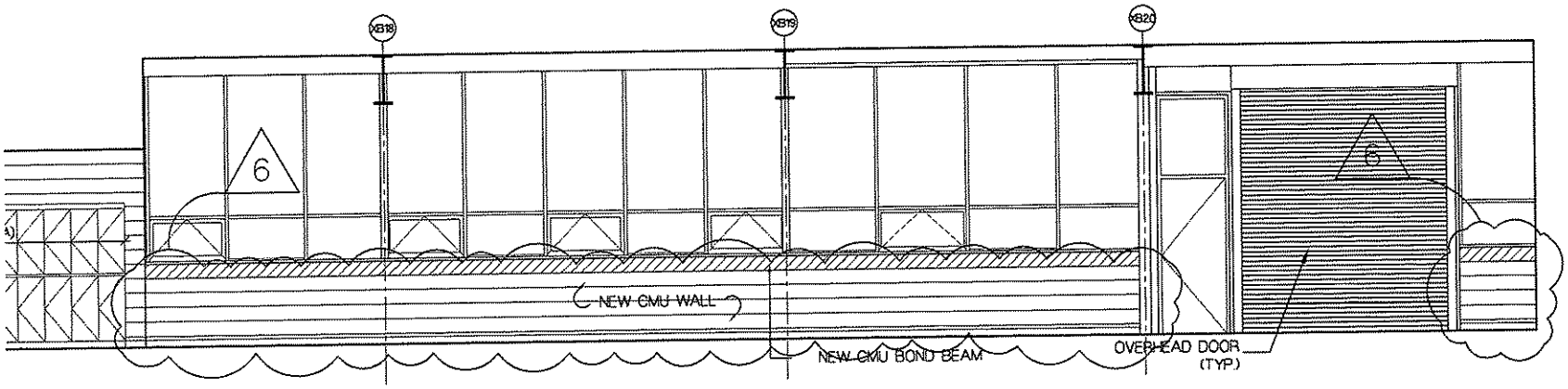

3 / A8.14 PARTIAL INT. ELEVATION @ CARPENTRY-B163
SCALE: 1/4"=1'-0"

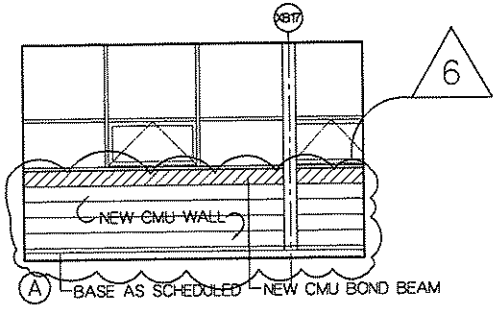

4 / A8.14 INT. ELEVATION @ OFFICE-B166
SCALE: 1/4"=1'-0"

REFERENCE SHEET: AS SHOWN
REFERENCE ADDENDUM: #6

DRAWING NO.
SKA-18A

TITLE
INTERIOR ELEVATIONS

JOB NAME/NUMBER
H.C. WILCOX TECHNICAL HIGH SCHOOL/BI-RT-843

SCALE:
AS SHOWN

DATE:
08/27/2010

TAI SOO KIM PARTNERS
TAI SOO KIM
146 Wyllys Street
Hartford, Connecticut
Tel: (860) 547-1970
Fax: (860) 249-0695

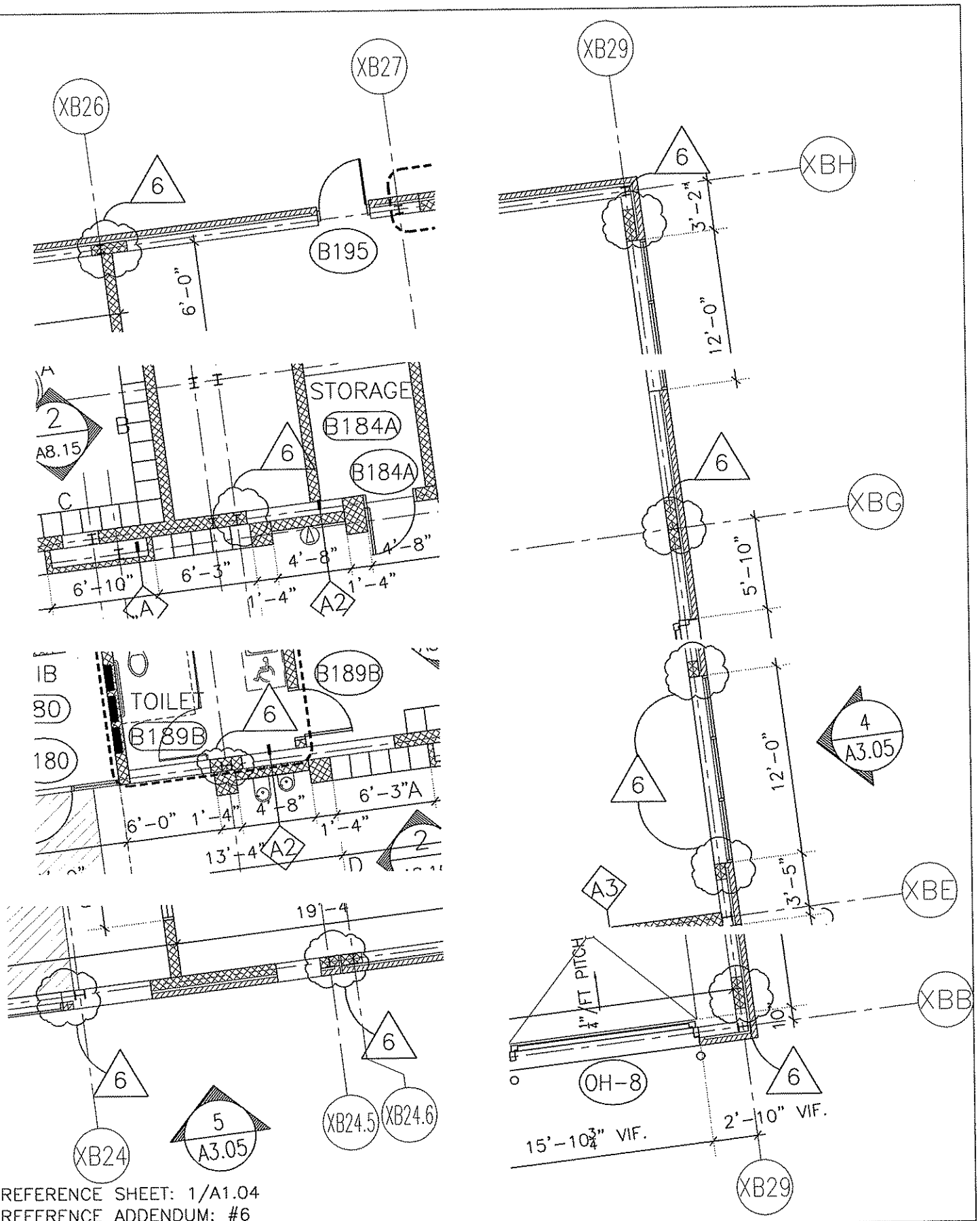

REFERENCE SHEET: 1/A1.04
REFERENCE ADDENDUM: #6

TAI SOO KIM PARTNERS 146 Wyllys Street Hartford, Connecticut Tel: (860) 547-1970 Fax: (860) 249-0695	JOB NAME/NUMBER H.C. WILCOX TECHNICAL HIGH SCHOOL/BI-RT-843 SCALE: 1/8" = 1'-0" DATE: 08/27/2010	TITLE FIRST FLOOR PLAN AREA "B" & "C"	DRAWING NO. SKA-19

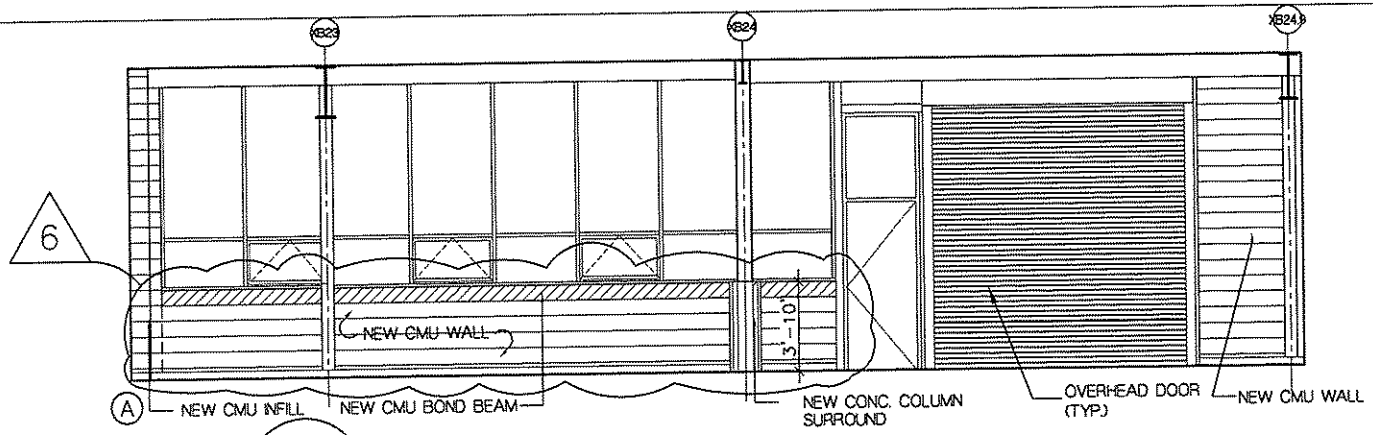

1 / A8.15 INT. ELEVATION @ FRESHMAN LAB - B186
SCALE: 1/8"=1'-0"

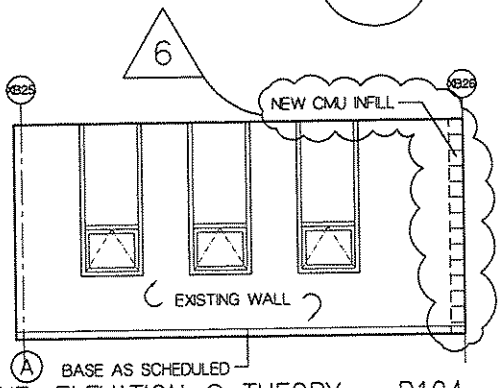

3 / A8.15 INT. ELEVATION @ THEORY - B194
SCALE: 1/8"=1'-0"

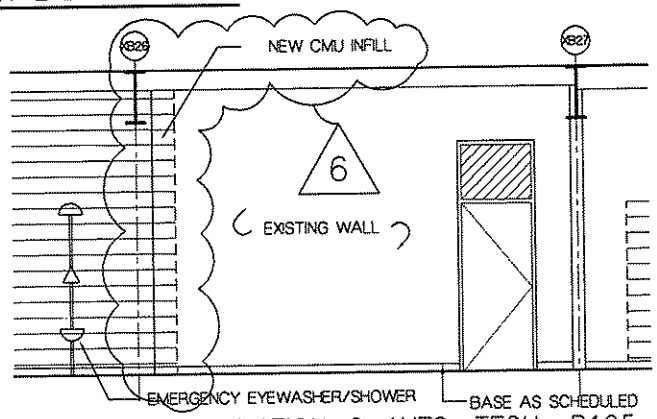

4 / A8.15 PARTIAL INT. ELEVATION @ AUTO. TECH.-B195
SCALE: 1/8"=1'-0"

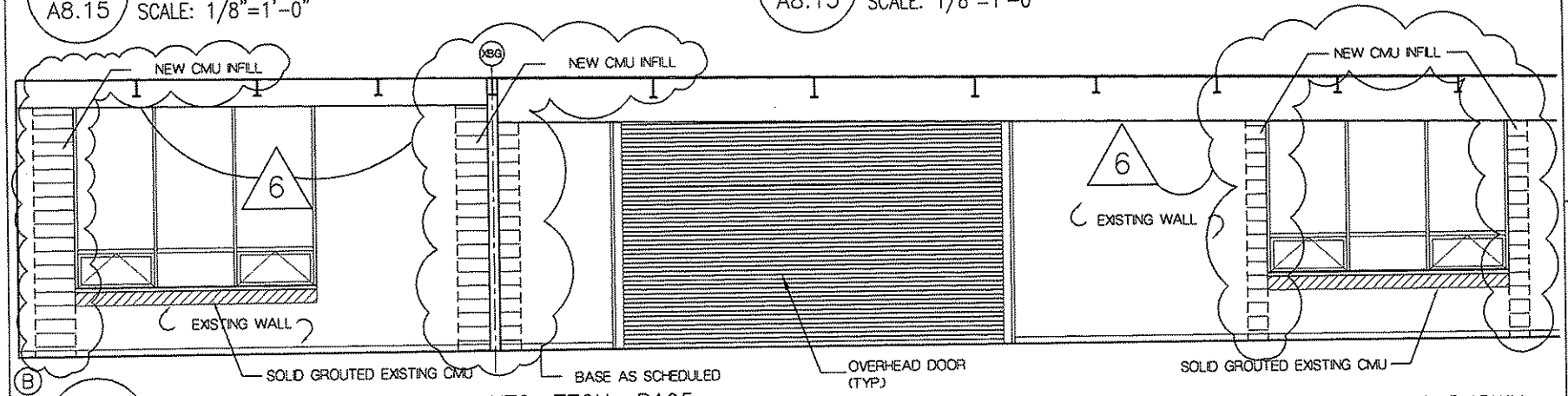

5 / A8.15 PARTIAL INT. ELEVATION @ AUTO. TECH.-B195
SCALE: 1/8"=1'-0"

REFERENCE SHEET: AS SHOWN
REFERENCE ADDENDUM: #6

DRAWING NO. SKA-19A

TITLE INTERIOR ELEVATIONS

JOB NAME/NUMBER H.C. WILCOX TECHNICAL HIGH SCHOOL/BI-RT-843

SCALE: AS SHOWN

DATE: 08/27/2010

TAI SOO KIM PARTNERS
146 Wyllys Street
Hartford, Connecticut
Tel: (860) 547-1970
Fax: (860) 249-0695

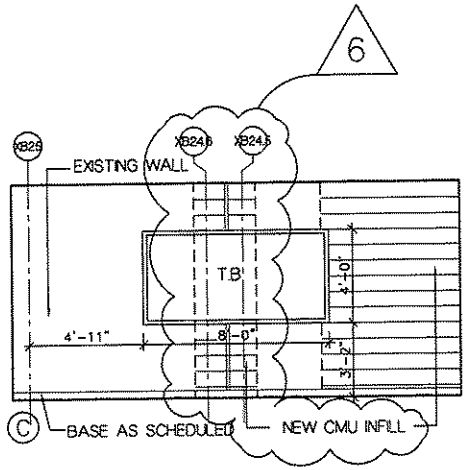

3 / 8.16 INT. ELEVATION @ THEORY-B183
SCALE: 1/8"=1'-0"

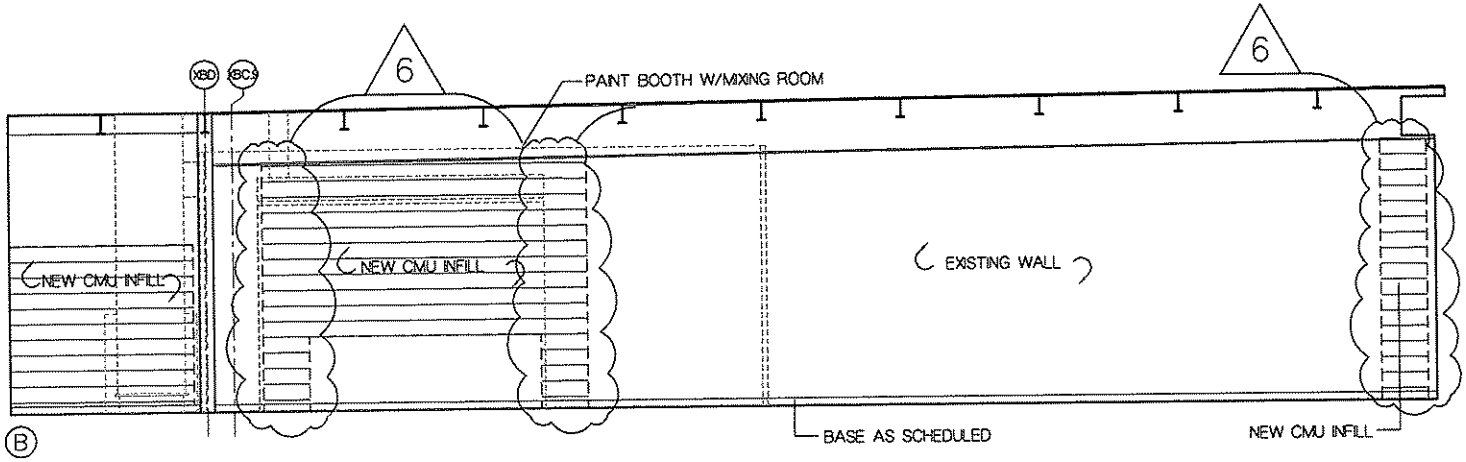

5 / 8.16 INT. ELEVATION @ COLLISION REPAIR-B184
SCALE: 1/8"=1'-0"

REFERENCE SHEET: AS SHOWN
REFERENCE ADDENDUM: #6

DRAWING NO.
SKA-19B

TITLE
INTERIOR ELEVATIONS

JOB NAME/NUMBER
H.C. WILCOX TECHNICAL HIGH SCHOOL/BI-RT-843

SCALE:
AS SHOWN

DATE:
08/27/2010

TAI SOO KIM PARTNERS
TAI SOO KIM
146 Wyllys Street
Hartford, Connecticut
Tel: (860) 547-1970
Fax: (860) 249-0695

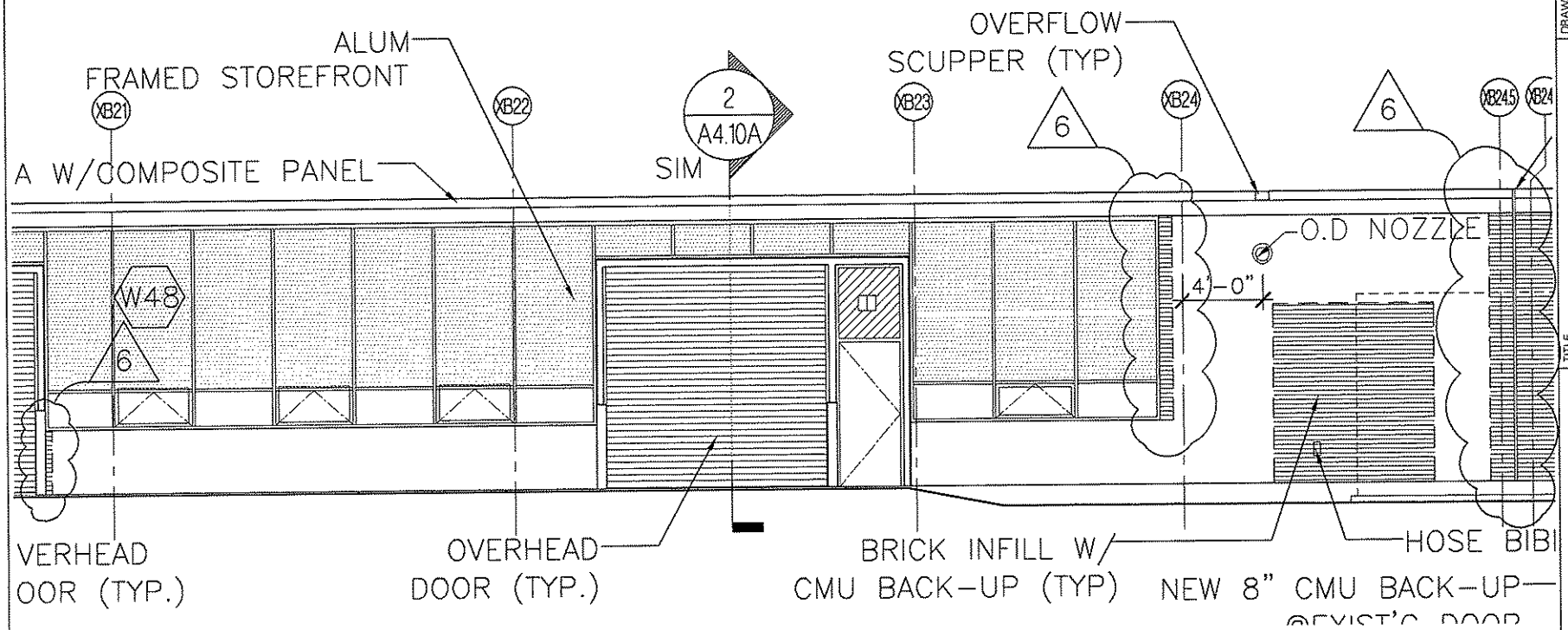

5 / A3.05 PARTIAL EXTERIOR ELEVATION
SCALE: 1/8"=1'-0"

REFERENCE SHEET: AS SHOWN
REFERENCE ADDENDUM: #6

DRAWING NO.
SKA-19C

TITLE
EXTERIOR ELEVATION

JOB NAME/NUMBER
H.C. WILCOX TECHNICAL HIGH SCHOOL/BI-RT-843

SCALE:
AS SHOWN

DATE:
08/27/2010

TAI SOO KIM PARTNERS
TAI SOO KIM
146 Wyllys Street
Hartford, Connecticut
Tel: (860) 547-1970
Fax: (860) 249-0695

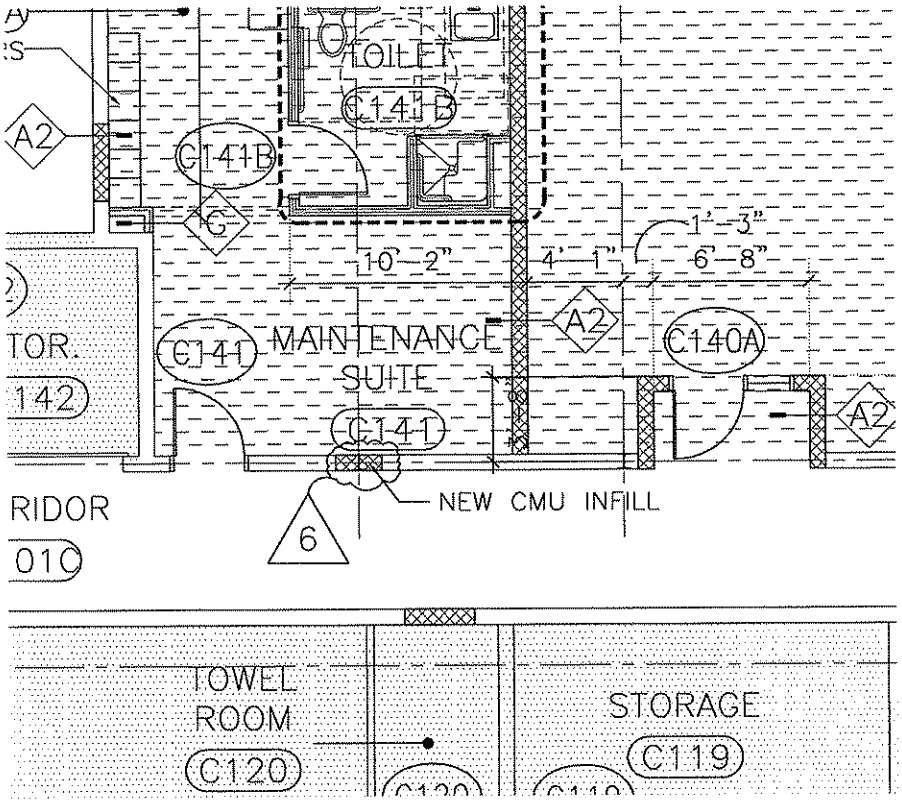

REFERENCE SHEET: 1/A1.05
REFERENCE ADDENDUM: #6

TAI SOO KIM PARTNERS 146 Wyllys Street Hartford, Connecticut Tel: (860) 547-1970 Fax: (860) 249-0695	JOB NAME/NUMBER H.C. WILCOX TECHNICAL HIGH SCHOOL/BI-RT-843 SCALE: 1/8" = 1'-0" DATE: 08/24/2010	TITLE FIRST FLOOR PLAN AREA "C"	DRAWING NO. SKA-20

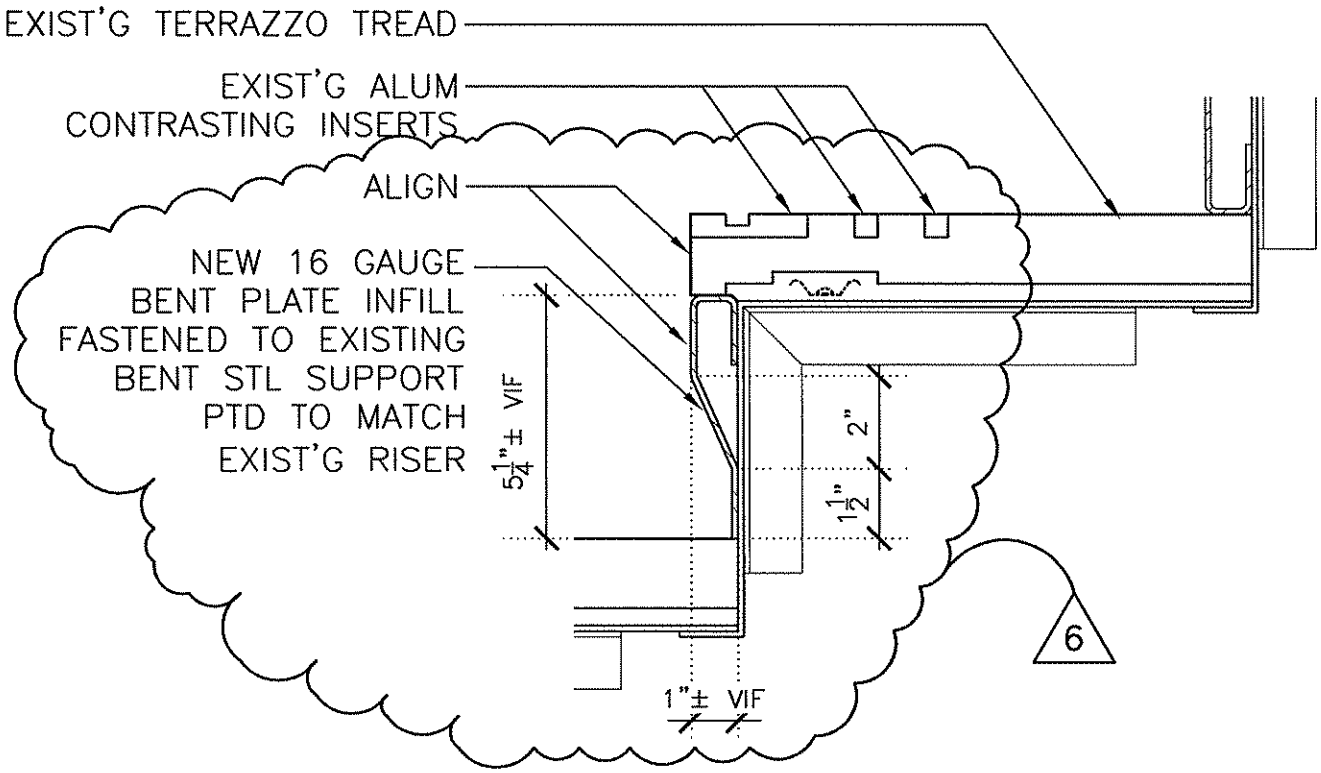

6A TYPICAL RISER DETAIL @ STAIR A1 & A2

SCALE: 3"=1'-0"

REFERENCE SHEET: 6A/A6.04
REFERENCE ADDENDUM: #6

TAI SOO KIM PARTNERS 146 Wyllys Street Hartford, Connecticut Tel: (860) 547-1970 Fax: (860) 249-0695	JOB NAME/NUMBER H.C. WILCOX TECHNICAL HIGH SCHOOL/BI-RT-843 SCALE: AS INDICATED DATE: 08/27/2010	TITLE STAIR DETAILS	DRAWING NO. SKA-21

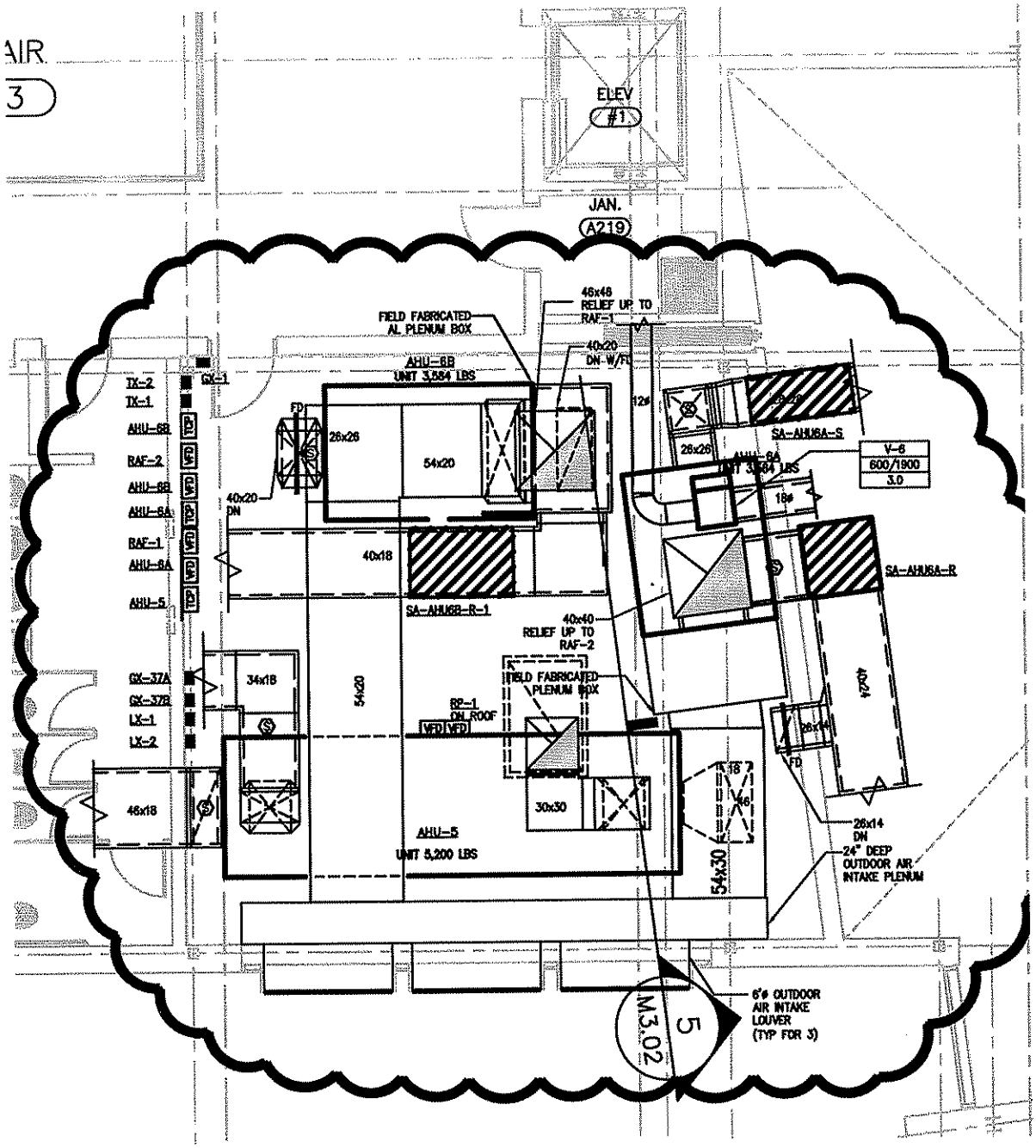

2 M3.02 MECHANICAL ROOM – SECOND FLOOR AREA "A"
SCALE: 1/8"=1'-0"

KOHLER RONAN, LLC
CONSULTING ENGINEERS
301 Main Street, Danbury, CT 06810
203.778.1017 F 203.778.1018
1370 Broadway, New York, NY 10018
212.695.2422 F 212.695.2423
www.kohlerronan.com
E-mail krce@kohlerronan.com

6 08/27/10 – ADDENDUM #6

PROJECT HC WILCOX/BI-RT-843 SKETCH NUMBER SKM-082410-1

PROJECT NUMBER 0532 DATE 8/27/10 REVISION TO SHEET NUMBER M3.02

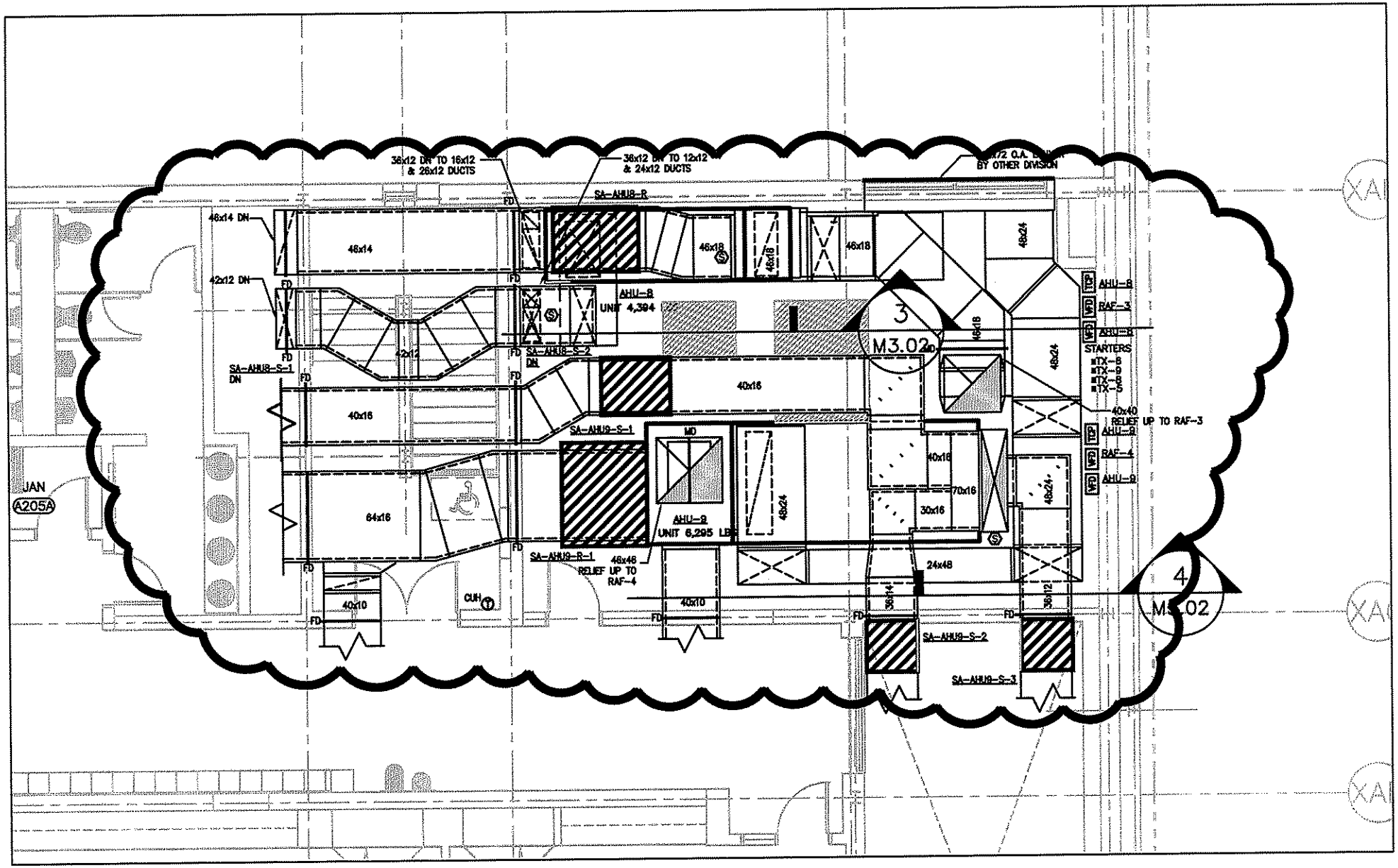

KOHLER RONAN, LLC
CONSULTING ENGINEERS

301 Main Street, Danbury, CT 06810
203.778.1017 F 203.778.1018

1370 Broadway, New York, NY 10018
212.695.2422 F 212.695.2423

www.kohlerronan.com
E-mail krce@kohlerronan.com

1 M3.02 MECHANICAL ROOM – SECOND FLOOR AREA "A"
SCALE: 1/4"=1'-0"

6 08/27/10 – ADDENDUM #6

PROJECT HC WILCOX/BI-RT-843 SKETCH NUMBER SKM-082410-2

PROJECT NUMBER 0532 DATE 08/27/10 REVISION TO SHEET NUMBER M3.02

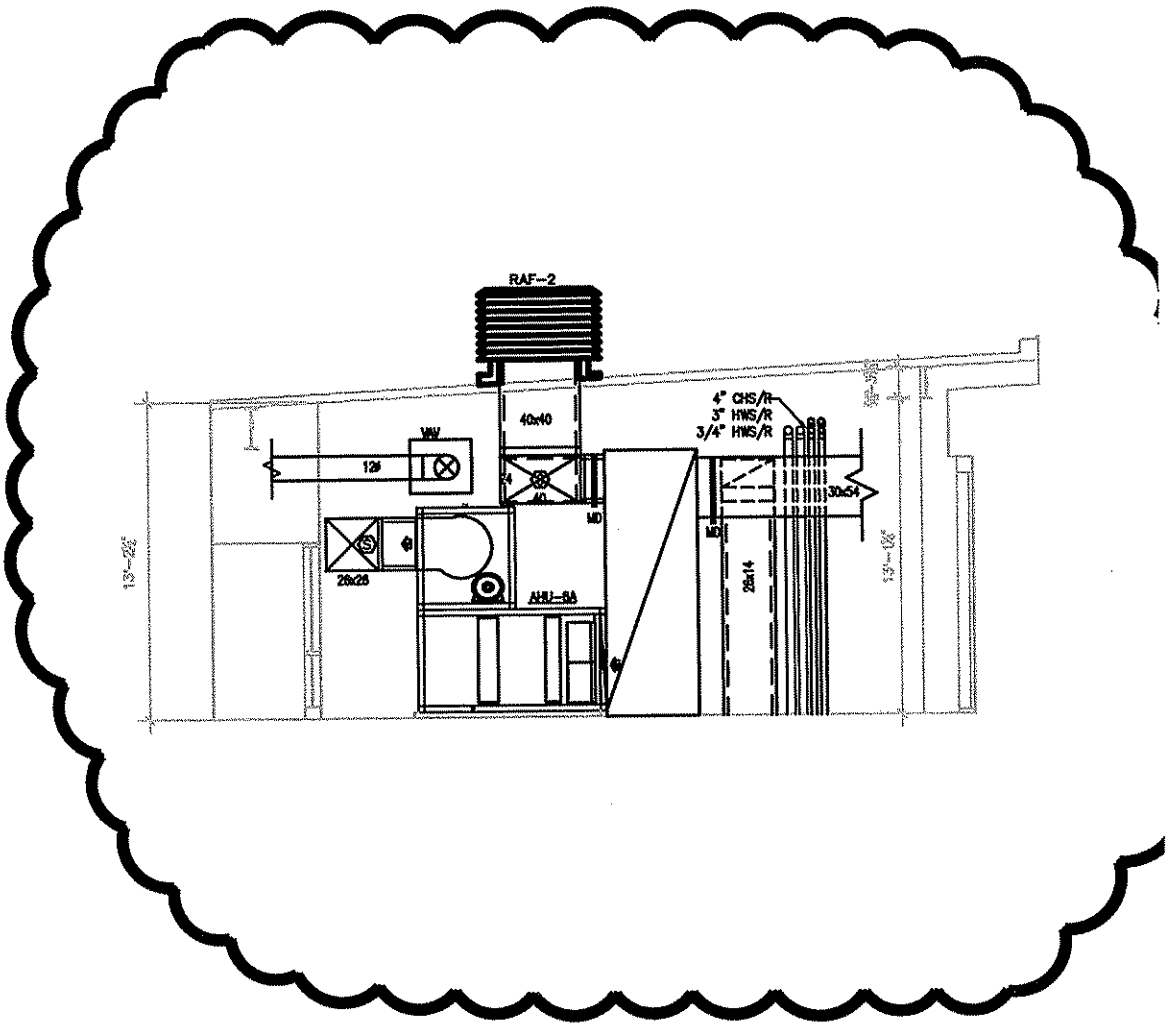

5 M3.02 MECHANICAL ROOM – SECOND FLOOR AREA "A" AHU-6A
SCALE: 1/8"=1'-0"

KOHLER RONAN, LLC
CONSULTING ENGINEERS
301 Main Street, Danbury, CT 06810
203.778.1017 F 203.778.1018
1370 Broadway, New York, NY 10018
212.695.2422 F 212.695.2423
www.kohlerronan.com
E-mail krce@kohlerronan.com

6 08/27/10 – ADDENDUM #6

PROJECT HC WILCOX/BI-RT-843 SKETCH NUMBER SKM-082410-3

PROJECT NUMBER 0532 DATE 8/27/10 REVISION TO SHEET NUMBER M3.02

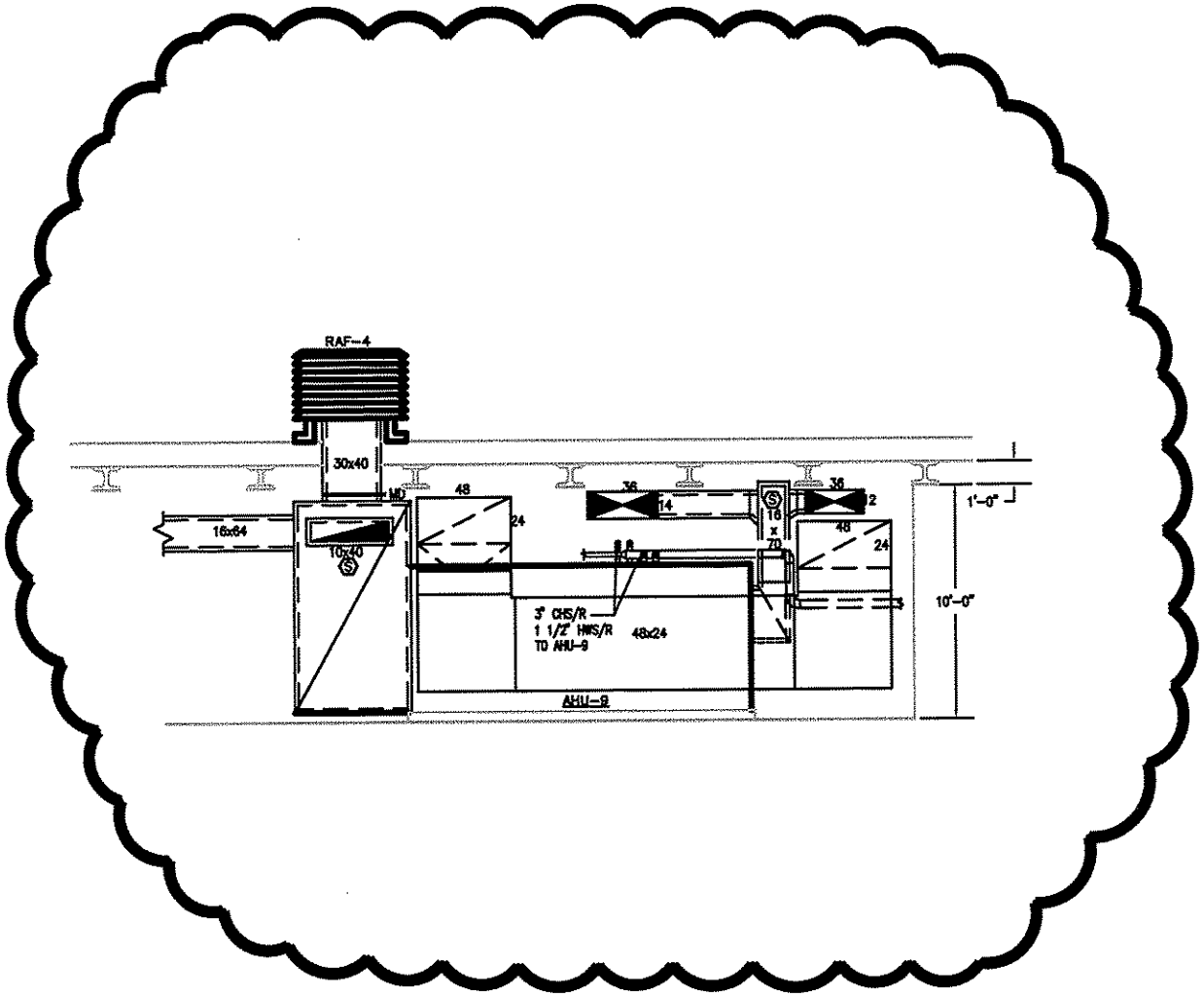

KOHLER RONAN, LLC
CONSULTING ENGINEERS
301 Main Street, Danbury, CT 06810
203.778.1017 F 203.778.1018
1370 Broadway, New York, NY 10018
212.695.2422 F 212.695.2423
www.kohlerronan.com
E-mail krce@kohlerronan.com

4 / M3.02 MECHANICAL ROOM – SECOND FLOOR AREA "A" AHU-9
SCALE: 1/8"=1'-0"

6 08/27/10 – ADDENDUM #6

PROJECT HC WILCOX/BI-RT-843 SKETCH NUMBER SKM-082410-4

PROJECT NUMBER 0532 DATE 08/27/10 REVISION TO SHEET NUMBER M3.02

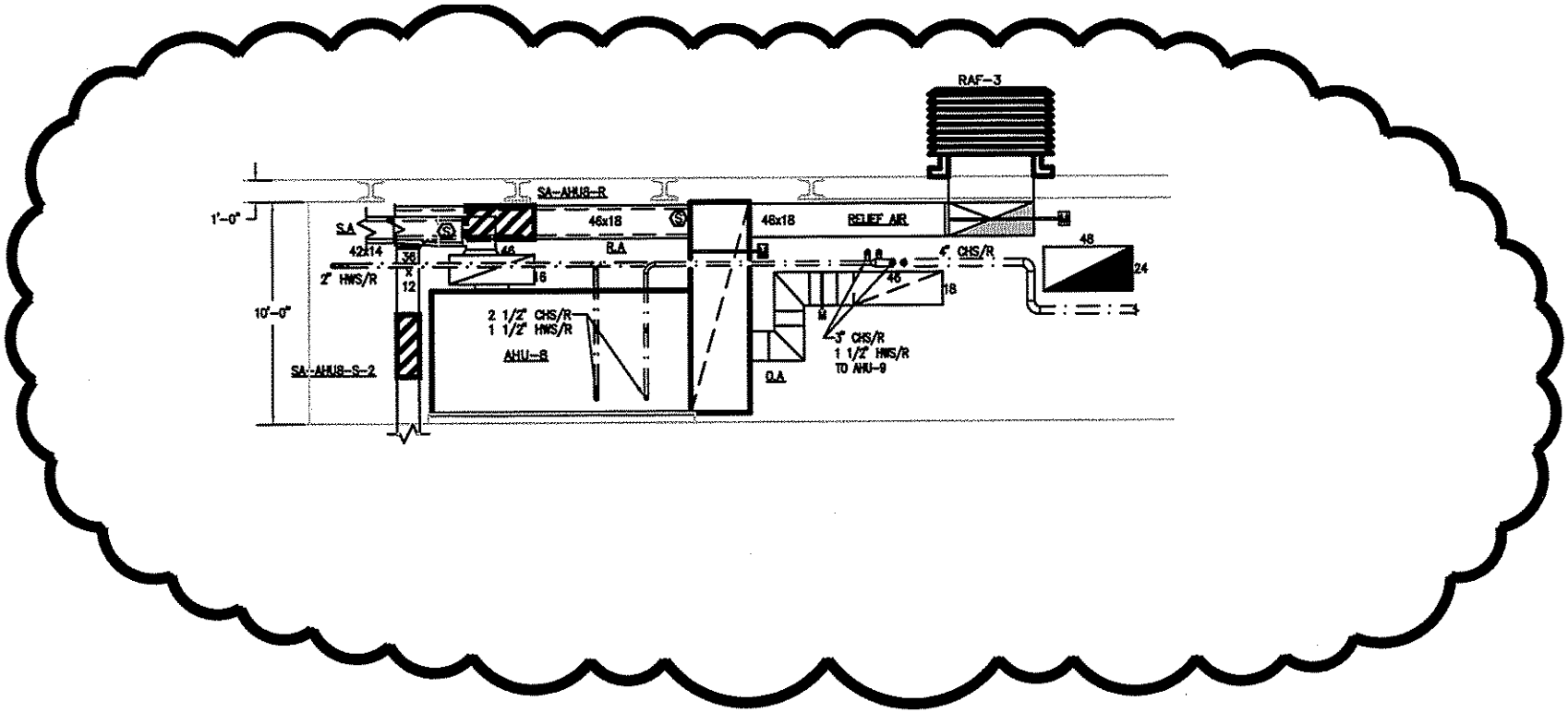

3 M3.02 MECHANICAL ROOM – SECOND FLOOR AREA "A" AHU-8
SCALE: 1/8"=1'-0"

KOHLER RONAN, LLC
CONSULTING ENGINEERS
301 Main Street, Danbury, CT 06810
203.778.1017 F 203.778.1018
1370 Broadway, New York, NY 10018
212.695.2422 F 212.695.2423
www.kohlerronan.com
E-mail krce@kohlerronan.com

6 08/27/10 – ADDENDUM #6

PROJECT HC WILCOX/BI-RT-843 SKETCH NUMBER SKM-082410-5

PROJECT NUMBER 0532 DATE 08/27/10 REVISION TO SHEET NUMBER M3.02

ADJUSTMENT PERPENDICULAR TO THE RUN OF PIPING SUPPORTED MAY BE MADE TO ACCOMMODATE DISPLACEMENT DUE TO EXPANSION. ALL SUCH HANGERS SHALL BE FINALLY ADJUSTED BOTH IN THE VERTICAL AND HORIZONTAL DIRECTION, AS REQUIRED. HANGERS IN CONTACT WITH COPPER OR BRASS PIPE SHALL BE DIELECTRIC, COMPATIBLE WITH COPPER AND BRASS ALLOY OR PROVIDED WITH FELT SLEEVE.

3. PROVIDE ADDITIONAL SUPPORT FOR DUCTWORK PIPING AND EQUIPMENT WHEN DECK IS NOT CAPABLE OF SUPPORT.

4. BEAM CLAMPS – HANGERS SUPPORTED FROM STEEL SHALL BE CENTER LOADING BEAM CLAMPS FOR HANGERS SUPPORTING PIPING 2 INCHES. FOR PIPING 2–1/2 INCHES AND LARGER, I BEAM CLAMPS SHALL BE FORGED STEEL. "C" CLAMPS ARE NOT TO BE USED.

5. PROVIDE AND INSTALL EXPANSION COMPENSATION FOR ALL PIPING. SUBMIT PLANS, CALCULATIONS AND EQUIPMENT DATA.

ACOUSTICAL NOTES

1. PROVIDE 1–1/2" THICK INTERNAL GLASS FIBER DUCT LINING FOR ALL DUCTWORK INDICATED ON DRAWINGS AND IN SPECIFICATIONS.

2. PROVIDE 3' OF FLEXIBLE DUCT BETWEEN METAL DUCTS TO EACH DIFFUSER, REGISTER, & GRILLE.

3. LOCATE VOLUME DAMPERS 5' FROM TERMINAL DEVICES.

6

MEP PHASING DRAWING

SHEET NUMBER	DRAWING TITLE
PH.1MEPFP	PHASE 1 MEPFP FLOOR PLAN
PH.2MEPFP	PHASE 2 MEPFP FLOOR PLAN
PH.3MEPFP	PHASE 3 MEPFP FLOOR PLAN

KOHLER RONAN, LLC
CONSULTING ENGINEERS
301 Main Street, Danbury, CT 06810
203.778.1017 F 203.778.1018
1370 Broadway, New York, NY 10018
212.695.2422 F 212.695.2423
www.kohlerronan.com
E-mail krce@kohlerronan.com

6 08/27/10 – ADDENDUM #6

PROJECT HC WILCOX/BI-RT-843 SKETCH NUMBER SKM-082410-6

PROJECT NUMBER 0532 DATE 8/27/10 REVISION TO SHEET NUMBER M0.00

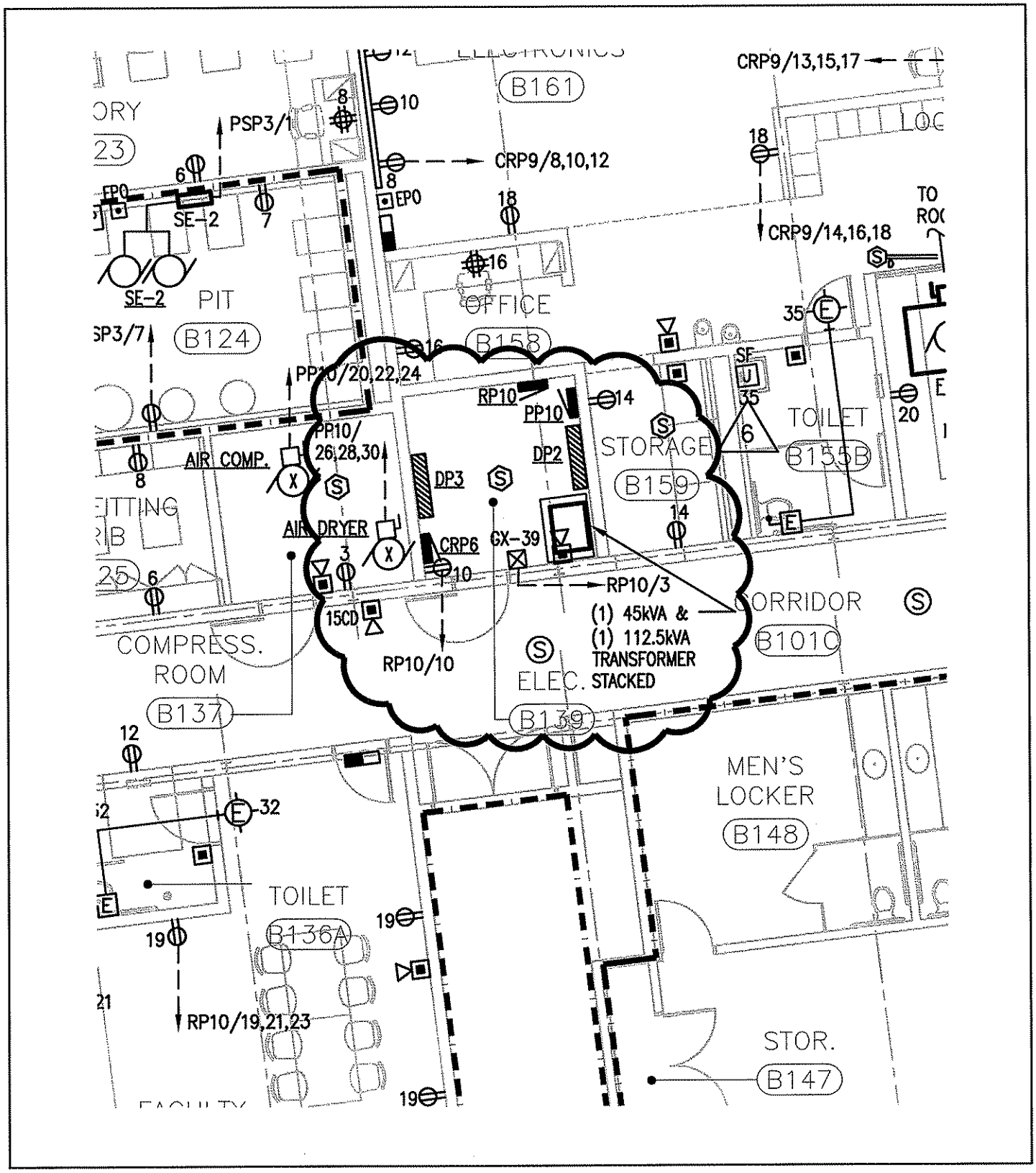

KOHLER RONAN, LLC
CONSULTING ENGINEERS

301 Main Street, Danbury, CT 06810
203.778.1017 F 203.778.1018

1370 Broadway, New York, NY 10018
212.695.2422 F 212.695.2423

www.kohlerronan.com
E-mail krce@kohlerronan.com

6 08/27/10 – ADDENDUM #6

PROJECT HC WILCOX/BI-RT-843 SKETCH NUMBER SKE-082410-1

PROJECT NUMBER 0532 DATE 8/27/10 REVISION TO SHEET NUMBER E1.03

LIGHTING FIXTU

TYPE	LAMP	VOLTAGE	MOUNTING	DESCRIPTION
A3	(6) 32W T8	277	CEILING PENDANT	SAME AS TYPE "A1" EXCEPT DIMMING BALLAST FOR DAY LIGHTING CONTROL – CORELITE # IP–WP–2T8–1C–277–AC**–MOD (DIMMING BALLAST)
A4	(4) 32W T8	277	CEILING SURFACE	8 FT. DIRECT FLUORESCENT FIXTURE WITH ALUMINUM BLADE BAFFLE, PERFORATED SIDERAIL AND WHITE FINISH – CORELITE # S2–WB–2T8–1C–UNV–SU–JB–DL100
A5	(4) 32W T8	277	CEILING SURFACE	SAME AS TYPE "A4" EXCEPT DIMMING BALLAST FOR DAY LIGHTING CONTROL – CORELITE # S2–WB–2T8–1D–UNV–SU–JB–DL100
B	(4) 14W T5	277	CEILING RECESSED	24" DIA. FLUORESCENT FIXTURE W/ WHITE ACRYLIC DOME SHIELD – – MARK LIGHTING # MC–2–4–14T5–EB–277

6

KOHLER RONAN, LLC
CONSULTING ENGINEERS
301 Main Street, Danbury, CT 06810
203.778.1017 F 203.778.1018
1370 Broadway, New York, NY 10018
212.695.2422 F 212.695.2423
www.kohlerronan.com
E-mail krce@kohlerronan.com

6 08/27/10 – ADDENDUM #6

PROJECT HC WILCOX/BI–RT–843 SKETCH NUMBER SKE–082410–2

PROJECT NUMBER 0532 DATE 08/27/10 REVISION TO SHEET NUMBER E0.02

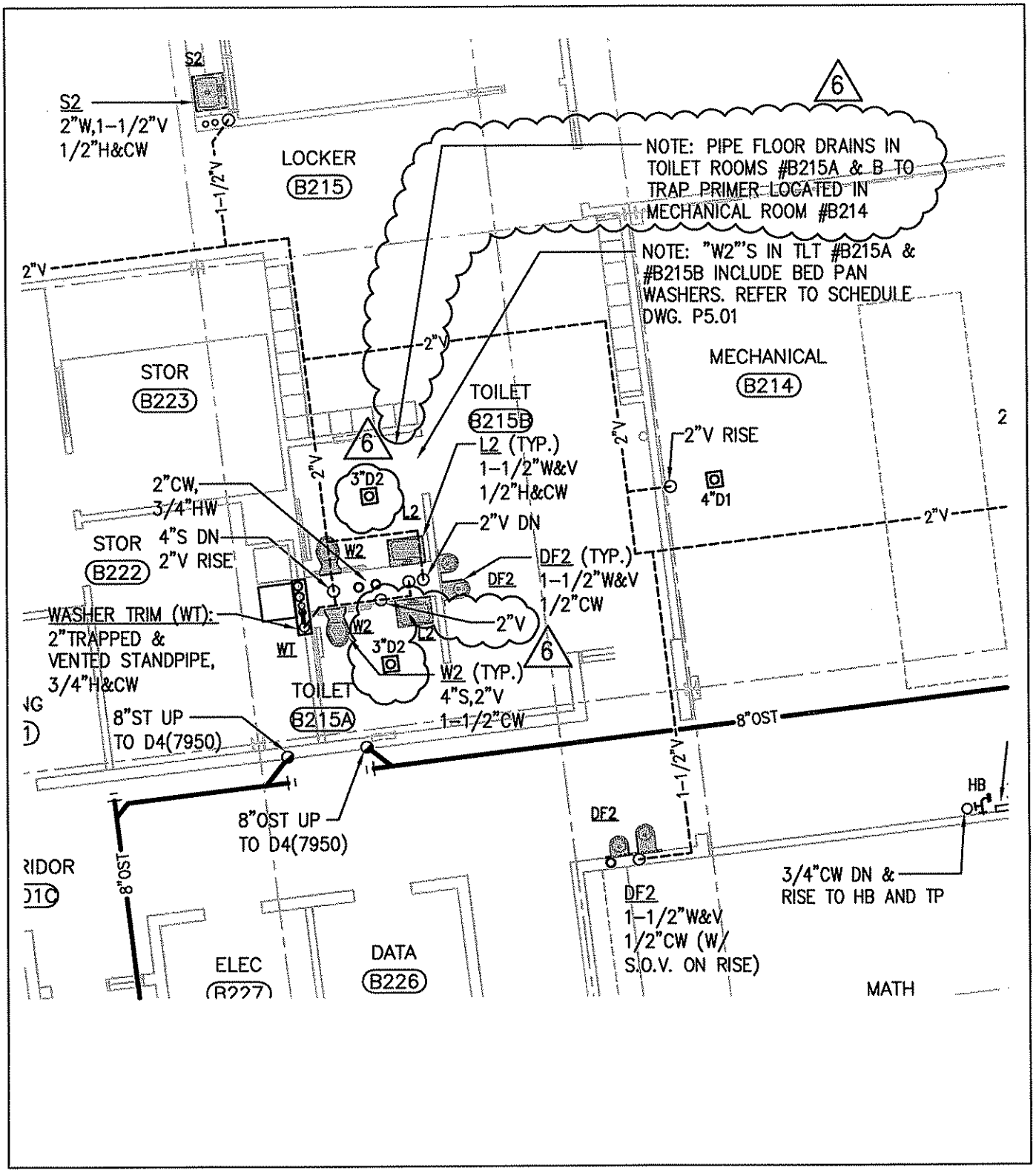

KOHLER RONAN, LLC
CONSULTING ENGINEERS
301 Main Street, Danbury, CT 06810
203.778.1017 F 203.778.1018
1370 Broadway, New York, NY 10016
212.695.2422 F 212.695.2423
www.kohlerronan.com
E-mail krce@kohlerronan.com

6 08/27/10 – ADDENDUM #6

PROJECT HC WILCOX/BI-RT-843 SKETCH NUMBER SKP-082710-1

PROJECT NUMBER 0532 DATE 08/27/10 REVISION TO SHEET NUMBER P1.08

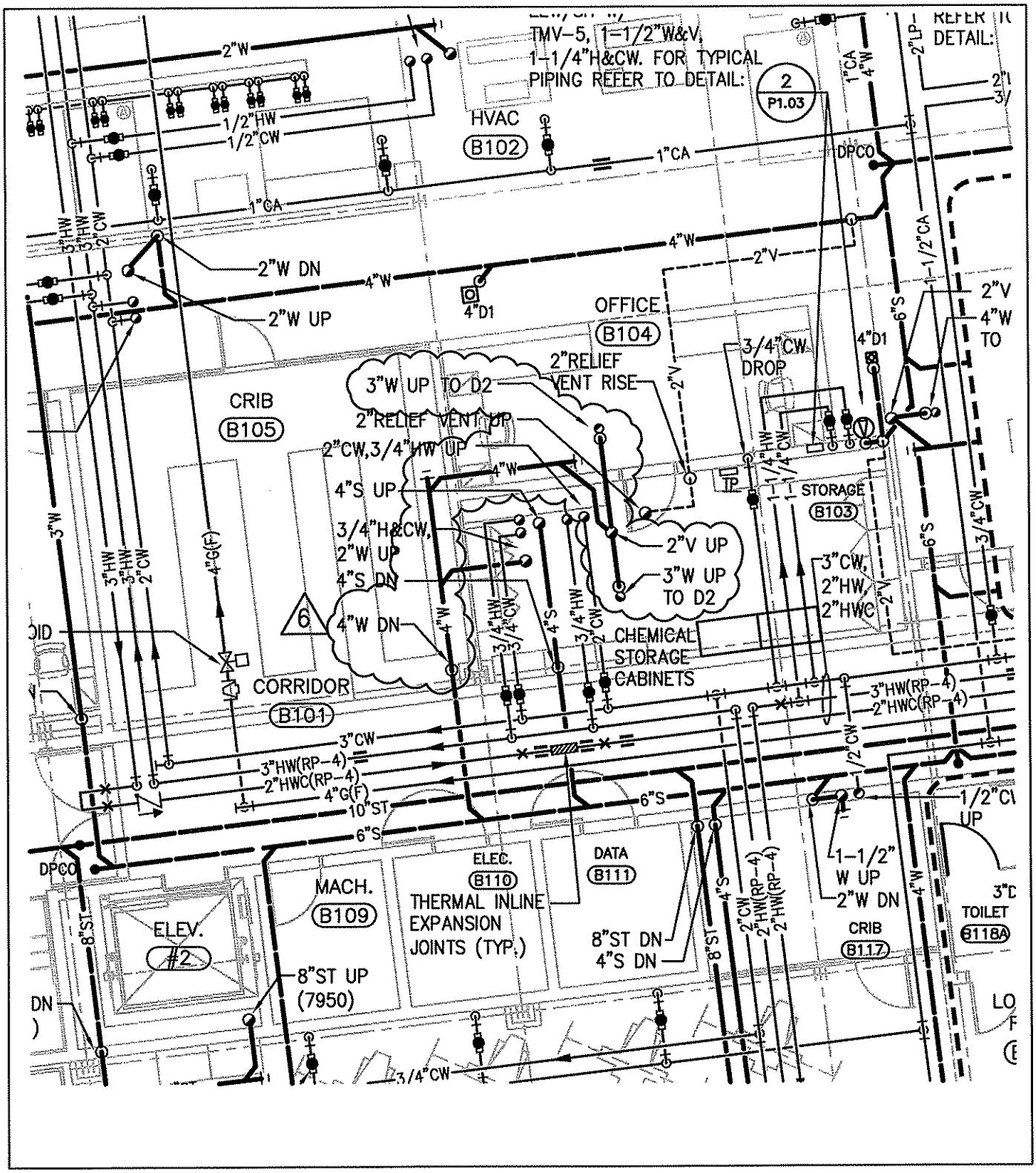

KOHLER RONAN, LLC
CONSULTING ENGINEERS
301 Main Street, Danbury, CT 06810
203.778.1017 F 203.778.1018
1370 Broadway, New York, NY 10018
212.695.2422 F 212.695.2423
www.kohlerronan.com
E-mail krce@kohlerronan.com

6 08/27/10 – ADDENDUM #6

PROJECT HC WILCOX/BI-RT-843 SKETCH NUMBER SKP-082710-2

PROJECT NUMBER 0532 DATE 8/2710 REVISION TO SHEET NUMBER P1.03

ASSOCIATED DISTRIBUTION SYSTEM PRIOR TO REMOVAL OF EXISTING GENERATOR.

H. CONTRACTOR SHALL PROVIDE ADDITIONAL FIRE ALARM IN THIS AREA TO ACCOMMODATE THE EXPANSION OF THE EXISTING FIRE SERVICE IN THIS AREA.

I. CONTRACTOR SHALL PROVIDE POWER AND TELECOMMUNICATIONS NECESSARY TO FIT OUT TEMPORARY ADMINISTRATION SPACE IN THE NEW LIBRARY.

J. COVER EXISTING EXIT LIGHT AT TEMP PARTITIONS. REMOVE COVER AFTER EXIT RESTORED WHERE APPLICABLE. PROVIDE TEMPORARY EXIT SIGNS TO REDIRECT EXIT TO NEW DIRECTION OF EGRESS.

K. ALL WORK WITHIN THESE ROOMS TO BE COMPLETED OVER A SUMMER PERIOD AS NOT TO REMOVE POWER TO BUILDING DURING OCCUPIED PERIODS. COORDINATE WORK TO REDUCE DOWNTIME.

L. INTERRUPT 480 VOLT, 400 AMP FEEDER IN THIS AREA AND EXTEND UP TO NEW ELECTRICAL ROOM ON FLOOR ABOVE. REMOVE AND RELOCATE TWO TRANSFORMERS FOR THE WING TO BE REMOVED AND INSTALL TEMPORARILY IN THE ELECTRICAL ROOM. RECONNECT 208 VOLT DISTRIBUTION TO EXISTING TO MAINTAIN POWER IN ADMINISTRATION.

M. HAIRDRESSING PANEL (400A, 208/3PH): PROVIDE TEMPORARY FEED FOR EXISTING ELECTRICAL SERVICE TO MAINTAIN POWER THROUGHOUT PHASE 1 AND 2 CONSTRUCTION. PERMANENT REFEED PROVIDED UNDER PHASE 3.

N. PROPOSED ROUTING OF SHOP CONDUITS.

O. REMOVE EXISTING EXIT SIGN AND PROVIDE NEW DIRECTING TO TEMPORARY EGRESS.

P. PROVIDE TEMPORARY POWER TO NEW EXHAUST FAN 120V/1PH 20 AMP CIRCUIT FOR LOCAL 120 VOLT PANEL REMAINING IN PHASE 3 AREA.

Q. RELOCATE EXISTING LIGHT SWITCH TO NEW TEMP DOOR LOCATION.

R. PROVIDE TEMP. EXIT SIGN

S. DISCONNECT AND RELOCATE EXISTING POWER ALONG THE WALL AND MOVE TO NEW TEMPORARY WALL. ADJUST LIGHTING AS REQUIRED.

T. ALL ELECTRICAL PANELS SHALL BE SUPPORTED ON UNISTRUT HUNG FROM ROOF STRUCTURE TO ALLOW FUTURE CONSTRUCTION OF PLUMBING PIT. AFTER PLUMBING PIT IS CONSTRUCTED PANELS SHALL BE PERMANENTLY SUPPORTED FROM FLOOR AND WALL. NOT THE ROOF.

6

KOHLER RONAN, LLC
CONSULTING ENGINEERS
301 Main Street, Danbury, CT 06810
203.778.1017 F 203.778.1018
1370 Broadway, New York, NY 10018
212.695.2422 F 212.695.2423
www.kohlerronan.com
E-mail krce@kohlerronan.com

6 08/27/10 – ADDENDUM #6

PROJECT HC WILCOX/BI-RT-843 SKETCH NUMBER SKPH1MEPFP-082410-1

PROJECT NUMBER 0532 DATE 8/27/10 REVISION TO SHEET NUMBER PH-1MEPFP

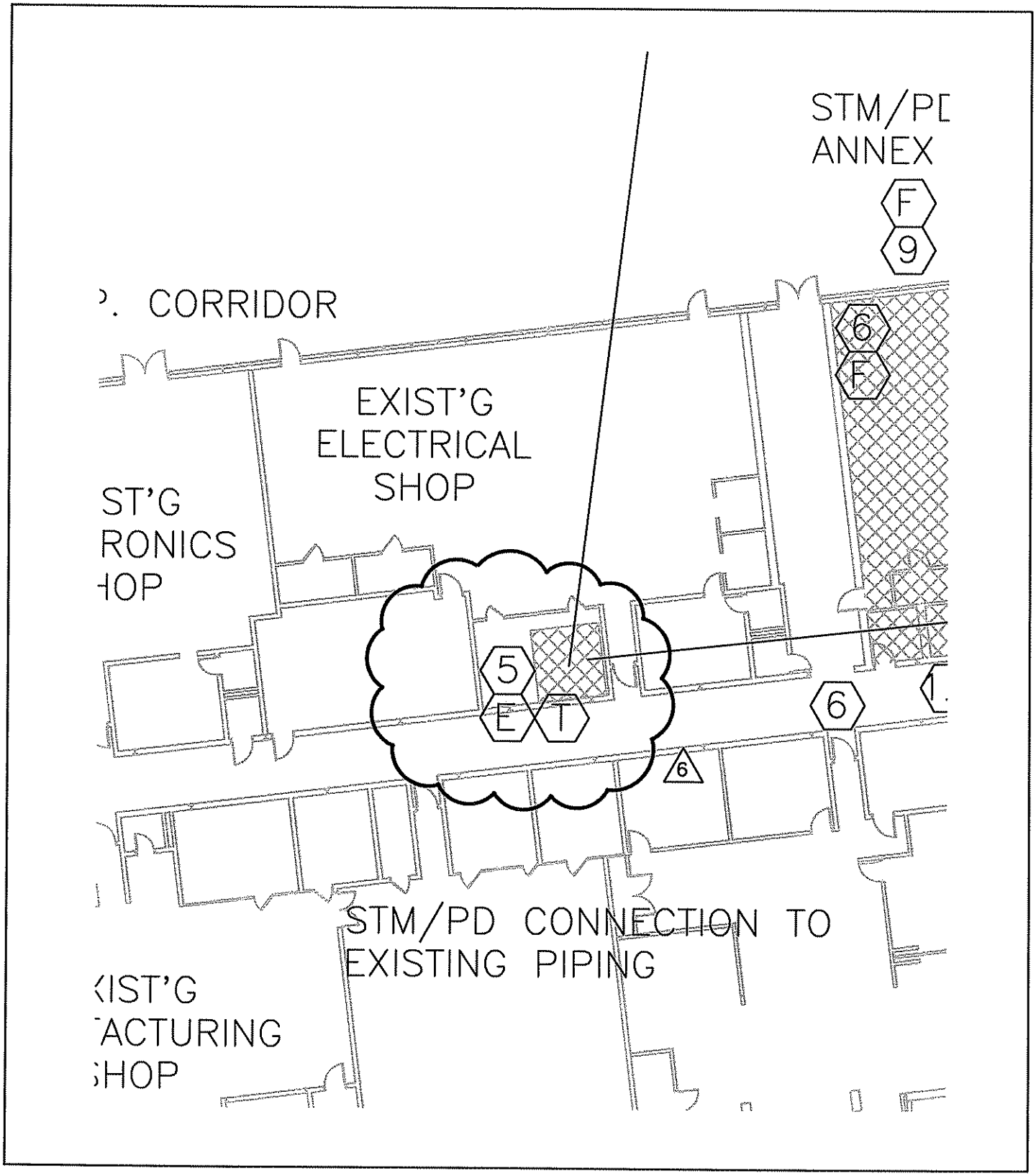

KOHLER RONAN, LLC
CONSULTING ENGINEERS
301 Main Street, Danbury, CT 06810
203.778.1017 F 203.778.1018
1370 Broadway, New York, NY 10018
212.695.2422 F 212.695.2423
www.kohlerronan.com
E-mail krce@kohlerronan.com

6 08/27/10 – ADDENDUM #6

PROJECT HC WILCOX/BI-RT-843 SKETCH NUMBER SKPH1MEPFP-082410-2

PROJECT NUMBER 0532 DATE 8/27/10 REVISION TO SHEET NUMBER PH-1MEPFP

RECORD OF ATTENDANCE 1 OF 5
PRE-BID CONFERENCE
ADDENDUM #6

State of Connecticut — Department of Public Works

PROJECT # & NAME: BI-RT-843 Additions & Renovations to H.C. Wilcox Technical High School, Meriden, CT
DATE/TIME/ROOM: Tuesday, August 10, 2010 10:00 AM Tiered Lecture Hall, Wilcox THS, Meriden, CT

PLEASE PRINT NEATLY

TIME IN		NAME/TITLE/COMPANY	ADDRESS & EMAIL ADDRESS		PHONE/FAX/CELL	TIME OUT
9:50	N	PAUL PRIOR	25 PINNEY ST	P	860 896-1000	11:25
	T	ESTIMATOR	ELLINGTON CT 06029	F	860 871-5982	
	C	BESTECH	PPRIOR@BESTECHCT.com	C	860 819 7707	
9:50	N	Scot Robert	50 Howe Ave	P	508-865-4040	
	T	Estimating	Millbury MA 01527	F	508-865-1123	
	C	Greenwood Ind	kyoung@greenwood-industries.com	C		
9:52	N	BRUCE GELBAR	112 WALL ST	P	860-496-4263	11:25
	T	SENIOR ESTIMATOR	TORRINGTON, CT 06790	F	860-496-4227	
	C	O & G INDUSTRIES	BRUCEGELBAR@OGIND.com	C		
9:55	N	Rob Croston	29 N. Plains Hwy	P	(203) 284-0102	11:30
	T	Sales Engineer	Wallingford CT.	F	(203) 284-0561	
	C	Automated Logic	rcroston@rcmscontrols.com	C	(203) 410-7247	
9:55	N	~~Keith Marcott~~	~~New Construction~~	P	~~860-621-6245~~	
	T			F		
	C			C		
9:55	N	Bruno CARUSO	815 Farmington Ave	P	860-832-9469	11:30
	T	V.P.	W.B. - CT - 06053	F	860-832-9470	
	C	CARUSO Electric	bruno caruso@comcast.net	C	860-883-7181	
	N	Peter Beltz	301 MAIN Street	P	203 775 1017	
	T	ENGR	DANBURY, CT	F	1015	
	C	Kohler Ronan	PBeltz@kohlerronan.com	C		
10:08	N	Jim Anderson	60 Dodge Ave	P	203-747-2115	
	T	Sales	North Haven CT	F	203-234-2013	
	C		JRAnderson@hbcommunications.com	C	203-530-3944	
	N	David Rosko	19 Cross Street	P	860-523-1918	
	T		Bristol, CT 06010	F	860-543-1021	
	C	modspace	David.Rosko@modspace.com	C	203-223-9601	
	N	Kent Westerbarth	19 Cross Street	P	860-589-8644	
	T		Bristol, CT 06010	F	860-585-7403	
	C	modspace	Kent.Westerbarth@modspace.com	C	860-962-2582	
	N	Bill Blythe	244 Prospect Ave	P	860 236-0833	
	T	Jr. Project manager	Hartford, CT 06106	F	860 233 3768	
	C	Kreisler Construction	WBlythe@kreislerconstruction.com	C	860 883 7844	
	N	~~Andrew Fosgerini~~	555 Long Wharf Drive	P	203-772-2451	11:20AM
	T	~~Estimator~~	New Haven CT 06511	F	203-772-4568	
	C	Fusco Corp		C		

RECORD OF ATTENDANCE
PRE-BID CONFERENCE
ADDENDUM #6

2 OF 5

State of Connecticut

Department of Public Works

PROJECT # & NAME: BI-RT-843 Additions & Renovations to H.C. Wilcox Technical High School, Meriden, CT
DATE/TIME/ROOM: Tuesday, August 10, 2010 10:00 AM Tiered Lecture Hall, Wilcox THS, Meriden, CT

PLEASE PRINT NEATLY

TIME IN		NAME/TITLE/COMPANY	ADDRESS & EMAIL ADDRESS		PHONE/FAX/CELL	TIME OUT
9:40	N	DiRienzo Mechanical Cont.	1299 Whalley Avenue	P	203-397-0367	11:20
	T	203-397-0367	New Haven CT 06515	F	203-387-7877	
	C	203-996-6809	william@dirienzomech.com	C	203-996-6809	
945	N	CHRISTOPHER PETRE	64 TRIANGLE ST.	P	203 731-3132	11:25
	T	ESTIMATOR	DANBURY, CT	F	203 748 8747	
	C	RIZZO CORPORATION	~~[illegible]~~ 06810	C		
945	N	ART Norton	195 Church St 16th Fl	P	203-789-8700	11:25
	T	203-789-8700 pm	New Haven, CT 06510	F	203-789-8776	
	C	203 789-8776 WT	don.richardson@whtrow/NMA	C	203-410-7318	
9:47	N	CHRIS NANCI	10 McKEE PLACE	P	203-271-0356	11:21
	T	ESTIMATOR	CHESHIRE CT 06410	F	203-272-5073	
	C	FIP CONSTRUCTION	nanci@fipconstruction.com	C	203 641-4438	
945	N	Enco Environmental	PO Box 2645	P	203 754 5959	
	T	Estimator	Wtby, Ct.	F	203 757-5979	
	C	Elvis Plisner		C		
9:45	N	Gerald F Buttner	85 Tremont st	P	~~203 537 9801~~ 203 238-4367	
	T	Chief Estimator	Meriden Ct 06450	F	203-634-6601	11:20
	C	Gem's Carpentry LLC		C	203-537 9801	
9:45	N	TF Electric Inc	31 Townsend	P		
	T	(203) 467-9168	New Haven	F	(203)	
	C	(203) 410-7643		C		
	N	Bantom Const	339 Washington Ave	P	203 234 2343	
	T	THOMAS PFAFF	NORTH HAVEN, CT 06473	F	203 234-0100 fax	
	C	P.E.	tpfaff@bantomcontracting.com	C		11:20
	N	David Pontbriand	104 Sebethe drive	P	860.250.7167	
	T	siemens	Cromwell, ct 06416	F	866.265.7349	
	C		David.Pontbriand@siemens.com	C		
	N			P		
	T			F		
	C			C		
	N			P		
	T			F		
	C			C		
	N			P		
	T			F		
	C			C		

RECORD OF ATTENDANCE 3 OF 5

PRE-BID CONFERENCE

ADDENDUM #6

State of Connecticut

Department of Public Works

PROJECT # & NAME: BI-RT-843 Additions & Renovations to H.C. Wilcox Technical High School, Meriden, CT

DATE/TIME/ROOM: Tuesday, August 10, 2010 10:00 AM Tiered Lecture Hall, Wilcox THS, Meriden, CT

PLEASE PRINT NEATLY

TIME IN		NAME/TITLE/COMPANY	ADDRESS & EMAIL ADDRESS		PHONE/FAX/CELL	TIME OUT
	N	Bruce Sullivan	50 Concord St.	P	978 470 7860	
	T	Project Manager	N. Reading MA 01864	F	978 470 1017	
	C	978 375 0383 DECTAM	bsullivan@dectam-com	C	bsullivan@dectam.com	
	N	Mike Morris	50 Concord St.	P	978 470 7860	
	T	Sales Estimator	N. Reading MA 01864	F	978 470 1017	
	C	DECTAM Corporation	mmorris@dectam.com	C		
	N	Mary Hanley	1999 South Main	P	203-754-3231	
	T	Estimating Assistant	Waterbury, CT	F	203-756-3695	
	C	CH Electric	MaryHanley@CHELECTRIC.com	C	203-808-1802	
9:50	N	Bogdan Jachimiec	30 Batterson Park Rd	P	860-284-7446	11:19
	T	Sr Estimator	Farmington CT 06032	F	860-284-0121	
	C	KBE Building Corp	BJachimiec@KBEBuilding.com	C		
9:47	N	Timothy Gunn	100 Mill Plain Rd	P	203-830-3304	11:19
	T	VP	Danbury CT 06811	F	203-790-6138	
	C	Morganti Group	TGunn@Morganti	C		
9:49	N	Timothy Gunn	100 Mill Plain Rd	P	203-830-3304	11:19
	T	VP	Danbury CT 06811	F	203-790-6138	
	C	Morganti / Rizzo JV	TGunn@Morganti	C		
9:50	N	Chris Shugrue	10 Mickee Place	P	203-271-0356	11:20
	T	PM	Cheshire CT 06410	F	203-272-5073	
	C	FIP Construction	Shugrue@FIPconstruction	C		
	N	Kent Scott	116 Hopping Brook Rd	P	508-306-5234	
	T	BD	Holliston MA 01746	F	508-429-7825	
	C	Wayne J. Griffin Electric		C	kscott@wjgei.com	
	N	Jason Wolfahrt	112 Northwest Dr.	P	860 793 5037 ex 226	
	T		Plainville CT 06062	F	860 793 5050	
	C	Ferguson Electric / Mechanical		C	jwolfahrt@fergus.com	
9:55	N	[illegible]		P	203 272 7415	
	T			F		
	C	Fusco		C		
9:55	N	D Fugliotti	100 Nunzio Dr	P	860 621 9663	
	T		Plantsville	F		
	C			C		
9:50	N	J.P. O'Donnell		P		
	T	(845) 661-4230		F		
	C	Kohler Ronan		C		

RECORD OF ATTENDANCE
PRE-BID CONFERENCE
ADDENDUM #6

4 OF 5

State of Connecticut

Department of Public Works

PROJECT # & NAME: BI-RT-843 Additions & Renovations to H.C. Wilcox Technical High School, Meriden, CT
DATE/TIME/ROOM: Tuesday, August 10, 2010 10:00 AM Tiered Lecture Hall, Wilcox THS, Meriden, CT

PLEASE PRINT NEATLY

TIME IN		NAME/TITLE/COMPANY	ADDRESS & EMAIL ADDRESS		PHONE/FAX/CELL	TIME OUT
9:42 AM	N	PAUL SHAMAS	707 Summer St., Stamford,	P	203-388-1157	11:20
	T	VP of Estimating	CT 06901	F	203-359-0202	
	C	AP Construction	pshamas@apconst.com	C	203-223-0775	
9:45 AM	N	MIKE HENZY	107 OLD WINDSOR Rd	P	860-242-8586	11:20
	T	CHIEF ESTIMATOR	BLOOMFIELD, CT	F	860-242-8587	
	C	FDS ENGR & CONST	MIKE.HENZY@DSEC.COM	C		
9:45	N	SALVATORE MOTISI	21 ANDERSON LA.	P	914-232-7571	11:20
	T	Sr ESTIMATOR	GARDENS BRIDGE NY 10526	F	914-232-4185	
	C	ANDERON CONST. CORP	smotisi@androncc.com	C	914-755-2895	
9:50	N	JOHN STANFORTH		P		11:20
	T	ESTIMATOR		F		
	C	ANDERON CONST CORP	JSTANFORTH@androncc.com	C		
9:50	N	Mike Maffucci	1010 Wethersfield Ave	P	860-296-4114	11:20
	T	Superintendent	Hartford CT 06114	F	860-296-7206	
	C	Associated Const.	JWA@ACCGC.com	C	860-930-3205	
9:50	N	Magda Ferrer	101 Amity St.	P	203-238-4367	11:21
	T	President	Meriden, CT 06450	F	203.634.6601	
	C	Gem's Carpentry LLC	m.ferrer@sbcglobal.net	C	203-213-7370	
9:50	N	PETE GRISWOLD	510 CHRISTIAN LANE	P	860 223 3179	
	T	PROJ MANAGER	BERLIN, CT 06037	F	860 223 6898	
	C	COLOSSALE CONSTRUCTION	pgriswold@SNET.NET	C		
9:53	N	Joseph Maliszewski	Texas Road	P	860 413.584.4022	11:19
	T	Manager	Northampton, MA 01061	F	413-584-0041	
	C	Aquaduct Const. Inc.	JRM@Aquaduct.com	C		
9:53	N	T. ACHEER		P		
	T	SSS		F		
	C			C		
9:57	N	LUCIO PIRANACI		P		
	T	SSS		F		
	C			C		
10:00	N	Bill Bedore	80 Clark Dr East Berlin	P		
	T	Sales Rep		F	860-438-3223	
	C	Simplex Grinnell	WBedore@simplexgrinnell.com	C		
LATE ~~10:00~~	N	Jonathan Sygrove	225 Newfield Ave Hartford	P	860-509-3042	
	T	Estimator	CT 06106	F	860-955-1605	
	C	Newfield Construction Inc	jonsygrove@newfieldconstruction	C		

LATE

PROJECT NUMBER BI-RT-843

RECORD OF ATTENDANCE

5 OF 5

PRE-BID CONFERENCE

ADDENDUM #6

State of Connecticut

Department of Public Works

PROJECT # & NAME: BI-RT-843 Additions & Renovations to H.C. Wilcox Technical High School, Meriden, CT

DATE/TIME/ROOM: Tuesday, August 10, 2010 10:00 AM Tiered Lecture Hall, Wilcox THS, Meriden, CT

PLEASE PRINT NEATLY

TIME IN		NAME/TITLE/COMPANY	ADDRESS & EMAIL ADDRESS		PHONE/FAX/CELL	TIME OUT
9:15	N	DAN LEO	1500 Ocean Ave	P	631-744-6147	11:18
	T	Estimator	Bohemia, NY 11716	F	631 744 6156	
	C	J. Kokolakis Contracting	NRLEO@JKokolakis.com	C	631 560 1239	
9:15	N	Michael R Ouillette	100 Access Road	P	781-440-2922	11:20
	T	VP Preconstruction	Norwood MA	F	781-419-5302	
	C	Professional Electric	mouillette@pecofet.com	C	781-603-6199	
9:23	N	Bruce Dube	52 Main St	P	860-643-7116	11:20
	T	General Foreman	Manchester, CT 06042	F	860-647-1660	
	C	Custom Electric	TADAMSON@CUSTOMELECTRIC USA.COM	C	860-250-6687	
9:25	N	Bill Beaudin	27 Pleasant St.	P	860-647-0198	
	T	Proj. Mgr.	Manchester, CT 06040	F	860-646-0775	
	C	Silktown Roofing, Inc.	billb@silktownroofing.com	C	860-250-9385	
9:35	N	Louis DiGregorio	24 Taylor Ave	P	203 797.8766	11:20
	T	Project Manager	Bethel CT 06801	F	203 791.2515	
	C	North Construction	[illegible]	C		
9:35	N	Michael Steinbrecher	200 Stanley St	P	860-229-3755	11:21
	T	Project Manager	New Britain CT	F		
	C	DeVines Construction		C	860-209-4367	
9:30	N	Barbara Cosgrove	165 Capitol Ave	P	860-713-5644	
	T	Project Manager	Hartford CT 06106	F	860-713-7270	
	C	DPW State of CT	barbara.cosgrove@ct.gov	C	860-214-6502	
9:40	N	Al Richmond	29 Industrial Park Rd.	P	860-807-2181	
	T	Consultant Bldg. Planning	Middletown, CT.	F	860-807-2414	
	C	DMR State of CT		C		
9:40	N	Thomas Mauri	21 Acorn Rd	P	203-481-3446	11:20
	T	Supervisor		F	203-483-8804	
	C	A. Secondino + Son	Branford, CT	C	203-[illegible]5731	
9:40	N	Justin Dennison	1 Williams Way	P	508-966-6000	
	T	Foreman		F		
	C	TMC Services Inc.	Bellingham Ma	C	508-400-7198	
9:45	N	Tony Mancini	30 Batterson Park Rd	P	860-284-7417	11:20
	T	Project Executive	Farmington CT. 06032	F	860-284-7817	
	C	KBE Building Corp.		C		
	N	Jeff Plosay	802 Boston Post Rd.	P	203-[illegible]932-[illegible]	
	T	P.M.	West Haven CT 06516	F	11 932-9892	
	C	AAIS Corp	Jeff@aaiscorp.com	C		

DPW Project Number: BI-RT-843
Appendix #3
Addendum #6

SELF-IMPLEMENTING CLEANUP PLAN
H.C. WILCOX TECHNICAL HIGH SCHOOL

Site Location

298 Oregon Road
Meriden, CT

Prepared For

Connecticut Department of Education

Connecticut Technical High School System
and
Connecticut Department of Public Works

Prepared By

TRC Environmental Corporation
Windsor, Connecticut

June 2010

DPW Project Number: BI-RT-843
Appendix #3
Addendum #6

SELF-IMPLEMENTING CLEANUP PLAN H.C. WILCOX TECHNICAL HIGH SCHOOL

Site Location

298 Oregon Road
Meriden, CT

Prepared For

Connecticut Department of Education

Connecticut Technical High School System
and
Connecticut Department of Public Works

DPW Project BI-RT-843

Prepared By

TRC Environmental Corporation
Windsor, Connecticut

TRC Project No. 176153.0000.0000
June 2010

TRC Environmental Corporation
21 Griffin Road North
Windsor, Connecticut 06095
Telephone 860-298-9692
Facsimile 860-298-6399

TABLE OF CONTENTS

SECTION PAGE

1.0 INTRODUCTION....1
1.1 Non-federally Regulated Building Material....2
1.2 Site Description and Location....3
1.3 Facility and Renovation Project Description....6
1.4 Sampling Program Description....7
1.4.1 Bulk Product Building Material Sampling....8
1.4.2 Building Material Substrate Sampling....10
1.4.2.1 Interior Building Material Substrates....10
1.4.2.2 Exterior Building Material Substrates....11
1.4.2.3 Exterior Surfaces Adjacent to Building....12
1.4.3 Soil Sampling....12
1.4.3.1 Northeast Side Wing A....14
1.4.3.2 Northwest Side Wing A....15
1.4.3.3 North Side Wing B....17
1.4.3.4 South Side of Wing C....18

2.0 REMEDIATION PROCEDURES....19
2.1 Safety and Monitoring Requirements....20
2.2 Public Communication....21
2.3 Engineering Control Descriptions....21
2.3.1 Interior Remediation Procedures for Demolition Activities....21
2.3.2 Interior Remediation Procedures for Renovation Activities....23
2.3.3 Exterior Remediation Procedures....24
2.3.4 Phased Remediation....25
2.4 Cleanliness Verification....26
2.5 Verification Sampling....27
2.6 Soil Remediation....28
2.7 Waste Characterization, Transport, and Disposal....29
2.8 Equipment Decontamination....30
2.9 Notification and Certification....30

3.0 DOCUMENTATION....31
3.1 Field Notes....31
3.2 Photographs....31
3.3 Survey....31
3.4 Transport and Treatment/Disposal Certifications....32
3.5 Report....32
3.6 Recordkeeping....32

TABLE OF CONTENTS

(continued)

TABLES

1 Bulk Product Sample Analytical Results
2 Building Substrate Sample Analytical Results
3 Soil Sample Analytical Results
4 Quantification of Materials to be Abated and Verification Sample Estimate

FIGURES

1 Site Aerial
2 Building Construction and Renovation History
3 Site Plan with Bulk Caulk Sample Locations
4 Elevation Views with PCB Bulk Product Waste Locations
5 Site Plan with Soil and Building Material Sampling Locations
6 Site Plan View PCB Soil Remediation Areas
7 A-Wing Northeast Soil Sample Locations
8 A-Wing Northwest Soil Sample Locations
9 B-Wing North Soil Sample Locations

APPENDICIES

A Non-Federally Regulated PCB-Containing Building Material Scope of Work
B Analytical Data Reports
C Materials Sampling Protocols & Field Notes
D Public Communication Procedure
E Engineering Control Descriptions
F EPA Region 1 SOP
G Notification and Certification

1.0 INTRODUCTION

TRC Environmental Corporation (TRC) has prepared this Self-Implementing Cleanup Plan (SIP) for use by the Connecticut Department of Public Works (CT DPW) in conducting site remediation tasks prior to the performance of site renovation and demolition tasks at the H.C. Wilcox Technical High School (Site or Wilcox Tech) located at 298 Oregon Road in Meriden, Connecticut. The Site, which is part of the Connecticut Technical High School System, is owned by the Connecticut Department of Education (CT DOE). The CT DPW will have contract oversight for the work contained in this SIP and therefore, will be responsible for the cleanup. Correspondences of final approvals or actions should be address to:

Joseph V. Cassidy, P.E., Director of Technical Services
Department of Public Works
165 Capitol Avenue, Room 275
Hartford, Connecticut 06106
Email: joseph.cassidy@ct.gov
Facsimile: (860) 713-5725

General correspondence and questions should be addressed to:

Jeffrey S. Bolton, Supervising Environmental Analyst
Department of Public Works
165 Capitol Avenue, Room 275
Hartford, Connecticut 06106
Email: jeffrey.bolton@ct.gov
Phone: (860) 713-5706
Facsimile: (860) 713-5725

The goal of Site remediation detailed in this SIP is to achieve compliance with applicable regulations as stated in 40 CFR §761.61(a), §761.61(c) and §761.62(a) and the Regulations of Connecticut State Agencies (RCSA) Sections 22a-133k-1 through 22a-133k-3, inclusive, governing Polychlorinated Biphenyls (PCBs). This SIP only addresses environmental issues related to PCBs and includes an outline of the approach and procedures that Contractors will follow to ensure achievement of the remedial objectives.

The remedial goals for the Site are as follows:

- To remove all PCB-containing caulk and window glazing classified as PCB Bulk Product Waste and Building Materials (concrete, brick) coated with PCB-containing caulk from buildings that are scheduled for demolition/renovation prior to performance of these activities;
- To remove all soil adjacent to the buildings with total PCB concentrations ≥1 mg/kg contaminated by PCB containing caulk and/or glazing classified as a PCB Bulk Product Waste.

An approach has been developed for this project to achieve the first remedial goal by removing PCB-containing caulk and glazing classified as PCB Bulk Product Wastes and the adjacent building materials that were coated with the subject caulks or glazings for the purposes of waterproofing the building material and/or sealing seams. Due to the overall project schedule and regardless of whether or not the building material is considered PCB Bulk Remediation Waste, the goal will be to remove six inches (6") of building material from around caulk that is considered PCB Bulk Product Waste unless otherwise indicated that more material will be removed.

After removal, verification sampling will be performed. For this project, the PCB Bulk Product Wastes and potentially impacted building materials will be considered removed when all verification samples are <1 mg/kg total PCBs.

The second remedial goal is to remove all soil adjacent to the buildings with total PCB concentrations ≥1 mg/kg contaminated by PCB containing caulk and/or glazing classified as a PCB Bulk Product Waste. In order to determine the soil removal boundaries, the soil was characterized per 40 CFR Part 761 Subpart N (Subpart N). After removal of soil, verification sampling will be performed per 40 CFR Part 761 Subpart O (Subpart O). Soil characterization and removal activities will be discussed further in subsections 1.4.3 and 2.6.

1.1 Non-federally Regulated Building Material

In addition to this SIP to address federally-regulated PCB Bulk Product Wastes, the CT DPW and CT DOE have coordinated with the Connecticut Departments of Environmental Protection (CT DEP) and Public Health (CT DPH) to develop a scope of work to remove all

PCB-containing caulks and glazings with total PCB concentrations ≥ 1 mg/kg and < 50 mg/kg that are not classified as federally-regulated PCB Bulk Product Wastes. Following the removal of these building materials, the building materials formerly in contact will be sampled. If total PCB concentrations in the remaining building materials ≥ are 1 mg/kg and the material is scheduled to be left in place (non-demo areas), then an encapsulant will be applied to the area where the caulk and glazing were in contact with building materials and new caulk or glazing will be applied. For areas scheduled to be demolished and the remaining building material samples are ≥ 1 mg/kg, then at least 6 (six) inches of building material will be removed and disposed of as PCB Bulk Product Waste. The CT DEP and CT DPH have concurred with the proposed Scope of Work as described in Appendix A.

1.2 Site Description and Location

Wilcox Tech, built circa 1953 and located in Meriden, Connecticut (see Figure 1 for aerial view of the site), is part of the Connecticut Technical High School System which provides students in grades 9-12 the opportunity to take courses in trades and technology as well as the more typical high school academic courses. It currently offers trade courses in culinary arts, hairdressing/barbering, carpentry, electrical, heating ventilation and air conditioning, plumbing and heating, manufacturing technology, automotive technology, electronics technology, graphics technology, information systems technology, and health technology. It is situated in a wooded, residential area with Orville Platt High School to the Northeast, a stream to the East and Hanover Pond to the South.

Original construction was performed in 1961. Renovation and construction activities at the Wilcox Site were mainly focused on the creation of new space; 1972 construction of the C-Wing and additions to the B-Wing, 1979 construction of the Annex and addition to the B-Wing, 2004 Cafeteria construction, and the 2005 construction of the Auxiliary Gymnasium and classrooms. Limited internal modifications were performed that involved gutting of structures to create new rooms; 1980 Welding Shop renovation, 2004 Cafeteria modifications, A-Wing Guidance Rooms, and Annex Classrooms. These modifications involved removal of all existing classroom/office equipment and features and replacement with new.

The locations of these renovation activities are shown on a site plan included as Figure 2 and a more detailed description is as follows:

- 1961 (BI-RT-177) – original construction, now known as A Wing, B Wing, Gymnasium, Boiler Room, Garages, Cafeteria, Kitchen;
- 1972 (BI-RT-435) – addition of C Wing;
  - Caulks at the interface of the C Wing with the A Wing are the same as those found throughout the A Wing and no alteration or replacement of caulks is suspected. It is suspected that the C7 caulk that was used in vertical joints in this building wing was also used around windows in the B-wing as this is unmistakably the same material.
- 1972 (BI-RT-66) – addition of tool making shop (NW corner of B Wing), addition of printing and sheet metal shop (S side of B Wing), addition to cafeteria, miscellaneous interior renovations;
- 1979 (BI-RT- 279) – construction of Annex, addition of print shop (SE corner of B Wing);
- 1980 (BI-RT-279A) – interior renovation of welding shop into the automotive laboratory and a garage door was added;
- An Existing Floor Plan dated March 8, 2001 showing the structures as they existed at that time was reviewed. This drawing indicates that subsequent renovation activities did not affect the layout of walls within the B-wing, the A-wing (except for the addition of guidance rooms as indicated), and the gymnasium and locker rooms.
- 2004 (BI-RT-826 PH-I) – reconstruction/addition of cafeteria, addition of classrooms south of the garage in the annex, miscellaneous interior renovations, and athletic field improvements;

- The following is a description of the interior renovations that took place during the 2004 Phase I renovations at the school. In the central section of the Annex (south of the garage), the interior walls, doors, and door frames were removed and replaced with new walls, doors, and door frames, in order to create a new classroom area. In addition, the old Geometry Room in Wing A was gutted (walls, doors, and door frames removed down to the studs), and new walls, doors, and door frames were installed to create five new Guidance Rooms. New fire sprinklers and associated piping were installed throughout the school. No windows or exterior walls or building materials were modified during the Annex and Guidance Area renovations and fire sprinkler/piping installation.

- 2005 (BI-RT-826 PH-II) – addition of auxiliary gymnasium, three classrooms, and a storage room to the south of the gymnasium. Miscellaneous interior renovations were also performed.

  - The 2005 Phase II renovations included the removal of asbestos-containing doors and associated hinges throughout the school. The doors and hinges were replaced with new wooden doors and metal hinges; the door frames were left in place and not modified and no modifications were made to the surrounding caulk. In the existing gymnasium, a new HVAC system was installed, along with new lighting, motorized backstops, and motorized draperies. The existing ceiling, piping, ductwork, and exposed structure in the existing gymnasium were painted. The locker rooms associated with the gymnasium were renovated, which included the installation of new bathroom, shower facilities, and new tiles. The cosmetology department was renovated by installing new hairdressing and cosmetology equipment, new motorized shades and new fire sprinklers and piping. No windows or exterior walls or building materials were modified during the gymnasium, locker rooms, and cosmetology department renovations.

No large scale program was ever undertaken at the Wilcox Site that would involve the

removal of existing caulks either for removal of asbestos-containing materials or for maintenance. However, it does appear that caulk C7 (classified as a PCB Bulk Product Waste) was added around windows located on the B-Wing during the 1972 construction of the C-Wing. Thus, it is considered unlikely that there are areas where PCB Bulk Product Waste caulks were removed and replaced with caulks that might not have contained PCBs.

1.3 Facility and Renovation Project Description

Figure 3 shows the location of the buildings and their current use. Figure 4 provides elevation views of the various building structures. The total area of the parcel occupied by Wilcox Tech is 31.14 acres. On the property to the north are wooded areas and a baseball field. On the southern portion of the parcel are additional athletic fields and associated facilities. The school building is located in the center portion of the parcel.

The school buildings are separated into four wings. A description of their current and anticipated future uses and planned renovations is as follows:

- Wing A, approximately 79,600 square feet including a second floor, is the central portion of the building and houses administrative offices, science and hairdressing classrooms, gymnasiums, cafeterias and associated kitchens, and facilities areas. Use of this structure will not be altered. However, the curtain walls are planned to be removed during the renovation from the northwest and northeast exterior of the two story structure that houses the administrative offices, science classrooms, and hairdressing areas. Additional renovation activities include reconstruction of the entry area. Remediation of PCB Bulk Product Wastes (caulk and window glazing) and associated Building Material will be conducted prior to the renovation of Wing A. It is estimated that Wing A has approximately 1375 linear feet (LF) of caulk containing PCBs ≥50 mg/kg. The areas exterior to Wing A include turf and dirt covered areas with limited landscaping. Soil on the northeast and northwest sides of the buildings, adjacent to the curtain walls, also requires remediation.

- Wing B, approximately 54,900 square feet, houses various "shop rooms" used for instruction. The future use of this structure will not be altered but there will be window replacement and internal wall demolition as part of the renovation which will involve gutting the interior to steel supports. Remediation of PCB Bulk Product Wastes (caulk) and associated Building Material will be required before the renovation of Wing B can be performed. It is estimated that Wing B has approximately 335 LF of caulk containing PCBs $\geq$50 mg/kg. The areas exterior to Wing B are nearly all asphalt surfaces with a limited turf covered area on the north side of the structure. PCB impacts to soil in this turf area to the north will require remediation to achieve remedial goals.
- Wing C, approximately 23,000 square feet, is a two story structure that houses classrooms and the demonstration room. This entire structure will be demolished and replaced with new larger buildings as part of the renovation project. Remediation of the PCB Bulk Product Wastes and associated Building Material will be required before the demolition of Wing C can be performed. It is estimated that Wing C has approximately 435 LF of caulk containing PCBs $\geq$50 mg/kg. The area exterior to Wing C is covered with turf and no remediation is planned for soil around this building.
- Limited renovation activities are planned for the Annex (approximately 1,600 SF) which is a separate building located to the east of all the other structures. There are no federally-regulated caulks within this structure.

1.4 Sampling Program Description

Sampling was performed to categorize interior and exterior caulk, to ascertain PCB concentrations within Building Materials by sampling six inches from areas coated with PCB Bulk Product Wastes, and to characterize and delineate extent of impacts to soil or other materials that may have been affected by flaking or deteriorating PCB Bulk Product Wastes.

All of the building material sample analytical results are presented in Table 1 and the sample locations are shown on Figure 3 and on the elevation views provided on Figure 4. All of

the building materials classified as being federally regulated, as discussed in subsection 1.3.1.1 are shown on Figures 3 and 4. Sample analytical results from Building Materials in contact with PCB Bulk Product Waste and asphalt and concrete beneath these wastes are presented in Table 2 with the sample locations shown on Figure 5. Soil sample analytical results are presented in Table 3 and the grab sample locations are shown on Figure 5, while specific areas requiring remediation are detailed on Figures 6 through 9. Analytical data reports are attached in Appendix B.

1.4.1 Bulk Product Building Material Sampling

On December 30 and 31, 2009 TRC collected interior and exterior bulk caulk samples at Wilcox Tech in Meriden (one sample was also collected on January 7, 2010). Sampling methodology involved collecting a single grab sample per homogenous material type identified following building material survey techniques generally employed in the Building Sciences industry to identify, locate and sample homogeneous building materials (i.e. Asbestos Hazard Emergency Response Act [AHERA] asbestos sampling guidelines). A more detailed sampling method description and the field notes are located in Appendix C. Building wings constructed after the federal ban on PCB use were not included in the scope of the survey (i.e. post 1979 construction). The Environmental Protection Agency (EPA) Methods 8082/3540C (PCB analysis with soxhlet extraction) were used for analysis at a State of Connecticut approved laboratory.

Building materials were grouped into one of three categories as defined in §761.3 under the federal regulations using the following criteria:

- **PCB Bulk Product Waste –** All caulk and glazing samples with total PCB concentrations ≥50 mg/kg were included in this category. A total of five exterior and five interior caulk and two window glazing samples met this criteria.
- **PCB Remediation Waste –** Caulk with total PCB concentrations ≥1 mg/kg but <50 mg/kg which were applied over a caulk with total PCB concentrations ≥50 mg/kg or where the concentration of the original caulk could not be determined. No evidence of

recaulking was found at any of the sample locations. Thus, none of the building caulks were determined to be PCB Remediation Waste.

- **Excluded PCB Products –** Building caulks were determined to be Excluded PCB products if the determined in-situ total PCB concentration was <50 mg/kg and if it could be determined that the caulk was original and that the total PCB concentration had not been modified by subsequent activities. As discussed above, all of the building caulks were determined to be original to building construction and there was no evidence that subsequent renovations had modified total PCB concentrations. Thus, out of the forty-one building caulks sampled, thirty-one were determined to be Excluded PCB Products.

The new Gym Section and the new Cafeteria Section were reported as post 1979 construction and not included in the scope of the survey. The Annex, the older Gym Section and the Kitchen Section had no areas of identified PCB Bulk Products. The areas identified as containing PCB Bulk Products based upon sample results of homogenous material are shown on Figure 3 and a description of the caulks and glazings are as follows:

- Exterior white/grey hard door caulk (DC1) over foam at the east and west entries to the C Wing, at the northeast entry near the old gym and at the southeast entry to the C Wing;
- Exterior grey pliable door caulk (DC2) at the north entry to the demonstration room, and at the southwest doors to the C Wing;
- Exterior white brittle window glazing (G1) throughout the A Wing windows, on the north and east sides of the B Wing, and the east side mechanical room windows;
- Exterior grey/silver caulk (C2) along the window wall and brick throughout the A Wing windows;
- Exterior grey pliable caulk (C7) between window panels and concrete on the south side of the C Wing and on the north, south, and west sides of the B Wing;
- Interior hard grey caulk (IDC3) around the doors of the auto shop, carpentry shop

and northwest corner shop;

- Interior beige pliable expansion joint caulk (IE1) in the graphics shop classroom and in the hall outside graphics;
- Interior grey rubber expansion joint caulk (IE2) over foam in the graphics shop and plumbing shop,
- Interior hard grey widow glazing (IG1) found throughout the A, C, and B Wings; and
- Interior grey window caulk (IC4) in the plumbing shop classroom.

1.4.2 Building Material Substrate Sampling

Building Material substrate samples were collected in a manner that would allow for determination of the effectiveness of the proposed removal activities which is the removal of six inches of Building Materials surrounding the caulked seams with PCB Bulk Product Wastes. Representative samples of Building Material substrates were collected a distance of six-inches from the subject caulked seams. This was accomplished by measuring the distance from the caulked seam and then marking a line parallel to the caulked seam on the building materials to be sampled. In addition, concrete or asphalt samples were collected a distance of one foot from the base of the wall where the caulked seam was located. Samples were collected following the EPA Region 1 Standard Operating Procedure for Sampling Concrete at each of the locations. Samples were extracted and analyzed using EPA Methods 3540C and 8082, respectively, and all analytical results were reported on a dry weight basis.

1.4.2.1 Interior Building Material Substrates

Six samples were collected from interior building substrates within Wing B which had associated interior expansion joint and window caulks that were classified as PCB Bulk Product Wastes. The sample results are shown on Table 2 and all have a sample prefix starting with IBB. Of these six interior sample results, one was non-detect for PCBs and four of the others had total PCB concentrations ranging from 0.126 mg/kg to 0.887 mg/kg. The other sample result had a total PCB concentration of 1.87 mg/kg. These sample results indicate that removal of six inches

of Building Material substrate will be adequate in meeting this project's goal except for the interior expansion joints. Thus, remedial actions around these caulks, IE1 and IE2, will include removal of twelve inches of building materials on either side of the caulk.

No samples of interior Building Material substrates were taken in Wing C which is scheduled for demolition. The PCB Bulk Product Waste on the interior of this structure is window glazing. The window sills were constructed of an impervious building stone. Thus, it was determined that due to the building substrates meeting the definition of a non-porous material and will be demolished, that they will be decontaminated and verified as being clean by performing wipe samples as per §761.123 and having total PCB concentrations in the wipes <10 ug/100 cm^2, prior to performing demolition activities.

1.4.2.2 Exterior Building Material Substrates

Twelve samples were collected from exterior building substrates throughout Wings B and C. The building caulks found within Wing A were situated such that they were separated from porous materials by nonporous materials (metal or glass). Therefore, sampling of the porous materials within Wing A was not deemed necessary as the nonporous materials would prevent the porous building substrate from being coated with PCB containing caulk. Building substrate sampling was also not performed for window glazings as these materials are only in contact with non-porous surfaces (glass and metal window frames).

The samples collected were spread across Wings B and C to evaluate the levels of PCB within the Building Material substrates and the analytical results are in Table 2. Of these samples, seven were non-detect for PCBs and the other five analytical results were all < 0.2 mg/kg. Thus, sampling of the exterior building substrates indicates that:

- Removal of PCB Bulk Product (caulk and glazing) and associated Building Material (non-porous or porous surfaces) should be achievable in one attempt by removing six inches of the Building Material in contact with the PCB Bulk Product Waste building caulks; and
- Any cutting or other methods employed to remove regulated PCB wastes in the manner prescribed will have limited potential for releases of PCBs because of the

limited impacts to the building substrates at this distance from the high concentration source materials.

1.4.2.3 Exterior Surfaces Adjacent to Building

Seven samples were collected from asphalt or concrete located on the ground beneath the locations of PCB Bulk Product Wastes. The Bulk Product Wastes were either building caulks or window glazings. Grab samples were collected one foot from the base of the building at the location of these wastes to assess the potential for impacts to the adjacent ground substrates due to flaking from the glazings and/or caulks. Two of the samples were submitted as grab samples, NWC-BB-A11 and SEC-BA-A2. The other samples consist of composites from two grab samples that were collected adjacent to each other of the same material. The samples were composited by combining equal mass of each of the grab samples.

Of the seven analytical results, five were non-detect for PCBs and one result was < 0.5 mg/kg. These analytical results would indicate that there are no impacts to asphalt or concrete surrounding the buildings that need to be remediated. One of the sample results, AS Comp 1, had a total PCB concentration of 0.56 mg/kg.

1.4.3 Soil Sampling

Soil samples were collected from areas that are grassed or landscaped at locations beneath areas where external PCB Bulk Product Wastes, either building caulks or window glazings, are located. Analytical results are presented in Table 3 and the grab sample locations are shown on Figure 5, while specific areas requiring remediation are detailed on Figures 6 through 9. Analytical data reports are included in Appendix B and sample compositing log sheets are attached in Appendix C.

The soil sampling was performed as follows:

- Initial grab soil samples were collected on March 29, 2010 a distance of one foot from the base of the building at ten foot intervals, except for those collected south of Wing C. Due to the presence of only vertical seams at Wing C, samples were collected only below those seams as that would be the natural pathway of fallen caulk. Each of the grab samples were collected from surficial soil (0- to 2-inch

interval). Composite samples were made by completely mixing aliquots of equal mass from two contiguous grab sample locations.

- A second round of grab soil sampling was performed on May 8, 2010 with the intent of completing the delineation of PCB-impacted soil requiring remediation. Where required to complete the vertical delineation, soil samples were collected at the same location as the previous initial grab soil samples, but at a depth of 1 foot below grade. Some of the areas also required additional sampling to complete the horizontal delineation. Since the PCB source material involves flaking from building caulks, the area affected was expected to be limited as it extends away from the building. Thus, sample intervals were reduced to 1.5 meters (or five feet) from the base of the wall. Additional soil samples were collected from surficial soil five feet out from the original soil sampling locations (6 feet from the building) to complete the horizontal delineation. Composite samples were made by completely mixing aliquots of equal mass from two contiguous grab sample locations from the same depth interval.

Unless otherwise noted below, the ground surface at the grab sample locations is covered with turf and there is no evidence of any landscaping work having been performed. All surficial grab soil samples were collected by removing turf at the sample location, shaking out the soil contained within the turf into the exposed location, and then collecting a sample of surficial soil from 0 to 2 inches below grade. All grab samples collected at a depth of one foot were collected by hand augering to a depth of 1 foot below grade (measured in the field) and then collecting a sample at a depth of 1 foot and penetrating no more than two inches into the exposed surface. Soil removed by augering was replaced into the hole created at the same depths from which it was removed to avoid mixing of potentially contaminated soil with clean.

All of the samples submitted were extracted using EPA Method 3540. Analysis of total PCBs was performed using EPA Method 8082 and the total PCB concentration is based upon the mass of Aroclors reported. The Aroclors reported in soil were 1254 and 1260 which is consistent with what is found in the suspected caulk and glazing source materials and may indicate some

weathering of the Aroclors in the case of 1260 being identified. All of the analytical data are reported on a dry-weight basis.

The following provides details concerning the delineation of PCB-impacted soil at each of the areas where remediation will be required. Soil remediation excavation and verification sampling procedures are discussed in Section 2.4.

1.4.3.1 Northeast Side Wing A

All soil sample locations for the Northeast Side of Wing A are shown on Figure 7. Initially, sixteen surficial grab soil samples were collected from the ground surface beneath vertical and horizontal caulk seams within the curtain wall and window glazings at this location (designated as "s" samples). The ground surface was grassed and there was no evidence of any landscaping work having been performed. All of these initial locations were located one foot from the base of the building and spaced at ten feet intervals. Each of the grab samples was composited for analysis as described above. Four of the eight soil composites submitted exceeded 1 mg/kg total PCBs (maximum composite sample result of 2.575 mg/kg total PCBs) and the rest were all greater than 0.5 mg/kg indicating that additional characterization sampling was required. Window glazing G1, which is found throughout the building wall, in this area is in very poor condition and caulk was observed in soil samples collected.

Additional characterization sampling was performed in order to complete the delineation and determine the area requiring remediation. Grab soil samples were collected at a depth of 1 foot below all of the original sample locations (designated as "s" samples with (1') indicated) to complete the vertical delineation and composited as described above. Analytical data, presented in Table 3, indicate that all of these samples were less than the remedial goal (maximum composite concentration of 0.226 mg/kg) and that a shallow excavation of 0.5 to 1 foot would be sufficient to achieve remedial goals.

Grab surficial soil samples were collected a distance of 5 feet horizontally away from the original sampling locations (designated as "ss" samples) in the manner described above. These samples were composited and submitted for analysis. Analytical results indicate that all of these samples contained PCBs at concentrations less than the remedial goal (maximum composite

concentration of 0.369 mg/kg) and that any excavation performed at this location would not have to extend 6 feet from the building face. A duplicate composite sample was prepared for these sample locations (designated as NESBA-Comp 16 and NESBA-Comp 17). The analytical results for these two samples were 0.114 mg/kg and 0.104 mg/kg, respectively. These data would indicate sufficient precision in the sampling and analytical and that the soil 6 feet from the building is likely to be homogenous as far as PCB concentrations.

The grassed area northeast of Wing A is approximately 160 feet long and 10 feet wide, and is bordered by concrete walkways at exit doors and a concrete sidewalk. Assuming an excavation of 1 foot deep and extending 3 feet from the wall, approximately 18 cubic yards (CY) of soil will be excavated to achieve remedial goals. No additional characterization sampling is needed to determine the area requiring remediation.

1.4.3.2 Northwest Side Wing A

All soil sample locations for the Northwest Side of Wing A are shown on Figure 8. Initially, twenty-four surficial grab soil samples were collected from the ground surface beneath vertical and horizontal caulk seams within the curtain wall and window glazings at this location (designated as "s" samples). The ground surface was grassed but there was some evidence of landscaping work having been performed. All of the initial sample locations were located one foot from the base of the building and spaced at ten feet intervals. Each of the grab samples was composited for analysis as described above. All of the twelve soil composites submitted exceeded 1 mg/kg total PCBs (maximum composite sample result of 17.8 mg/kg total PCBs) indicating that additional characterization sampling was required. Window glazing G1, which is found throughout the building wall, in this area is in very poor condition and caulk was observed in soil samples collected.

Additional characterization sampling was performed in order to complete the delineation and determine the area requiring remediation. Grab soil samples were collected at a depth of 1 foot below all of the original sample locations (designated as "s" samples with (1') indicated) to complete the vertical delineation and composited as described above. Analytical data, presented in Table 3, indicate that eight of the twelve composite samples submitted were less than the

remedial goal, one was greater than 0.5 mg/kg but less than 1.0 mg/kg, and that three were greater than 1.0 mg/kg (maximum composite concentration of 9.31 mg/kg). A shallow excavation of 1 to 1.5 feet below grade will be performed and may be sufficient to achieve remedial goals.

A duplicate composite sample was prepared for these sample locations (designated as NWSBA-Comp 4 and NWSBA-Comp 26). The analytical results for these two samples were 1.76 mg/kg and 8.13 mg/kg, respectively. These data would indicate insufficient precision which is suspected to be due to the possible presence of small flakes (not visible to the eye) of highly contaminated caulk within the soil.

Grab surficial soil samples were collected a distance of 5 feet horizontally away from the twenty-four original sampling locations (designated as "ss" samples) in the manner described above. These samples were composited and submitted for analysis. Analytical results indicate that three of the twelve composite samples submitted were less than the remedial goal, seven were greater than 0.5 mg/kg but less than 1.0 mg/kg, and that two were greater than 1.0 mg/kg (maximum composite concentration of 1.36 mg/kg). Any excavation performed at this location would have to extend 6 feet from the building face at some locations to achieve remedial goals.

A duplicate composite sample was prepared for these sample locations (designated as NWSBA-Comp 24 and NWSBA-Comp 25). The analytical results for these two samples were 0.293 mg/kg and 0.303 mg/kg, respectively. These data would indicate sufficient precision in the sampling and analytical and that the soil 6 feet from the building is likely to be homogenous as far as PCB concentrations.

The grassed area northwest of Wing A is approximately 240 feet long and 30 feet wide, and is bordered by concrete walkways at exit doors and a concrete sidewalk. Assuming an excavation of 1 to 1.5 feet deep and extending on average 5 feet from the wall, approximately 67 cubic yards (CY) of soil will be excavated to achieve remedial goals. No additional characterization sampling is needed to determine the area requiring remediation even though some locations remain that are not delineated to a concentration of <1.0 mg/kg total PCBs.

1.4.3.3 North Side Wing B

All soil sample locations for the North Side of Wing B are shown on Figure 9. Six grab soil samples were initially collected from the ground surface beneath vertical caulk seams and window glazing around windows in this building (there were no horizontal caulk seams at this wing). The ground surface was grassed and there was no evidence of any landscaping work having been performed. Each of the grab samples was composited for analysis as described above. Analytical data, presented in Table 3, indicate that one of the soil composites, NSBB Comp 1, exceeded 1.0 mg/kg, with a total PCB concentration of 2.549 mg/kg. One of the soil composites, NSBB Comp 3, exceeded 0.5 mg/kg, and each of the grab samples was submitted for analysis. Grab sample NS-BB-S5 exceeded 1.0 mg/kg (1.018 mg/kg) and the other NS-BB-S6 was 0.027 mg/kg.

Five additional grab samples were collected to complete the delineation of PCB-impacted soil around grab sample locations NS-BB-S1 and NS-BB-S2. NS-BB-SS1E was collected from surficial soil five feet to the east of NS-BB-S1 (just within the bordering concrete walkway) and an analytical result of 1.092 total PCBs was determined. Two samples were collected at a depth of one foot below these locations (NS-BB-S1 and –S2 (1')) and composited. The composite sample at a depth of one foot had a total PCB result of 0.106 mg/kg indicating that the vertical delineation is complete. Two samples were collected at a distance of 5 feet away from these locations (NS-BB-SS1 and -SS2) and composited. The composite sample total PCB concentration was 0.0588 mg/kg.

Two additional grab samples were collected to complete the delineation of PCB-impacted soil around grab sample NS-BB-S5. NS-BB-S5 (1') was collected from beneath this location and was non-detect for PCBs. NS-BB-SS5 was collected five feet from this location and was also non-detect for PCBs. Thus delineation at NS-BB-S5 is considered to be complete.

The grassed area north of Wing B is approximately 65 feet long and 15 feet wide and is bordered by concrete walkways at exit doors and an asphalt parking area. Two small excavations are required to address soil impacted with PCBs at concentrations greater than 1 mg/kg. It is estimated that approximately 2 CY will be excavated at the location of grab samples NS-BB-S1

and NS-BB-S2 and that less than 1 CY will be excavated at the location of grab sample NS-BB-S5.

1.4.3.4 South Side of Wing C

Three grab soil samples were collected from the ground surface beneath vertical caulk seams around windows in this building. The ground surface was grassed and there was no evidence of any landscaping work having been performed. Each of the grab samples collected were submitted and no compositing was performed. Each of the sample results were less than 0.2 mg/kg total PCBs and no further investigation or remediation is proposed.

No other soil sampling was performed around the perimeter of Wing C as the C7 caulk was not found at any other locations on Wing C. No investigation activities are proposed for these areas.

Two grab sand samples were collected where road sand had collected and caulk was visible within the sand. These samples were composited into one sample with an analytical result below 0.1 mg/kg. No further investigation or remediation is proposed for this area.

2.0 REMEDIATION PROCEDURES

PCB Bulk Product Waste (caulk and glazing), Building Material (six or twelve inches from caulk classified as PCB Bulk Product Waste), and PCB Remediation Wastes (soils, see Section 2.6) will be removed utilizing abatement work practices and engineering controls to limit the potential release of PCB dust/debris. All materials will be containerized and then transported for appropriate disposal. The removal of PCB Bulk Product Waste, Building Material, and Remediation Wastes will be performed by a specialty contractor, utilizing workers afforded appropriate hazard communication training, under the supervision of an appropriately educated and trained third party (field inspector) who can validate appropriate removal techniques and confirm thorough removal of identified materials.

The goal of building material remediation efforts is to ensure that all PCB Bulk Product Wastes and the associated building materials are removed from areas that are being demolished or renovated.

Exact means and methods for all building material removal actions cannot be specified as sufficient construction drawings are not available for the structures to be demolished or renovated. The guidelines provided below present the general procedures that are to be followed for the removal of building materials and excavation of soil but the contractor will have to determine exact removal actions during the performance of the work.

With the exception of soils, as described in 2.6 and 2.7, no segregation of Federally- or non-federally Regulated PCB wastes will be performed and materials will be removed together at each location. This includes material generated during the removal of PCB-containing caulks with PCB concentrations <50 mg/kg. For this particular project, the remedial standard for all verification samples will be total PCB concentrations <1 mg/kg. Achieving this remedial standard at all verification sampling locations will allow for the remaining building materials to be demolished as “clean” or to remain in place and to be repaired during subsequent renovation activities. Section 2.3 discusses the verification sampling in more detail.

2.1 Safety and Monitoring Requirements

It is anticipated that workers and students will use the Wilcox Technical School buildings while removal and abatement is ongoing. To prevent exposure of these persons to contaminated dust, Control Areas will be established outside of the Regulated/Containment/Soil Excavation Areas. Only properly trained personnel associated with the removal, abatement, and soil excavation actions will be allowed within the Control Areas that will be established by placing barriers with signs indicating that access to the area is restricted. The field inspector will maintain the Control Areas and escort unauthorized personnel from the area promptly. Only those personnel actively working on the removal, abatement, and soil excavation actions will be allowed within the Regulated/Containment Area and they shall be equipped with Personal Protective Equipment (PPE).

For interior removals, dust monitoring will be performed in the Control Area immediately outside the Regulated/Containment Area prior to initiating the remedial action, during performance of the action, and following the remediation which will include the break-down of the Regulated/Containment Area. Monitoring will be performed for total suspended particulates (TSP). The background concentration within each interior Control Area will be determined prior to initiating remedial actions and a control area background level will be established. If, during the performance of air monitoring during remediation, dust levels outside the Regulated/Containment Area are observed to increase by 20-percent over the background level determined prior to the remediation, the contractor shall be instructed to stop work, reestablish the regulated Containment Area and associated engineering controls, and then will be required to decontaminate the remainder of the Control Area outside Regulated/Containment Area prior to restarting work on the remediation.

For soil excavation activities, the remedial contractor will be required to employ dust suppression measures, most likely watering, to prevent dust generation. It is not anticipated that OSHA limits for dust or PCB exposures will be approached. The dust suppression will be employed to prevent the potential release of PCBs to the surrounding environment and the

contractor will be directed to employ dust suppression measures if any dust generation is observed.

2.2 Public Communication

Public outreach will be performed both prior to initiating and during the project to inform the community of the activities that will be performed at the Site to address PCB contamination. An initial public meeting was held at the Site to discuss the findings of the PCB investigation program that included bulk material, wipe, and air sample data. Prior to mobilizing to the site a letter will be sent out to parents and faculty members describing the remediation program that will be part of renovation program at the Site. A draft of this letter is included in Appendix D. Additional information will be provided to the community during the performance of the project as needed or requested by the affected community.

2.3 Engineering Control Descriptions

Engineering controls to be implemented for interior and exterior remediation will follow along similar guidelines as used when conducting asbestos abatement activities. That is, modeled after OSHA Class I asbestos engineering controls for interior remediation work, and modeled after exterior OSHA Class II asbestos engineering controls for exterior remediation work. A description of these activities is as follows, with a more detailed description located in Appendix E.

2.3.1 Interior Remediation Procedures for Demolition Activities

Interior Remediation Procedures for buildings that are to be demolished are as follows:

- It is assumed that, since the buildings will be vacated prior to demolition activities, that all moveable equipment will have been removed prior to the performance of any abatement activities and that the work space shall be free and clear of any obstructions and no materials requiring additional protection will be present
- Any openings between the Remediation Area and the non-remediation areas, including

the outside of the building, shall be sealed off with critical barriers consisting of a minimum of one (1) layer of six (6) mil polyethylene sheeting securing the edges with tape.

- A Negative Pressure Enclosure (NPE) shall be constructed around the work area by covering of floor and wall surfaces with 2 layers of 6 mil polyethylene sheeting sealed with tape. Polyethylene shall be applied alternately to floors and walls.
- The Contractor shall create a negative pressure differential in the range of 0.02 to 0.04 inches of water column between the Remediation Area and surrounding areas by the use of acceptable HEPA-filtered negative air pressure equipment. No air movement system or air filtering equipment shall discharge unfiltered air outside the Remediation Area. The contractor shall continually monitor the pressure differential to ensure that the NPE is functioning appropriately and will stop work if the pressure differential is outside acceptable limits. Work will recommence after an acceptable pressure differential has been established.
- Signs shall be posted outside the enclosure to deter unauthorized personnel from entering.
- Removal work practices within the regulated containment shall be implemented which facilitate the removal of the PCB Bulk Product Waste and associated Building Material while also limiting the amount of dust and debris to be generated. The contractor will remove six inches of Building Material substrate around the PCB Bulk Product Waste.
- All Building Materials removed during the remediation will be wrapped in poly sheeting and transported to the waste storage area. The poly sheeting will be secured with tape to ensure that no dust is released during the transport and the contractor will be responsible for the remediation of any new releases caused by spillage or unauthorized handling.
- Verification sampling will be performed as described below to determine that all Building Material as outlined in this SIP has been removed.

2.3.2 Interior Remediation Procedures for Renovation Activities

Interior Remediation Procedures for buildings that are to remain are as follows:

- Areas where PCB Bulk Products will be removed are to be pre-cleaned using HEPA filtered equipment and/or wet methods as appropriate to collect all loose dust and debris which may contain PCB.
- After pre-cleaning, movable objects will be removed from the work areas. Fixed objects will be enclosed with one layer of six (6) mil polyethylene sheeting sealed with tape.
- Any openings between the Remediation Area and the non-remediation areas, including the outside of the building, will be sealed off with critical barriers consisting of a minimum of one (1) layer of six (6) mil polyethylene sheeting securing the edges with tape.
- A Negative Pressure Enclosure (NPE) will be constructed around the work area by covering of floor and wall surfaces with 2 layers of 6 mil polyethylene sheeting sealed with tape. Polyethylene will be applied alternately to floors and walls.
- The Contractor will create a negative pressure differential in the range of 0.02 to 0.04 inches of water column between the Remediation Area and surrounding areas by the use of acceptable HEPA filtered negative air pressure equipment. No air movement system or air filtering equipment will discharge unfiltered air outside the Remediation Area. The contractor shall continually monitor the pressure differential to ensure that the NPE is functioning appropriately and will stop work if the pressure differential is outside acceptable limits. Work will recommence after an acceptable pressure differential has been established.
- Signs will be posted outside the enclosure to deter unauthorized personnel from entering.
- Removal work practices within the regulated containment will be implemented which facilitate the removal of the PCB Bulk Product Waste and associated Building Material while also limiting the amount of dust and debris to be generated. The contractor will remove six inches, or 12 inches as noted earlier, of Building Material substrate around

the PCB Bulk Product Waste.

- All Building Materials removed during the remediation will be wrapped in poly sheeting and transported to the waste storage area. The poly sheeting will be secured with tape to ensure that no dust is released during the transport and the contractor will be responsible for the remediation of any new releases caused by spillage.
- Verification sampling will be performed as described below to determine that all Building Materials, as outlined in this SIP, has been removed.

2.3.3 Exterior Remediation Procedures

Exterior remediation procedures are as follows:

- Where necessary, the ground adjacent to and beneath areas where PCB Bulk Products and Building Material will be removed, will be remediated after performance of the Bulk Product/Building Material removal and will be protected by the contractor during the remediation activities. During removal of PCB Bulk Products and associated Building Material, ground surfaces in the regulated area will be covered with 2 layers of 6 mil polyethylene sheeting to capture/collect any debris generated, and secured to prevent movement. The sheeting will extend a minimum of ten feet beyond the building area to be remediated.
- Any building openings such as windows, doors, vents, etc in the immediate vicinity of the exterior remediation areas will be sealed off with critical barriers consisting of a minimum of one (1) layer of six (6) mil polyethylene sheeting securing the edges with tape.
- A Negative Pressure Enclosure (NPE) will be constructed around the work area by covering of floor and wall surfaces with 2 layers of 6 mil polyethylene sheeting sealed with tape. Polyethylene will be applied alternately to floors and walls.
- The Contractor will create a negative pressure differential in the range of 0.02 to 0.04 inches of water column between the Remediation Area and surrounding areas by the use of acceptable HEPA filtered negative air pressure equipment. No air movement system

or air filtering equipment will discharge unfiltered air outside the Remediation Area. The contractor shall continually monitor the pressure differential to ensure that the NPE is functioning appropriately and will stop work if the pressure differential is outside acceptable limits. Work will recommence after an acceptable pressure differential has been established.

- Signs will be posted outside the enclosure to deter unauthorized personnel from entering.
- Removal work practices within the regulated containment will be implemented which facilitate the removal of the PCB Bulk Product Waste and associated Building Material while also limiting the amount of dust and debris to be generated. The contractor will remove six inches of Building Material substrate around the PCB Bulk Product Waste.
- All Building Materials removed during the remediation will be wrapped in poly sheeting and transported to the waste storage area. The poly sheeting will be secured with tape to ensure that no dust is released during the transport and the contractor will be responsible for the remediation of any new releases caused by spillage.
- Verification sampling will be performed as described below to determine that all Building Materials, as outlined in this SIP, has been removed.

2.3.4 Phased Remediation

In instances where PCB Bulk Product and Building Material cannot be removed prior to performing "clean" demolition the following procedures will be followed, except in the case of soil remediation:

- The Contractor will be required to physically delineate PCB Bulk Product Wastes and Building Material areas, as outlined in this SIP, on the building with paint or other suitable materials.
- For interior areas to be remediated as part of this SIP, which will not occur until after the initial project start date, will be applied an encapsulant to the caulk and glazing and where it is in contact with adjacent building material.
- Prior to initiating "clean" demolition activities, the Contractor will seal the caulks

classified as PCB Bulk Product Waste and their associated Building Material (6" from the subject caulk) so as to not create additional releases by disturbing the caulk during the demolition. This seal will consist of tape or tape with poly sheeting and the contractor will be required to maintain this seal until this area is ready to be removed.

- "Clean" demolition activities will be performed to the extent of the delineation performed prior to initiating activities and then the contractor will be required to employ interior or exterior remediation procedures as described above to remove the regulated PCB wastes.
- Once the regulated PCB wastes have been removed to the extent indicated as being required by the delineation, the contractor will return to employing "clean" methods for demolition.

2.4 Cleanliness Verification

For interior and exterior containments, the entire area within containment will be HEPA vacuumed to remove dust. The project monitor will then inspect the area to determine that is has been cleaned of all dust generated during the abatement. For interior containments, one or two wipe samples will be collected from horizontal areas where dust will accumulate within each containment. Within the C-Wing classrooms, these wipe samples will be collected from the window sills that are directly beneath the window glazing. For exterior containments, one or two wipe samples will be performed on horizontal building materials that were within the containment.

For areas that are being renovated, where wipe samples are representative of materials to remain in place, all wipe samples will be required to be <1.0 µg/100 cm^2. For areas that are being demolished (e.g., C-Wing), where wipe samples are representative of materials to be removed and disposed, all wipe samples will be required to be <10 µg/100 cm^2. An estimated amount of cleanliness verification wipe samples is included in Table 4. However, the actual number performed in the field will depend upon the number of containments established by the Contractor for the abatement actions.

If any of the containment areas fail any of the cleanliness verification procedures, inspection or wipe samples, the Contractor shall be instructed to reclean the area and all inspections and testing will be performed until the area has been cleared.

2.5 Verification Sampling

Approval of verification on a frequency less than that specified in Subpart O is requested for this remediation project. Based on the existing sample data and this SIP for the project, the proposed verification sampling frequency is one sample per every 50 linear feet of interface between building caulks classified as PCB Bulk Product Waste and Building Material substrates that are porous materials. All verification samples from porous materials will be collected following the EPA Region 1 Standard Operating Procedure which is included in Appendix F. Table 4 lists the areas where samples will be collected for Federally-Regulated caulks and glazings and the estimated number of verification samples to be collected.

Additional details as to sampling protocols are as follows:

- At locations where PCB Bulk Product Wastes are bordered on either side by porous materials (e.g. concrete, brick, masonry) both sides of the removal action will be treated in the calculation of linear feet for verification sampling. If at all possible, verification samples on either side of the caulked joint will be staggered so as to "spread" the location of the verification samples.
- The removal action will include all porous building materials adjacent to the caulked joint. Thus if porous materials are found behind the PCB Bulk Product Waste (caulk) they will also be removed to a depth of 6 inches and the space behind will also be included separately in the calculation of linear feet for verification sampling.
- "Backing" material may be present behind the building caulks. Any backing material adjacent to the PCB containing caulk and in contact/coated with a porous surface will be removed and disposed with the caulk.
- In the cases where air spaces exist behind PCB Bulk Product Waste (caulk) such as,

curtain walls, then no building materials will be removed beyond the limit of the air space.

- No verification samples will be collected when the PCB Bulk Product Waste is classified as a glazing if the glazing is applied to two non-porous surfaces (e.g. glass and metal window frame). Paint on painted metal window frames will be considered to be a porous surface. However, no attempt will be made to segregate materials and the window, glazing, and frame will be totally removed. Thus, the metal frame would have limited the potential impact of PCBs and the building materials in contact with the metal frame will not be considered in the determination of linear feet for verification sampling.

The oversight contractor will collect verification samples at the approved frequency and will be responsible for verifying that sufficient samples have been collected and that the remedial goal has been achieved prior to initiation of "clean" demolition activities. Clean demolition activities will commence after the oversight contractor has determined that remedial requirements have been achieved. In the case where verification samples do not achieve the remedial goal, the oversight contractor will instruct the remedial contractor to reestablish the appropriate controls and regulated area and to continue the removal of Building Materials using the removal procedures as stated above.

2.6 Soil Remediation

Each of the soil remediation areas, north of Wing B and the northeast and northwest sides of Wing A, are easy to access with equipment that would be used in the remediation and it is anticipated that each of the remediations will be performed at the same time. An excavator or other similar type of equipment will be used to remove soil which will be live loaded into lined rolloff containers or dump trailers for transport to the appropriate disposal facility. Verification samples will be collected as per Subpart O following excavation and analyzed in the same manner as previously collected characterization sampling. However, as many as five sample locations may be composited prior to analysis. Any composite samples generated will be from contiguous sample locations on the 1.5 m by 1.5m Subpart O sampling grid. Soil samples collected from the base and

sidewalls of the excavations will consist of surficial soil. Where contaminated soil is in contact with concrete or asphalt, samples of these materials will be collected following the EPA Region 1 SOP for sampling concrete. Composite samples will be submitted for analysis. Composite samples will consist of equal mass aliquots from contiguous sample locations of the same matrix (e.g., soil samples will only be composited with other soil samples).

Characterization samples from the Northeast Side of the A Wing indicate that it would be appropriate to composite up to four samples for submittal to the analytical laboratory. For the Northwest side of the A Wing, there will be no compositing of soil verification samples collected within four feet of the base of the building because of the concentrations determined in the characterization samples. Beyond that limit, a maximum of two verification samples will be composited. For the North Side of the B-Wing, characterization sample analytical results indicate that it would be appropriate to composite four samples for submittal.

All sample compositing activities will be logged such that the date of compositing, the grab samples in the composite, and the mass of each grab sample added to the composite is recorded in a permanent manner. All grab samples will be maintained for potential submittal to the analytical laboratory if required.

Soil excavations will be backfilled with certified clean soil meeting the CTDEP Remediation Standards Regulations (RSRs) for the Residential Direct Exposure Criteria (RDEC) and Groundwater Classification B (GB) Pollutant Mobility Criteria (PMC).

2.7 Waste Characterization, Transport, and Disposal

Wastes will be precharacterized to the satisfaction of the selected disposal facility prior to initiating any remedial activities. All wastes generated during building remediation activities will be shipped for disposal as PCB Bulk Product Waste at a TSCA-permitted facility and no attempt will be made to segregate the removed material. It is anticipated that approximately 125 tons of building materials will be disposed in this manner.

All wastes generated during soil remediation activities will be shipped for disposal as PCB Remediation Wastes at a concentration less than 50 mg/kg at a Subtitle D facility permitted

to receive such waste. It is anticipated that 130 tons of soil will be disposed in this manner.

2.8 Equipment Decontamination

All moveable equipment, tools, and sampling equipment which has contacted the PCB Bulk Product or Remediation Wastes will be decontaminated prior to leaving the site. Decontamination procedures will comply with either §761.79(b)(3)(i)(A), §761.79(b)(3)(ii)(A) or §761.79(c)(2).

All decontamination wastes, PPE, and polyethylene that come in contact with PCB Bulk Product or Remediation Wastes will be disposed of as PCB Wastes with concentrations greater than 50 mg/kg. These wastes will be segregated as to matrix, aqueous, non-aqueous liquids, or solid materials (e.g., PPE), and stored in drums or lined containers prior to transport from the site for disposal.

Aqueous and non-aqueous liquids will be tested for PCB content and shipped offsite for disposal at permitted facility to receive such wastes. Solid Wastes will be containerized with the other regulated PCB wastes generated during the remediation project for transport and disposal.

2.9 Notification and Certification

The removal and abatement measures described within this SIP will be initiated after receiving written approval of the plan from EPA. Notification of intent to perform these remedial measures is provided to EPA with this submittal and will also be provided to the CT DEP and school and local officials.

Also enclosed with this submittal, in accordance with EPA 40 CFR 761.61(a)(3), is a written certification from CT DPW, indicating the location of all reports detailing sample collection and analysis procedures used to assess or characterize the PCB contamination for this SIP are available for EPA inspection.

3.0 DOCUMENTATION

Documentation of the field activities will be performed on a daily basis by the contractor and remediation monitor during the performance of the remediation and will be summarized at the conclusion of the remediation in a Remedial Action Report (RAR).

3.1 Field Notes

The field inspector will maintain a daily log of on-site activities. That log will include, but not be limited to the following:

- Daily health and safety meetings
- Personnel and equipment on site
- Field procedures and observations
- Remediation progress and extents
- Sample locations, selection criteria, samples collected, analyses performed, sample handling
- Telephone or other instructions
- Equipment decontamination
- Building structure substrate /soil verification testing
- Waste transporter information

3.2 Photographs

Photographs will be taken of representative activities, such as remediation, sample locations, and soil excavation. The final extents of the remediation/excavations will also be photographed. Copies of selected photographs will be included in the RAR.

3.3 Survey

The horizontal extents of the soil excavations will be documented by reference to existing fixed site features such as buildings or fence lines. Vertical extents will be measured from the surrounding ground surface. The RAR will include documentation of the extent and depth of the soil excavation.

3.4 Transport and Treatment/Disposal Certifications

Manifests and/or Bills of Lading for the transportation, treatment and disposal of waste materials and certifications of the treatment or disposal of the wastes, if necessary, will be obtained from the transporter and from the treatment/disposal facility. Copies of these forms will be included in the RAR.

3.5 Report

The RAR will be prepared upon receipt of all analytical data confirming that the removal action was complete and receipt of certifications of treatment/disposal from the treatment/disposal facility. The RAR will include the following.

- Site description
- A description of field procedures
- Verification sample locations and analytical results
- A photographic record of the remediation, excavations and backfilling
- Figures showing the extent of excavations and restoration
- Waste characterization sample data
- Waste transport and treatment disposal information
- Copies of waste manifests and bills of lading

3.6 Recordkeeping

All records and documents required by 40 CFR Part 761, including all those records required under Subpart K, will be prepared for and maintained by Wilcox Tech, DOE, and DPW. The records shall be maintained in a centralized location for a minimum of three years and will be available for inspection by representatives of EPA if required.

TABLES

Table 1
Bulk Product Sample Analytical Results
Wilcox Technical High School Demolition and Renovation Project
Meriden, Connecticut

Sample ID	Sample Description	Material Locations	Date Sampled	Date Analyzed	PCB Concentration (mg/kg)[1]	Date Installed	Classification
Door Caulk							
DC1	Exterior white/grey hard door caulk over foam	East and West entries to C wing Northeast entry near old gym Southeast entry to C wing	12/30/2009	1/22/2010	2,000E	Original	PCB Bulk Product
DC2	Exterior grey pliable door caulk	North entry to demonstration room Southwest doors to C wing	12/30/2009	1/22/2010	57,000E	Original	PCB Bulk Product
DC8	Exterior hard grey door caulk	North entry to B wing	12/30/2009	1/23/2010	1.5	Original	Excluded PCB Product
DC9	Exterior dark brown pliable door caulk	East side auto shop entry	12/30/2009	1/23/2010	1.8	Original	Excluded PCB Product
DC10	Exterior white powdery pliable door caulk	South east side of B wing Throughout annex	12/30/2009	1/20/2010	ND<0.50	Original	Excluded PCB Product
DC11	Exterior hard white thick door caulk	West entry to carpentry shop	12/30/2009	1/20/2010	8.5	Original	Excluded PCB Product
DC12	Exterior brown soft pliable door caulk	South side b/w gym and B wings	12/30/2009	1/20/2010	1.9	Original	Excluded PCB Product
IDC1	Interior hard grey/tan thin bead door caulk	2nd floor A wing room A223	12/31/2009	1/20/2010	4.1	Original	Excluded PCB Product
IDC2	Interior off white pliable door caulk	Library soffit area	12/31/2009	1/20/2010	9.6	Original	Excluded PCB Product
IDC3	Interior hard grey caulk around door	Auto Shop, carpentry shop, northwest corner shop	12/31/2009	1/20/2010	62[2]	Original	PCB Bulk Product
IDC4	Interior thick hard dark grey caulk between door and window	Carpentry shop	12/31/2009	1/20/2010	3.2	Original	Excluded PCB Product
IDC5	Interior white door caulk	Auto shop	1/7/2010	1/18/2010	38	Original	Excluded PCB Product
IDC6	Interior dark brown pliable caulk of exterior door	Auto shop	12/31/2009	1/20/2010	6.2	Original	Excluded PCB Product
IDC7	Interior dark brown sticky caulk of exterior door	East side entrance to B wing	12/31/2009	1/20/2010	1.3	Original	Excluded PCB Product
IDC8	Interior off white pliable door caulk	Interior doors in the hotel shop	12/31/2009	1/20/2010	1.57[4]	Original	Excluded PCB Product
IDC9	Interior hard tan door caulk	Closet doors next to mechanical room	12/31/2009	1/20/2010	6.1	Original	Excluded PCB Product
IDC10	Interior soft grey door caulk	Throughout annex	12/31/2009	1/21/2010	3.6[3]	Original	Excluded PCB Product
Expansion Joint Caulk							
IE1	Interior beige pliable expansion joint caulk	Graphics shop classroom & hall outside graphics	12/31/2009	1/20/2010	12,000	Original	PCB Bulk Product
IE2	Interior grey rubber expansion joint caulk over foam	Graphics shop & plumbing shop	12/31/2009	1/20/2010	16,000E	Original	PCB Bulk Product

Table 1
Bulk Product Sample Analytical Results
Wilcox Technical High School Demolition and Renovation Project
Meriden, Connecticut

Sample ID	Sample Description	Material Locations	Date Sampled	Date Analyzed	PCB Concentration (mg/kg)[1]	Date Installed	Classification
Window Glaze							
G1	Exterior white brittle window glazing	Throughout A wing windows North and East sides of B wing East side mechanical room windows	12/30/2009	1/22/2010	1,200	Original	PCB Bulk Product
G2	Exterior black sticky glazing on replacement window	West side gym wing	12/30/2009	1/22/2010	15	Original	Excluded PCB Product
G3	Exterior hard clear over soft grey window glazing	North & south sides of C wing	12/30/2009	1/22/2010	4.3	Original	Excluded PCB Product
G4	Exterior black sticky glazing on window wall panels	South east entry of C wing	12/30/2009	1/22/2010	2.3	Original	Excluded PCB Product
IG1	Interior hard grey window glazing	Throughout A wing, C wing, & B wing	12/31/2009	1/20/2010	200	Original	PCB Bulk Product
IG2	Interior window wall panel glazing	Plumbing shop	12/31/2009	1/20/2010	0.98	Original	Excluded PCB Product
IG3	Interior black sticky interior window panel glazing	Center east side shops	12/31/2009	1/20/2010	ND<0.50	Original	Excluded PCB Product
Miscellaneous Caulk							
C1	Exterior grey over beige expansion joint caulk	North side of main entry foyer	12/30/2009	1/22/2010	39	Original	Excluded PCB Product
		Throughout B wing					Excluded PCB Product
C2	Exterior grey/silver caulk along window wall & brick	Throughout A wing windows East side B wing doors	12/30/2009	1/22/2010	320,000E	Original	PCB Bulk Product
C3	Exterior white pliable caulk on window wall panels	West side A wing near A entry	12/30/2009	1/22/2010	23	Original	Excluded PCB Product
C4	Exterior hard brown caulk along brick	Northwest side A wing	12/30/2009	1/22/2010	1.1	Original	Excluded PCB Product
		East side A wing entries					Excluded PCB Product
C5	Exterior black/grey caulk along window sill	North & south sides of C wing	12/30/2009	1/22/2010	ND<2.5	Original	Excluded PCB Product
C6	Exterior white pliable around a/c unit	South side of C wing	12/30/2009	1/22/2010	9.7	Original	Excluded PCB Product
C7	Exterior grey pliable caulk between window panel and concrete	South side of C wing North, south & west sides of B wing	12/30/2009	1/22/2010	21,000E	Original	PCB Bulk Product
C8	Exterior light grey hard caulk along window and brick	Northeast side of B wing	12/30/2009	1/23/2010	23[2]	Original	Excluded PCB Product
C9	Exterior white hard caulk around metal corner wall guards by garage doors	East side of B wing	12/30/2009	1/23/2010	ND<0.50	Original	Excluded PCB Product
C10	Exterior white soft expansion joint caulk	South section of B wing	12/30/2009	1/23/2010	19	Original	Excluded PCB Product

DPW Project Number: BI-RT-843
Appendix #3
Addendum #6

Table 1
Bulk Product Sample Analytical Results
Wilcox Technical High School Demolition and Renovation Project
Meriden, Connecticut

Sample ID	Sample Description	Material Locations	Date Sampled	Date Analyzed	PCB Concentration (mg/kg)[1]	Date Installed	Classification
Miscellaneous Caulk							
C11	Exterior hard grey caulk between window and brick	Southwest side gym wing	12/30/2009	1/20/2010	20.5[2]	Original	Excluded PCB Product
IC1	Interior white pliable caulk around A/C units	Library	12/31/2009	1/20/2010	3.8[3]	Original	Excluded PCB Product
IC2	Interior white pliable soffit caulk	2nd floor classrooms	12/31/2009	1/20/2010	3.8	Original	Excluded PCB Product
IC3	Interior white pliable caulk around doors & expansion joints	Hallway to B wing and hall to new gym	12/31/2009	1/21/2010	1.5	Original	Excluded PCB Product
IC4	Interior grey window caulk	Plumbing shop classroom	12/31/2009	1/21/2010	71,000	Original	PCB Bulk Product

Notes:

1 PCB Concentration is the total PCB concentration. The only value detected is PCB-1254 unless otherwise noted.
2 PCB Concentration is comprised of PCB-1254 and PCB-1260.
3 PCB Concentration is comprised of PCB-1254 and PCB-1242.
4 PCB Concentration is comprised of PCB-1254 and PCB-1248.
ND< Not detected above listed detection limit
E Result is estimated above the calibration range.

DPW Project Number: BI-RT-843
Appendix #3
Addendum #6

Table 2
Building Substrate Sample Analytical Results
Wilcox Technical High School Demolition and Renovation Project
Meriden, Connecticut

Sample ID	Location Description	Building Substrate Description	Bulk Product Waste Description	Date Sampled	Date Composited	Date Analyzed	PCB Concentration (mg/kg)	Classification
Interior Building Materials								
IBB-WC-BM7	Plumbing room interior window, Wing B	Concrete block 6" from caulked seam	IC4, interior grey window caulk at 71,000 mg/kg	3/28/2010	NA	3/31/2010	0.887	Unregulated
IBB-IE-BM8	Plumbing room interior window, Wing B	Concrete block 6" from caulked seam	IE1, interior beige expansion caulk at 12,000 mg/kg	3/28/2010	NA	3/31/2010	**1.87**	**PCB Remediation Waste**
IBB-IF-BM9	Plumbing room interior window, Wing B	Concrete 1' from wall beneath IC4	IC4, interior grey window caulk at 71,000 mg/kg	3/28/2010	NA	3/31/2010	0.877	Unregulated
IBB-IE-BM10	Print room, southeast interior wall, Wing B	Concrete block 6" from caulked seam	IE2, interior grey expansion caulk at 16,000 mg/kg	3/28/2010	NA	3/31/2010	0.182	Unregulated
IBB-IE-BM11	Print room, southeast interior wall, Wing B	Brick 6" from caulked seam	IE2, interior grey expansion caulk at 16,000 mg/kg	3/28/2010	NA	3/30/2010	ND<0.0589	Unregulated
IBB-IF-BM12	Print room, southwest interior corner, Wing B	Concrete 1" from wall beneath IE2	IE2, interior grey expansion caulk at 16,000 mg/kg	3/28/2010	NA	3/31/2010	0.126	Unregulated
Exterior Building Materials								
SWC-BB BM1	Southwest side, Exterior Wing B	Brick 6" from caulked seam	C7, exterior grey window caulk at 21,000 mg/kg	3/28/2010	NA	3/30/2010	0.178	Unregulated
SWC-BB BM2	Southwest side, Exterior Wing B	Brick 6" from caulked seam	C7, exterior grey window caulk at 21,000 mg/kg	3/28/2010	NA	3/30/2010	0.080	Unregulated
SS-BB-BM4	South side, Exterior Wing B	Brick 6" from caulked seam	C7, exterior grey window caulk at 21,000 mg/kg	3/28/2010	NA	3/30/2010	ND<0.0604	Unregulated
SS-BB-BM3	South side, Exterior Wing B	Brick 6" from caulked seam	C7, exterior grey window caulk at 21,000 mg/kg	3/28/2010	NA	3/30/2010	0.0752	Unregulated
NWC-BB-BM6	Northwest side, Exterior Wing B	Brick 6" from caulked seam	C7, exterior grey window caulk at 21,000 mg/kg	3/28/2010	NA	3/30/2010	0.0761	Unregulated
NWC-BB-BM5	Northwest side, Exterior Wing B	Brick 6" from caulked seam	C7, exterior grey window caulk at 21,000 mg/kg	3/28/2010	NA	3/30/2010	ND<0.0612	Unregulated
SS-BC-BM7	South entryway, Exterior Wing C	Brick 6" from caulked seam	DC2, exterior grey door caulk	3/28/2010	NA	3/30/2010	ND<0.0567	Unregulated
SS-BC-BM8	South entryway, Exterior Wing C	Concrete 1' from wall	DC2, exterior grey door caulk	3/28/2010	NA	3/31/2010	ND<0.0662	Unregulated
SS-BC-BM9	South entryway, Exterior Wing C	Concrete 6" from caulked seam	DC2, exterior grey door caulk	3/28/2010	NA	3/31/2010	ND<0.0620	Unregulated
SS-BC-BM21	South side, Exterior Wing C	Concrete 6" from caulked seam	C7, exterior grey window caulk at 21,000 mg/kg	3/28/2010	NA	3/31/2010	ND<0.0617	Unregulated
SS-BC-BM22	South side, Exterior Wing C	Concrete 6" from caulked seam	C7, exterior grey window caulk at 21,000 mg/kg	3/28/2010	NA	3/31/2010	0.0867	Unregulated
SS-BC-BM23	South side, Exterior Wing C	Concrete 6" from caulked seam	C7, exterior grey window caulk at 21,000 mg/kg	3/28/2010	NA	3/31/2010	ND<0.0572	Unregulated
Exterior Surface Building Materials								
SWC-BB-A Comp	Southwest side, Exterior Wing B	Asphalt 1' from building wall	C7, exterior grey window caulk at 21,000 mg/kg	3/28/2010	3/29/2010	3/30/2010	ND<0.0634	Unregulated
SS-BB-A Comp	South side, Exterior Wing B	Concrete 1' from building wall	C7, exterior grey window caulk at 21,000 mg/kg	3/28/2010	3/29/2010	3/30/2010	ND<0.0605	Unregulated
NWC-BB-A11	Northwest side, Exterior Wing B	Concrete, 1' from building wall	C7, exterior grey window caulk at 21,000 mg/kg	3/28/2010	NA	3/31/2010	ND<0.0652	Unregulated
AS Comp 1	Northeast side, Exterior Wing B	Asphalt 1' from building wall	G1, brittle white window glazing	3/28/2010	3/29/2010	3/30/2010	0.560	Submit Grabs
AS Comp 2	Northeast side, Exterior Wing B	Asphalt 1' from building wall	G1, brittle white window glazing	3/28/2010	3/29/2010	3/30/2010	0.0904	Unregulated
AS Comp 3	Northeast side, Exterior Wing B	Asphalt 1' from building wall	G1, brittle white window glazing	3/28/2010	3/29/2010	3/30/2010	ND<0.0547	Unregulated
SEC-BA-A2	Southeast side, Exterior Wing A	Asphalt 1' from building wall	G1, brittle white window glazing	3/28/2010	NA	3/30/2010	ND<0.0566	Unregulated

Notes: SWC-BB-A Comp a composite of samples SWC-BB-A1 and -A2.
SS-BB-A Comp a composite of samples SS-BB-A4 and -A5
AS Comp 1 a composite of samples NEC-BB-A1 and -A2
AS Comp 2 a composite of samples NEC-BB-A3 and -A4
AS Comp 3 a composite of samples NEC-BB-A5 and -A6
Two aliquots of approximately equal mass were combined to form a composite sample.
Composite samples are indicated by "Comp" in the Sample ID.
ND< Not detected above the listed detection limit

Table 3
Soil Sample Analytical Results
Wilcox Technical High School Demolition and Renovation Project
Meriden, Connecticut

Grab Sample ID	Date Collected	Composite Sample ID	Date Composited	Date Analyzed	Total PCBs (mg/kg)[1]
Northeast Side A Wing					
NESBA-S1 NESBA-S2	3/28/2010 3/28/2010	NESBA Comp 1	3/29/2010	3/30/2010	**2.229** [3]
NESBA-S1 (1') NESBA-S2 (1')	5/8/2010 5/8/2010	NESBA-Comp1	5/10/2010	5/13/2010	0.0570 [3]
NESBA-S3 NESBA-S4	3/28/2010 3/28/2010	NESBA-Comp2	3/29/2010	3/30/2010	*0.624* [3]
NESBA-S3 (1') NESBA-S4 (1')	5/8/2010 5/8/2010	NESBA-Comp2	5/10/2010	5/13/2010	0.226 [3]
NESBA-S5 NESBA-S6	3/28/2010 3/28/2010	NESBA-Comp3	3/29/2010	3/30/2010	*0.881* [3]
NESBA-S5 (1') NESBA-S6 (1')	5/8/2010 5/8/2010	NESBA-Comp3	5/10/2010	5/13/2010	0.151 [3]
NESBA-S7 NESBA-S8	3/28/2010 3/28/2010	NESBA-Comp4	3/29/2010	3/30/2010	*0.781* [3]
NESBA-S7 (1') NESBA-S8 (1')	5/8/2010 5/8/2010	NESBA-Comp4	5/10/2010	5/13/2010	0.0489 [4]
NESBA-S9 NESBA-S10	3/28/2010 3/28/2010	NESBA-Comp5	3/29/2010	3/30/2010	*0.893* [3]
NESBA-S9 (1') NESBA-S10 (1')	5/8/2010 5/8/2010	NESBA-Comp5	5/10/2010	5/13/2010	0.0600 [3]
NESBA-S11 NESBA-S12	3/28/2010 3/28/2010	NESBA-Comp6	3/29/2010	3/30/2010	**2.517** [3]
NESBA-S11 (1') NESBA-S12 (1')	5/8/2010 5/8/2010	NESBA-Comp6	5/10/2010	5/13/2010	<0.0209 [1]
NESBA-S13 NESBA-S14	3/28/2010 3/28/2010	NESBA-Comp7	3/29/2010	3/30/2010	**1.464** [3]
NESBA-S13 (1') NESBA-S14 (1')	5/8/2010 5/8/2010	NESBA-Comp7	5/10/2010	5/13/2010	0.114 [3]
NESBA-S15 NESBA-S16	3/28/2010 3/28/2010	NESBA-Comp8	3/29/2010	3/30/2010	**2.575** [3]
NESBA-S15 (1') NESBA-S16 (1')	5/8/2010 5/8/2010	NESBA-Comp8	5/10/2010	5/13/2010	<0.0201 [1]
NESBA-SS1 NESBA-SS2	5/8/2010 5/8/2010	NESBA-Comp9	5/10/2010	5/13/2010	0.124 [3]
NESBA-SS3 NESBA-SS4	5/8/2010 5/8/2010	NESBA-Comp10	5/10/2010	5/13/2010	0.0382 [2]
NESBA-SS5 NESBA-SS6	5/8/2010 5/8/2010	NESBA-Comp11	5/10/2010	5/14/2010	0.0343 [2]
NESBA-SS7 NESBA-SS8	5/8/2010 5/8/2010	NESBA-Comp12	5/10/2010	5/14/2010	0.369 [3]
NESBA-SS9 NESBA-SS10	5/8/2010 5/8/2010	NESBA-Comp13	5/10/2010	5/13/2010	0.113 [3]
NESBA-SS11 NESBA-SS12	5/8/2010 5/8/2010	NESBA-Comp14	5/10/2010	5/13/2010	0.192 [3]
NESBA-SS13 NESBA-SS14	5/8/2010 5/8/2010	NESBA-Comp15	5/10/2010	5/13/2010	0.138 [3]
NESBA-SS15 NESBA-SS16	5/8/2010 5/8/2010	NESBA-Comp16	5/10/2010	5/13/2010	0.114 [3]
NESBA-SS15 NESBA-SS16	5/8/2010 5/8/2010	NESBA-Comp 17 (Dup of NESBA-Comp 16)	5/10/2010	5/14/2010	0.104 [3]

Table 3
Soil Sample Analytical Results
Wilcox Technical High School Demolition and Renovation Project
Meriden, Connecticut

Grab Sample ID	Date Collected	Composite Sample ID	Date Composited	Date Analyzed	Total PCBs (mg/kg)[1]
Northwest Side A Wing					
NWSBA-S1 NWSBA-S2	3/28/2010 3/28/2010	NWSBA-Comp1	3/29/2010	3/30/2010	**6.33** [3]
NWSBA-S1 (1') NWSBA-S2 (1')	5/8/2010 5/8/2010	NWSBA-Comp1	5/10/2010	5/13/2010	0.130 [3]
NWSBA-S3 NWSBA-S4	3/28/2010 3/28/2010	NWSBA-Comp2	3/29/2010	3/30/2010	**2.431** [3]
NWSBA-S3 (1') NWSBA-S4 (1')	5/8/2010 5/8/2010	NWSBA-Comp2	5/10/2010	5/13/2010	*0.713* [3]
NWSBA-S5 NWSBA-S6	3/28/2010 3/28/2010	NWSBA-Comp3	3/29/2010	3/30/2010	**4.400** [3]
NWSBA-S5 (1') NWSBA-S6 (1')	5/8/2010 5/8/2010	NWSBA-Comp3	5/10/2010	5/13/2010	0.0796 [2]
NWSBA-S7 NWSBA-S8	3/28/2010 3/28/2010	NWSBA-Comp4	3/29/2010	3/30/2010	**2.051** [3]
NWSBA-S7 (1') NWSBA-S8 (1')	5/8/2010 5/8/2010	NWSBA-Comp4	5/10/2010	5/13/2010	**1.76** [3]
NWSBA-S7 (1') NWSBA-S8 (1')	5/8/2010 5/8/2010	NWSBA-Comp26 (Dup of NWSBA-Comp4)	5/10/2010	5/14/2010	**8.13** [3]
NWSBA-S9 NWSBA-S10	3/28/2010 3/28/2010	NWSBA-Comp5	3/29/2010	3/30/2010	**4.79** [3]
NWSBA-S9 (1') NWSBA-S10 (1')	5/8/2010 5/8/2010	NWSBA-Comp5	5/10/2010	5/13/2010	0.459 [3]
NWSBA-S11 NWSBA-S12	3/28/2010 3/28/2010	NWSBA-Comp6	3/29/2010	3/31/2010	**17.8** [2]
NWSBA-S11 (1') NWSBA-S12 (1')	5/8/2010 5/8/2010	NWSBA-Comp6	5/10/2010	5/13/2010	0.0213 [2]
NWSBA-S13 NWSBA-S14	3/28/2010 3/28/2010	NWSBA-Comp7	3/29/2010	3/30/2010	**3.81** [3]
NWSBA-S13 (1') NWSBA-S14 (1')	5/8/2010 5/8/2010	NWSBA-Comp7	5/10/2010	5/13/2010	0.246 [3]
NWSBA-S15 NWSBA-S16	3/28/2010 3/28/2010	NWSBA-Comp8	3/29/2010	3/30/2010	**6.57** [3]
NWSBA-S15 (1') NWSBA-S16 (1')	5/8/2010 5/8/2010	NWSBA-Comp8	5/10/2010	5/13/2010	<0.0218 [1]
NWSBA-S17 NWSBA-S18	3/28/2010 3/28/2010	NWSBA-Comp9	3/29/2010	3/31/2010	**15.6** [2]
NWSBA-S17 (1') NWSBA-S18 (1')	5/8/2010 5/8/2010	NWSBA-Comp9	5/10/2010	5/13/2010	0.0732 [2]
NWSBA-S19 NWSBA-S20	3/28/2010 3/28/2010	NWSBA-Comp10	3/29/2010	3/31/2010	**8.81** [3]
NWSBA-S19 (1') NWSBA-S20 (1')	5/8/2010 5/8/2010	NWSBA-Comp10	5/10/2010	5/13/2010	0.256 [3]
NWSBA-S21 NWSBA-S22	3/28/2010 3/28/2010	NWSBA-Comp11	3/29/2010	3/30/2010	**4.41** [3]
NWSBA-S21 (1') NWSBA-S22 (1')	5/8/2010 5/8/2010	NWSBA-Comp11	5/10/2010	5/14/2010	**9.31** [3]
NWSBA-S23 NWSBA-S24	3/28/2010 3/28/2010	NWSBA-Comp12	3/29/2010	3/30/2010	**2.084** [3]
NWSBA-S23 (1') NWSBA-S24 (1')	5/8/2010 5/8/2010	NWSBA-Comp12	5/10/2010	5/13/2010	**1.95** [3]
NWSBA-SS1 NWSBA-SS2	5/8/2010 5/8/2010	NWSBA-Comp13	5/10/2010	5/13/2010	*0.528* [3]

Table 3
Soil Sample Analytical Results
Wilcox Technical High School Demolition and Renovation Project
Meriden, Connecticut

Grab Sample ID	Date Collected	Composite Sample ID	Date Composited	Date Analyzed	Total PCBs (mg/kg)[1]
Northwest Side A Wing (continued)					
NWSBA-SS3 NWSBA-SS4	5/8/2010 5/8/2010	NWSBA-Comp14	5/10/2010	5/13/2010	**1.25** [3]
NWSBA-SS5 NWSBA-SS6	5/8/2010 5/8/2010	NWSBA-Comp15	5/10/2010	5/13/2010	*0.838* [3]
NWSBA-SS7 NWSBA-SS8	5/8/2010 5/8/2010	NWSBA-Comp16	5/10/2010	5/13/2010	**1.36** [3]
NWSBA-SS9 NWSBA-SS10	5/8/2010 5/8/2010	NWSBA-Comp17	5/10/2010	5/13/2010	*0.916* [3]
NWSBA-SS11 NWSBA-SS12	5/8/2010 5/8/2010	NWSBA-Comp18	5/10/2010	5/13/2010	*0.596* [3]
NWSBA-SS13 NWSBA-SS14	5/8/2010 5/8/2010	NWSBA-Comp19	5/10/2010	5/13/2010	0.306 [3]
NWSBA-SS15 NWSBA-SS16	5/8/2010 5/8/2010	NWSBA-Comp20	5/10/2010	5/13/2010	*0.793* [3]
NWSBA-SS17 NWSBA-SS18	5/8/2010 5/8/2010	NWSBA-Comp21	5/10/2010	5/13/2010	0.222 [3]
NWSBA-SS19 NWSBA-SS20	5/8/2010 5/8/2010	NWSBA-Comp22	5/10/2010	5/14/2010	*0.639* [3]
NWSBA-SS21 NWSBA-SS22	5/8/2010 5/8/2010	NWSBA-Comp23	5/10/2010	5/14/2010	*0.640* [3]
NWSBA-SS23 NWSBA-SS24	5/8/2010 5/8/2010	NWSBA-Comp24	5/10/2010	5/14/2010	0.293 [3]
NWSBA-SS25 NWSBA-SS26	5/8/2010 5/8/2010	NWSBA-Comp25 (Dup of NWSBA-Comp24)	5/10/2010	5/14/2010	0.303 [3]
North Side B Wing					
NS-BB-S1 NS-BB-S2	3/28/2010 3/28/2010	NSBB Comp 1	3/29/2010	3/30/2010	**2.549** [3]
NS-BB-SS1 NS-BB-SS2	5/8/2010 5/8/2010	NS-BB-Comp1	5/10/2010	5/14/2010	0.0588 [2]
NS-BB-S1 (1') NS-BB-S2 (1')	5/8/2010 5/8/2010	NS-BB-Comp2	5/10/2010	5/14/2010	0.106 [3]
NS-BB-S3 NS-BB-S4	3/28/2010 3/28/2010	NSBB-Comp2	3/29/2010	3/30/2010	0.431 [3]
NS-BB-S5	3/28/2010	NA	NA	4/21/2010	**1.018** [3]
NS-BB-SS5	5/8/2010	NA	NA	5/13/2010	<0.0243 [1]
NS-BB -S5(1')	5/8/2010	NA	NA	5/13/2010	<0.0204 [1]
NS-BB-SS1E	5/8/2010	NA	NA	5/13/2010	**1.092** [3]
NS-BB-S6	3/28/2010	NA	NA	4/21/2010	0.027 [2]
South Side C Wing					
SS-BC-S7 SS-BC-S8	3/28/2010 3/28/2010	NA NA	NA NA	3/31/2010 3/31/2010	0.879 0.101
SS-BC-S9	5/8/2010	NA	NA	3/30/2010	0.134

Notes: 15.0 grams of each grab sample was added to each composite sample.
Remedial standard of <1 mg/kg is the Residential Direct Exposure Criteria from Section 22a-133k-1 through 22a-133k-3 of the State of Connecticut Regulation of Department of Environmental Protection concerning Remediation Standard and the High Occupancy area with no further conditions standard from §761.61(a)(4)(A).
Grab sample results were compared directly to the applicable remedial standards.
Composite sample results were compared to the applicable remedial standards by assuming that PCBs all came from one of the two samples included in the composite.
Thus, composite sample results were multiplied by two to determine compliance.
All sample results exceeding the remedial standard of 1.0 mg/kg are in bold.
All composite sample results exceeding 0.5 mg/kg indicating possible exceedance are in italic.

[1] Total PCBs listed in this table represent the sum of the individual analyte concentrations greater than the Reportable Detection Limits (RDLs). Total PCBs listed as less than a specified concentration represent the RDL for each individual analyte, and do not represent the sum of the individual analyte RDLs.

[2] Total PCBs = Aroclor 1254.

[3] Total PCBs = Aroclor 1254 & Aroclor 1260.

[4] Total PCBs = Aroclor 1260.

Table 4
Quantification of Materials to be Abated and Verification Sample Estimate
H.C. Wilcox Technical High School
Meriden, Connecticut

Removal Location	Comments	Caulk	Glazing	Verification Samples
A-Wing				
Front Entry	Removal of caulk and glazing around three entry doors and windows above	C2 – Approximately 30 linear feet of caulk around perimeter of doors and windows in contact with building materials DC1 – Approximately 10 linear feet of caulk around door	G1 – Approximately 60 linear feet of glazing around perimeter of windows in contact with window frame	One for porous materials in contact with C2 One for porous materials in contact with DC1 Two wipe samples within containment
Northwest Curtain Wall	Removal of 240 linear feet of curtain wall	C2 – Approximately 720 linear feet of caulk in contact with curtain wall only	G1 and IG1 – Approximately 2,400 linear feet of glazing around perimeter of windows in contact with window frame only	None – it is anticipated that the entire curtain wall in which C2 is in contact will be removed and disposed
Northeast Curtain Wall	Removal of 180 linear feet of curtain wall	C2 – Approximately 540 linear feet of caulk in contact with curtain wall only	G1 and IG1 – Approximately 1,700 linear feet of glazing around perimeter of windows in contact with window frame only	None – it is anticipated that the entire curtain wall in which C2 is in contact will be removed and disposed
External Expansion Joints	Removal of caulk from three vertical expansion joints at curtain walls	C2 – Approximately 75 linear feet of caulk in contact with curtain wall and other building materials	None	Four for porous materials in contact with C2 on either side of the expansion joint Three wipe samples from within three containments
B-Wing				
Interior Doors	Removal of caulk from five doors	IDC3 – Approximately 150 linear feet of caulk in contact with door frame and other building materials	None	Three for porous materials in contact with IDC3 Five wipe samples from within five containments
Interior Expansion Joints	Removal of caulk from thirteen interior vertical expansion joints	IE1 – Approximately 120 linear feet of caulk in eight separate joints in contact with building materials IE2 – Approximately 65 linear feet of caulk in five separate joints in contact with building materials IC4 – Approximately 10 linear feet of caulk from the base of the exterior window, Plumbing Theory room to the ceiling	None	Six for porous materials in contact with IE1 on either side of the joint Four for porous materials in contact with IE2 on either side of the joint One for porous materials in contact with IC4 Thirteen wipe samples from within thirteen containments
Windows	Removal of 255 linear feet of windows along the north and east side of building	None	G1 and IG1 – Approximately 1,000 linear feet of glazing around perimeter of windows in contact with window frame only	No porous material sampling Five wipe samples from within five containments

Table 4
Quantification of Materials to be Abated and Verification Sample Estimate
H.C. Wilcox Technical High School
Meriden, Connecticut

Removal Location	Comments	Caulk	Glazing	Verification Samples
B-Wing (continued)				
Windows	Removal of 110 linear feet of windows along the north, south, and the northwest and southwest corners of building	C7 – Approximately 150 linear feet of caulk in contact with window frame and building materials	G1 and IG1 – Approximately 425 linear feet of glazing around perimeter of windows in contact with window frame only	Three for porous materials in contact with C7 Three wipe samples from within three containments
C-Wing				
Windows	Removal of 235 linear feet of windows along the north and south sides of building	None	IG1 – Approximately 2,300 linear feet of glazing around perimeter of windows in contact with window frame only	No porous material sampling. 26 wipe samples from within 13 to 26 containments
Entry Doors	Removal of caulk from five doors	DC1 – Approximately 70 linear feet of caulk in contact with door frame and other building materials DC2 – Approximately 115 linear feet of caulk in contact with door frame and other building materials	None	Two for porous materials in contact with DC1 Three for porous materials in contact with DC2 Five wipe samples from within five containments
Exterior Expansion Joints	Removal of caulk from ten exterior vertical expansion joints on south side of building	C7 – Approximately 250 linear feet of caulk in contact with concrete and window frames	None	Ten for porous materials in contact with C7 (number may be reduced following window removal and field-determined reduction of porous materials in contact with C7 Ten wipe samples from within ten containments
Boiler Room				
Window	Removal of 10 linear feet of windows on the east side of the boiler room	None	G1 and IG1 – Approximately 35 linear feet of glazing around perimeter of windows in contact with window frame only	None One wipe sample from within one containment

Notes: All removals of PCB Bulk Product Wastes in contact with building materials discussed assume removal of six inches of the building materials in contact with the PCB Waste except for IE1 and IE2 in B-Wing where 12 inches of the building materials will be removed.
It is assumed that the entire curtain wall will be removed from the northeast and northwest sides of the A-Wing.
For glazings, it is assumed that the window and the window frame will be removed and there will be no porous building materials remaining that were in contact with the glazing. Thus, no verification sampling will be performed.
For door caulks, it is assumed that the door frame will be removed with the caulk and that the only remaining porous building materials formerly in contact with the caulk will be those surrounding the outside of the door frame.

FIGURES

DPW Project Number: BI-RT-843
Appendix #3
Addendum #6

J:\CAD\170053\
Fig-1.dwg Layout:FIG-1 April 28, 2010-2:31PM Raloma

STATE OF CONNECTICUT
DEPARTMENT OF PUBLIC WORKS

DRAWING PREPARED BY: TRC 21 Griffin Road North Windsor, CT 06095	DATE: 04-28-10
	SCALE: 1"=20'
PROJECT: **FIGURE 1** SITE AERIAL **H.C. WILCOX TECHNICAL HIGH MERIDEN, CONNECTICUT**	DRAWN BY: REA
	APPROVED BY: EP
PROJECT NO: BI-RC-843 (ASB)	DRAWING NO.: FIG-1

APPENDIX A

Non-Federally Regulated PCB-Containing Building Materials Scope of Work

The location of those materials classified as Excluded PCB Products with total PCB concentrations ≥1 mg/kg and <50 mg/kg based upon sample results of homogenous material are shown on Figure A1 and a description of the caulks and glazings is found in Table 1.

All caulks and glazings ≥1 mg/kg and <50 mg/kg shall be removed, without the removal of associated building substrates to start, utilizing the same engineering controls described for interior and exterior removals within this document. Following the removal of these caulks and glazings, the following actions will be performed:

- Verification samples will be collected at a frequency of 1 per every 50 linear feet of homogenous caulk or glazing removed. For example, IDC8 is a door caulk found within around interior doors in the B-Wing with a total PCB concentration of 1.57 mg/kg. For every 50 linear feet of IDC8 removed there will be one verification sample collected instead of one per every doorway.
- If the verification sample is <1 mg/kg then no further action will be performed.
- If the verification sample is ≥1 mg/kg then one of the following two actions will be performed:
  - Six-inches of building materials will be removed from either side of the caulk for areas that are within the demolition/renovation area of the project.
  - Building materials will be encapsulated using materials and procedures that conform to the attachment included in this appendix.
- The containment area will be cleaned with either wet wiping of HEPA vacuums to remove all dust from the area
- One wipe sample will be collected within each containment following cleaning of the area. If the analytical result for the wipe sample is <1.0 µg/100 cm^2 total PCBs then the area will be considered suitable for reoccupancy. If the wipe sample result is ≥1.0 µg/100 cm^2 then the area will be recleaned and retested to determine if it is suitable for reoccupancy.

APPENDIX B

Analytical Data Reports

DPW Project Number: BI-RT-843
Appendix #3
Addendum #6

TRC
21 GRIFFIN RD NORTH
WINDSOR, CONNECTICUT 06095
TELEPHONE (860) 298-9692
FAX (860) 298-6399

CHAIN OF CUSTODY

LAB ID #.

PROJECT NUMBER	PROJECT NAME
173781.0003.0000	DPW: Wilcox Tech., Meriden, CT
INSPECTOR: (SIGNATURE)	(PRINTED) Jennifer Peshka

PARAMETERS

TURNAROUND TIME

PLM:		24hr		48hr		3day		5day
TEM:		24hr		48hr		3day		5day

TEMP N 21.5°

FIELD SAMPLE NUMBER	DATE	TIME	TYPE COMP	TYPE GRAB	MATERIAL	EPA 8082 (3540)					
C1	12/30/09			X	Exterior grey over beige expansion joint caulk	X					
G1	12/30/09			X	Exterior white brittle window glazing	X					
C2	12/30/09			X	Exterior silver caulk along window & brick wall	X					
G2	12/30/09			X	Exterior black sticky glazing on replacement window	X					
C3	12/30/09			X	Exterior white pliable caulk on window wall panels	X					
C4	12/30/09			X	Exterior hard brown caulk along brick	X					
DC1	12/30/09			X	Exterior white/grey hard door caulk over foam	X					
DC2	12/30/09			X	Exterior grey pliable door caulk	X					
C5	12/30/09			X	Exterior black/grey caulk along window sill	X					

Relinquished by: (Signature)	Date:	Received by: (Signature)	Relinquished by: (Signature)	Date:	Received by: (Signature)
(Printed) Jennifer Peshka	Time:	(Printed) Robert Pellegrino	(Printed) Robert Pellegrino	Time: 1600	(Printed)
Remarks:					Page 1 of 5

DPW Project Number: BI-RT-843
Appendix #3
Addendum #6

TRC
21 GRIFFIN RD NORTH
WINDSOR, CONNECTICUT 06095
TELEPHONE (860) 298-9692
FAX (860) 298-6399

CHAIN OF CUSTODY

LAB ID #.

PROJECT NUMBER	PROJECT NAME	PARAMETERS	TURNAROUND TIME							
173781.0003.0000	DPW: Wilcox Tech., Meriden, CT		PLM:		24hr		48hr		3day		5day
			TEM:		24hr		48hr		3day		5day
INSPECTOR: (SIGNATURE)	(PRINTED) Jennifer Peshka									

TEMP N 2/5

FIELD SAMPLE NUMBER	DATE	TIME	TYPE COMP	TYPE GRAB	MATERIAL	EPA 8082 (3540)					
G3	12/30/09			X	Exterior hard clear over soft grey window glazing	X					
C6	12/30/09			X	Exterior white pliable around a/c unit	X					
C7	12/30/09			X	Exterior grey pliable caulk between window panel and concrete	X					
G4	12/30/09			X	Exterior black sticky glazing on window wall panels	X					
DC8	12/30/09			X	Exterior hard grey door caulk	X					
C8	12/30/09			X	Exterior light grey hard caulk along window and brick	X					
DC9	12/30/09			X	Exterior dark brown pliable door caulk	X					
C9	12/30/09			X	Exterior white hard caulk around corner wall guards by garage doors	X					
C10	12/30/09			X	Exterior white soft expansion joint caulk	X					

Relinquished by: (Signature)	Date:	Received by: (Signature)	Relinquished by: (Signature)	Date:	Received by: (Signature)
		1-5-10 1300		1-5-10	R Blake Jr
(Printed) Jennifer Peshka	Time:	(Printed) Robert Percamber	(Printed) Robert Percamber	Time: 1600	(Printed) R Blake Jr
Remarks:					

TRC
21 GRIFFIN RD NORTH
WINDSOR, CONNECTICUT 06095
TELEPHONE (860) 298-9692
FAX (860) 298-6399

CHAIN OF CUSTODY

LAB ID #.

PROJECT NUMBER	PROJECT NAME
173781.0003.0000	DPW: Wilcox Tech., Meriden, CT
INSPECTOR: (SIGNATURE)	(PRINTED) Jennifer Peshka

PARAMETERS

TURNAROUND TIME

PLM:		24hr		48hr		3day		5day
TEM:		24hr		48hr		3day		5day

TEMP N 21.5°

FIELD SAMPLE NUMBER	DATE	TIME	TYPE COMP	TYPE GRAB	MATERIAL	EPA 8082 (3540)				
DC10	12/30/09			X	Exterior white powdery pliable door caulk	X				
DC11	12/30/09			X	Exterior hard white thick door caulk	X				
DC12	12/30/09			X	Exterior brown soft pliable door caulk	X				
C11	12/30/09			X	Exterior hard grey caulk between window and brick	X				
IG1	12/31/09			X	Hard grey window glazing	X				
IDC1	12/31/09			X	Hard grey/tan thin bead door caulk	X				
IC1	12/31/09			X	White pliable caulk around A/C units	X				
IDC2	12/31/09			X	Off white pliable door caulk	X				
IC2	12/31/09			X	White pliable soffit caulk	X				
IG2	12/31/09			X	Window wall panel glazing	X				
IE1	12/31/09			X	Beige pliable expansion joint caulk	X				

Relinquished by: (Signature)	Date:	Received by: (Signature)	Relinquished by: (Signature)	Date:	Received by: (Signature)
		1-5-10		1-5-10	R Blala Jr
(Printed) Jennifer Peshka	Time:	(Printed) 1300 Robert Pendergast	(Printed) Robert Pendergast	Time: 1600	(Printed) R Blala Jr

Remarks:

DPW Project Number: BI-RT-843
Appendix #3
Addendum #6

TRC
21 GRIFFIN RD NORTH
WINDSOR, CONNECTICUT 06095
TELEPHONE (860) 298-9692
FAX (860) 298-6399

CHAIN OF CUSTODY

LAB ID #.

PROJECT NUMBER	PROJECT NAME	PARAMETERS	TURNAROUND TIME							
173781.0003.0000	DPW: Wilcox Tech., Meriden, CT		PLM:		24hr		48hr		3day		5day
			TEM:		24hr		48hr		3day		5day
INSPECTOR: (SIGNATURE)	(PRINTED) Jennifer Peshka									

FIELD SAMPLE NUMBER	DATE	TIME	TYPE COMP	TYPE GRAB	MATERIAL	EPA 8082 (3540)					
											TBM N 71.50
IE2	12/31/09			X	Grey rubber expansion joint caulk over foam	X					
IDC3	12/31/09			X	Hard grey caulk around door	X					
IDC4	12/31/09			X	Thick hard dark grey caulk between door and window	X					
IDC5	12/31/09			X	White door caulk	X					
IG3	12/31/09			X	Black sticky interior window panel glazing	X					
IDC6	12/31/09			X	Dark brown pliable door caulk	X					
IDC7	12/31/09			X	Dark brown sticky door caulk	X					
IDC8	12/31/09			X	Off white pliable door caulk	X					
IDC9	12/31/09			X	Hard tan door caulk	X					
IC3	12/31/09			X	White pliable caulk around doors & expansion joints	X					

Relinquished by: (Signature)	Date:	Received by: (Signature)	Relinquished by: (Signature)	Date:	Received by: (Signature)
		1-5-10 1300		1-5-10	R Blake Jr
(Printed) Jennifer Peshka	Time:	(Printed) Robert Pergament	(Printed) Robert Pergament	Time: 1600	(Printed) R Blake Jr
Remarks:					Page 4 of 5

DPW Project Number: BI-RT-843
Appendix #3
Addendum #6

TRC
21 GRIFFIN RD NORTH
WINDSOR, CONNECTICUT 06095
TELEPHONE (860) 298-9692
FAX (860) 298-6399

CHAIN OF CUSTODY

LAB ID #.

PROJECT NUMBER	PROJECT NAME	PARAMETERS	TURNAROUND TIME
173781.0003.0000	DPW: Wilcox Tech., Meriden, CT		PLM: 24hr 48hr 3day 5day TEM: 24hr 48hr 3day 5day
INSPECTOR: (SIGNATURE)	(PRINTED) Jennifer Peshka		

TBMP N 21.5°

FIELD SAMPLE NUMBER	DATE	TIME	TYPE COMP	TYPE GRAB	MATERIAL	EPA 8082 (3540)					
IDC10	12/31/09			X	Soft grey door caulk	X					
IC4	12/31/09			X	Grey window caulk	X					
				X		X					
				X		X					
				X		X					
				X		X					
				X		X					
				X		X					
				X		X					
				X		X					
				X		X					

Relinquished by: (Signature)	Date:	Received by: (Signature)	Relinquished by: (Signature)	Date:	Received by: (Signature)
(Printed) Jennifer Peshka	Time:	(Printed) Robert Perchamas 1-5-10 1300	(Printed) Robert Perchamas 1-5-10 1600	Time:	(Printed) R Blala Jr
Remarks:					

DPW Project Number: BI-RT-843
Appendix #3
Addendum #6

TRC

21 GRIFFIN ROAD NORTH
WINDSOR, CONNECTICUT 06095
TELEPHONE (860) 298-9692
FAX (860) 298-6380

Edition: September 2
Supersede Previous Editi

CHAIN OF CUSTODY

TEMP N 22.8

LAB ID #.

PROJECT NUMBER	PROJECT NAME	PARAMETERS	TURNAROUND TIME
173781.0003.0000	DPW: Wilcox Tech, Meriden		24hr / 48hr / 3day / 5day; 24hr / 48hr / 3day / 5day
SIGNATURE	INSPECTOR		
	Jennifer Peshka		

FIELD SAMPLE NUMBER	DATE	TIME	TYPE COMP	TYPE GRAB	~~SAMPLE LOCATION~~ Material	PCBS EPA 8082 (3540)					NOTES
1DC5	1/7/10			X	white doorcaulk	X					

Relinquished by: (Signature)	Date:	Received by: (Signature)	Relinquished by: (Signature)	Date:	Received by: (Signature)
	1/7/10			1-7-10	1-7-10
(Printed) Jennifer Peshka	Time: 1045	(Printed) Robert Pergamon	(Printed) Robert Pergamon	Time: 1350	(Printed) 13:50

Remarks: * this is the missing sample from chain submitted on 1/4/10

DPW Project Number: BI-RT-843
Appendix #3
Addendum #6

COMPLETE ENVIRONMENTAL TESTING, INC.

80 Lupes Drive
Stratford, CT 06615

Tel: (203) 377-9984
Fax: (203) 377-9952
e-mail: cet@cetlabs.com

January 25, 2010

Mr. Erik Plimpton
TRC Environmental Consultants
21 Griffin Rd., North
Windsor, CT 06095

Project: Wilcox Tech, Meriden
Project #: 173781.0003.0000
CET #: 10010046
Solid: C1; C10; C2; C3; C4; C5; C6; C7; C8; C9; DC1; DC2; DC8; DC9; G1; G2; G3; G4
Collection Date(s): 12/30/2009

PREP ANALYSIS:

Soxhlet Extraction [EPA 3540C]

Client ID	C1	G1	C2	G2	C3
CET ID	AE29039	AE29040	AE29041	AE29042	AE29043
Date Analyzed	1/14/2010	1/14/2010	1/14/2010	1/14/2010	1/14/2010

Soxhlet Extraction [EPA 3540C]

Client ID	C4	DC1	DC2	C5	G3
CET ID	AE29044	AE29045	AE29046	AE29047	AE29048
Date Analyzed	1/14/2010	1/14/2010	1/14/2010	1/14/2010	1/15/2010

Soxhlet Extraction [EPA 3540C]

Client ID	C6	C7	G4	DC8	C8
CET ID	AE29049	AE29050	AE29051	AE29052	AE29053
Date Analyzed	1/15/2010	1/15/2010	1/15/2010	1/15/2010	1/15/2010

NOTES:
ND is Not Detected.

Connecticut Laboratory Certification PH 0116
Massachusetts Laboratory Certification M-CT903
Rhode Island Laboratory Certification 199

Soxhlet Extraction [EPA 3540C]

Client ID	DC9	C9	C10
CET ID	AE29054	AE29055	AE29056
Date Analyzed	1/15/2010	1/15/2010	1/15/2010

ANALYSIS:

EPA 8082 PCBs [EPA 8082] Units: mg/kg (Dry Wt)

Client ID	C1	G1	C2	G2	C3
CET ID	AE29039	AE29040	AE29041	AE29042	AE29043
Date Analyzed	1/22/2010	1/22/2010	1/22/2010	1/22/2010	1/22/2010
Dilution	40.0	1000.0	100000.0	40.0	40.0
PCB-1016	ND < 10	ND < 250	ND < 25000	ND < 10	ND < 10
PCB-1221	ND < 10	ND < 250	ND < 25000	ND < 10	ND < 10
PCB-1232	ND < 10	ND < 250	ND < 25000	ND < 10	ND < 10
PCB-1242	ND < 10	ND < 250	ND < 25000	ND < 10	ND < 10
PCB-1248	ND < 10	ND < 250	ND < 25000	ND < 10	ND < 10
PCB-1254	39	1200	320000E	15	23
PCB-1260	ND < 10	ND < 250	ND < 25000	ND < 10	ND < 10
TCMX (Surr 1)	+	+	+	+	+
DCB (Surr 2)	+	+	+	+	+

EPA 8082 PCBs [EPA 8082] Units: mg/kg (Dry Wt)

Client ID	C4	DC1	DC2	C5	G3
CET ID	AE29044	AE29045	AE29046	AE29047	AE29048
Date Analyzed	1/22/2010	1/22/2010	1/22/2010	1/22/2010	1/22/2010
Dilution	2.0	1000.0	10000.0	10.0	10.0
PCB-1016	ND < 0.50	ND < 250	ND < 2500	ND < 2.5	ND < 2.5
PCB-1221	ND < 0.50	ND < 250	ND < 2500	ND < 2.5	ND < 2.5
PCB-1232	ND < 0.50	ND < 250	ND < 2500	ND < 2.5	ND < 2.5
PCB-1242	ND < 0.50	ND < 250	ND < 2500	ND < 2.5	ND < 2.5
PCB-1248	ND < 0.50	ND < 250	ND < 2500	ND < 2.5	ND < 2.5
PCB-1254	1.1	2000E	57000E	ND < 2.5	4.3
PCB-1260	ND < 0.50	ND < 250	ND < 2500	ND < 2.5	ND < 2.5
TCMX (Surr 1)	42	+	+	+	+
DCB (Surr 2)	72	+	+	+	+

EPA 8082 PCBs [EPA 8082] Units: mg/kg (Dry Wt)

Client ID	C6	C7	G4	DC8	C8
CET ID	AE29049	AE29050	AE29051	AE29052	AE29053
Date Analyzed	1/22/2010	1/22/2010	1/22/2010	1/23/2010	1/23/2010
Dilution	8.0	5000.0	2.0	2.0	20.0
PCB-1016	ND < 2.0	ND < 1250	ND < 0.50	ND < 0.50	ND < 5.0
PCB-1221	ND < 2.0	ND < 1250	ND < 0.50	ND < 0.50	ND < 5.0
PCB-1232	ND < 2.0	ND < 1250	ND < 0.50	ND < 0.50	ND < 5.0
PCB-1242	ND < 2.0	ND < 1250	ND < 0.50	ND < 0.50	ND < 5.0

Notes:
ND is Not Detected.

Project#: 173781.0003.0000
Cet#: 10010046
Project: Wilcox Tech, Meriden

January 25, 2010

EPA 8082 PCBs [EPA 8082] Units: mg/kg (Dry Wt)

Client ID	C6	C7	G4	DC8	C8
PCB-1248	ND < 2.0	ND < 1250	ND < 0.50	ND < 0.50	ND < 5.0
PCB-1254	9.7	21000E	2.3	1.5	13
PCB-1260	ND < 2.0	ND < 1250	ND < 0.50	ND < 0.50	10
TCMX (Surr 1)	+	+	34	79	+
DCB (Surr 2)	+	+	31	98	+

EPA 8082 PCBs [EPA 8082] Units: mg/kg (Dry Wt)

Client ID	DC9	C9	C10
CET ID	AE29054	AE29055	AE29056
Date Analyzed	1/23/2010	1/23/2010	1/23/2010
Dilution	2.0	2.0	20.0
PCB-1016	ND < 0.50	ND < 0.50	ND < 5.0
PCB-1221	ND < 0.50	ND < 0.50	ND < 5.0
PCB-1232	ND < 0.50	ND < 0.50	ND < 5.0
PCB-1242	ND < 0.50	ND < 0.50	ND < 5.0
PCB-1248	ND < 0.50	ND < 0.50	ND < 5.0
PCB-1254	1.8	ND < 0.50	19
PCB-1260	ND < 0.50	ND < 0.50	ND < 5.0
TCMX (Surr 1)	86	52	+
DCB (Surr 2)	99	57	+

+ Surrogate diluted out.

Assumed 100% total solids for all samples.

Sincerely,

David Ditta
Laboratory Director

Notes:
ND is Not Detected.

DPW Project Number: BI-RT-843
Appendix #3
Addendum #6

COMPLETE ENVIRONMENTAL TESTING, INC.

80 Lupes Drive
Stratford, CT 06615

Tel: (203) 377-9984
Fax: (203) 377-9952
e-mail: cet@cetlabs.com

January 21, 2010

Mr. Erik Plimpton
TRC Environmental Consultants
21 Griffin Rd., North
Windsor, CT 06095

Project: Wilcox Tech, Meriden
Project #: 173781.0003.0000
CET #: 10010047
Solid: C11; DC10; DC11; DC12; IC1; IC2; IC3; IC4; IDC1; IDC10; IDC2; IDC3; IDC4; IDC6; IDC7; IDC8; IDC9; IE1; IE2; IG1; IG2; IG3
Collection Date(s): 12/30/2009; 12/31/2009

PREP ANALYSIS:

Soxhlet Extraction [EPA 3540C]

Client ID	DC10	DC11	DC12	C11	IG1
CET ID	AE29057	AE29058	AE29059	AE29060	AE29061
Date Analyzed	1/13/2010	1/13/2010	1/13/2010	1/13/2010	1/13/2010

Soxhlet Extraction [EPA 3540C]

Client ID	IDC1	IC1	IDC2	IC2	IG2
CET ID	AE29062	AE29063	AE29064	AE29065	AE29066
Date Analyzed	1/13/2010	1/13/2010	1/13/2010	1/13/2010	1/13/2010

Soxhlet Extraction [EPA 3540C]

Client ID	IE1	IE2	IDC3	IDC4	IG3
CET ID	AE29067	AE29068	AE29069	AE29070	AE29071
Date Analyzed	1/13/2010	1/13/2010	1/13/2010	1/13/2010	1/13/2010

Soxhlet Extraction [EPA 3540C]

Client ID	IDC6	IDC7	IDC8	IDC9	IC3
CET ID	AE29072	AE29073	AE29074	AE29075	AE29076
Date Analyzed	1/13/2010	1/14/2010	1/14/2010	1/14/2010	1/14/2010

NOTES:
ND is Not Detected.

Soxhlet Extraction [EPA 3540C]

Client ID	IDC10	IC4
CET ID	AE29077	AE29078
Date Analyzed	1/14/2010	1/14/2010

ANALYSIS:

EPA 8082 PCBs [EPA 8082] Units: mg/kg (Dry Wt)

Client ID	DC10	DC11	DC12	C11	IG1
CET ID	AE29057	AE29058	AE29059	AE29060	AE29061
Date Analyzed	1/20/2010	1/20/2010	1/20/2010	1/20/2010	1/20/2010
Dilution	2.0	10.0	2.0	20.0	200.0
PCB-1016	ND < 0.50	ND < 2.5	ND < 0.50	ND < 5.0	ND < 50
PCB-1221	ND < 0.50	ND < 2.5	ND < 0.50	ND < 5.0	ND < 50
PCB-1232	ND < 0.50	ND < 2.5	ND < 0.50	ND < 5.0	ND < 50
PCB-1242	ND < 0.50	ND < 2.5	ND < 0.50	ND < 5.0	ND < 50
PCB-1248	ND < 0.50	ND < 2.5	ND < 0.50	ND < 5.0	ND < 50
PCB-1254	ND < 0.50	8.5	1.9	7.5	200
PCB-1260	ND < 0.50	ND < 2.5	ND < 0.50	13	ND < 50
TCMX (Surr 1)	70	78	82	+	+
DCB (Surr 2)	63	85	75	+	+

EPA 8082 PCBs [EPA 8082] Units: mg/kg (Dry Wt)

Client ID	IDC1	IC1	IDC2	IC2	IG2
CET ID	AE29062	AE29063	AE29064	AE29065	AE29066
Date Analyzed	1/20/2010	1/20/2010	1/20/2010	1/20/2010	1/20/2010
Dilution	10.0	2.0	20.0	10.0	2.0
PCB-1016	ND < 2.5	ND < 0.50	ND < 5.0	ND < 2.5	ND < 0.50
PCB-1221	ND < 2.5	ND < 0.50	ND < 5.0	ND < 2.5	ND < 0.50
PCB-1232	ND < 2.5	ND < 0.50	ND < 5.0	ND < 2.5	ND < 0.50
PCB-1242	ND < 2.5	1.3	ND < 5.0	ND < 2.5	ND < 0.50
PCB-1248	ND < 2.5	ND < 0.50	ND < 5.0	ND < 2.5	ND < 0.50
PCB-1254	4.1	2.5	9.6	3.8	0.98
PCB-1260	ND < 2.5	ND < 0.50	ND < 5.0	ND < 2.5	ND < 0.50
TCMX (Surr 1)	95	86	+	88	91
DCB (Surr 2)	105	79	+	87	76

EPA 8082 PCBs [EPA 8082] Units: mg/kg (Dry Wt)

Client ID	IE1	IE2	IDC3	IDC4	IG3
CET ID	AE29067	AE29068	AE29069	AE29070	AE29071
Date Analyzed	1/20/2010	1/20/2010	1/20/2010	1/20/2010	1/20/2010
Dilution	10000.0	5000.0	100.0	8.0	2.0
PCB-1016	ND < 2500	ND < 1250	ND < 25	ND < 2.0	ND < 0.50
PCB-1221	ND < 2500	ND < 1250	ND < 25	ND < 2.0	ND < 0.50
PCB-1232	ND < 2500	ND < 1250	ND < 25	ND < 2.0	ND < 0.50
PCB-1242	ND < 2500	ND < 1250	ND < 25	ND < 2.0	ND < 0.50

Notes:
ND is Not Detected.

Project#: 173781.0003.0000
Cet#: 10010047
Project: Wilcox Tech, Meriden

January 21, 2010

EPA 8082 PCBs [EPA 8082] Units: mg/kg (Dry Wt)

Client ID	IE1	IE2	IDC3	IDC4	IG3
PCB-1248	ND < 2500	ND < 1250	ND < 25	ND < 2.0	ND < 0.50
PCB-1254	12000	16000E	28	3.2	ND < 0.50
PCB-1260	ND < 2500	ND < 1250	34	ND < 2.0	ND < 0.50
TCMX (Surr 1)	+	+	+	80	49
DCB (Surr 2)	+	+	+	95	36

EPA 8082 PCBs [EPA 8082] Units: mg/kg (Dry Wt)

Client ID	IDC6	IDC7	IDC8	IDC9	IC3
CET ID	AE29072	AE29073	AE29074	AE29075	AE29076
Date Analyzed	1/20/2010	1/20/2010	1/20/2010	1/20/2010	1/21/2010
Dilution	8.0	2.0	2.0	8.0	2.0
PCB-1016	ND < 2.0	ND < 0.50	ND < 0.50	ND < 2.0	ND < 0.50
PCB-1221	ND < 2.0	ND < 0.50	ND < 0.50	ND < 2.0	ND < 0.50
PCB-1232	ND < 2.0	ND < 0.50	ND < 0.50	ND < 2.0	ND < 0.50
PCB-1242	ND < 2.0	ND < 0.50	ND < 0.50	ND < 2.0	ND < 0.50
PCB-1248	ND < 2.0	ND < 0.50	0.98	ND < 2.0	ND < 0.50
PCB-1254	6.2	1.3	0.59	6.1	1.5
PCB-1260	ND < 2.0	ND < 0.50	ND < 0.50	ND < 2.0	ND < 0.50
TCMX (Surr 1)	92	79	89	81	93
DCB (Surr 2)	135	122	89	91	88

EPA 8082 PCBs [EPA 8082] Units: mg/kg (Dry Wt)

Client ID	IDC10	IC4
CET ID	AE29077	AE29078
Date Analyzed	1/21/2010	1/21/2010
Dilution	2.0	100000.0
PCB-1016	ND < 0.50	ND < 25000
PCB-1221	ND < 0.50	ND < 25000
PCB-1232	ND < 0.50	ND < 25000
PCB-1242	1.8	ND < 25000
PCB-1248	ND < 0.50	ND < 25000
PCB-1254	1.8	71000
PCB-1260	ND < 0.50	ND < 25000
TCMX (Surr 1)	66	+
DCB (Surr 2)	64	+

+ Surrogate diluted out.

Assumed 100% Total Solids for all samples.

Sincerely,

David Ditta
Laboratory Director

Notes:
ND is Not Detected.

DPW Project Number: BI-RT-843
Appendix #3
Addendum #6

COMPLETE ENVIRONMENTAL TESTING, INC.

80 Lupes Drive
Stratford, CT 06615

Tel: (203) 377-9984
Fax: (203) 377-9952
e-mail: cet@cetlabs.com

January 20, 2010

Mr. Erik Plimpton
TRC Environmental Consultants
21 Griffin Rd., North
Windsor, CT 06095

Project: Wilcox Tech, Meriden
Project #: 173781.0003.0000
CET #: 10010094
Solid: IDC5
Collection Date(s): 1/7/2010

PREP ANALYSIS:

Soxhlet Extraction [EPA 3540C]

Client ID	IDC5
CET ID	AE29261
Date Analyzed	1/12/2010

ANALYSIS:

EPA 8082 PCBs [EPA 8082] Units: mg/kg (Dry Wt)

Client ID	IDC5
CET ID	AE29261
Date Analyzed	1/18/2010
Dilution	100.0
PCB-1016	ND < 25
PCB-1221	ND < 25
PCB-1232	ND < 25
PCB-1242	ND < 25
PCB-1248	ND < 25

NOTES:
ND is Not Detected.

EPA 8082 PCBs [EPA 8082] Units: mg/kg (Dry Wt)

Client ID	IDC5
PCB-1254	38
PCB-1260	ND < 25
TCMX (Surr 1)	+
DCB (Surr 2)	+

+ Surrogate diluted out.

Assumed 100% total solids.

Sincerely,

David Ditta
Laboratory Director

Notes:
ND is Not Detected.

Report Date:
31-Mar-10 14:19

☑ Final Report
☐ Re-Issued Report
☐ Revised Report

DPW Project Number: BI-RT-843
Appendix #3
Addendum #6

SPECTRUM ANALYTICAL, INC.
Featuring
HANIBAL TECHNOLOGY

Laboratory Report

TRC
21 Griffin Road North
Windsor, CT 06095
Attn: Malcolm Beeler

Project: Wilcox Technical High School - Meriden, CT
Project #: [none]

Laboratory ID	Client Sample ID	Matrix	Date Sampled	Date Received
SB09819-01	IBB-IF-BM9	Concrete	28-Mar-10 10:30	29-Mar-10 15:00
SB09819-02	IBB-IE-BM10	Concrete	28-Mar-10 10:55	29-Mar-10 15:00
SB09819-03	IBB-IE-BM11	Brick	28-Mar-10 11:15	29-Mar-10 15:00
SB09819-04	IBB-WC-BM7	Concrete	28-Mar-10 10:10	29-Mar-10 15:00
SB09819-05	IBB-IE-BM8	Concrete	28-Mar-10 10:20	29-Mar-10 15:00
SB09819-06	IBB-IF-BM12	Concrete	28-Mar-10 11:05	29-Mar-10 15:00
SB09819-07	AS Comp 1	Asphalt	29-Mar-10 10:30	29-Mar-10 15:00
SB09819-08	AS Comp 2	Asphalt	29-Mar-10 10:33	29-Mar-10 15:00
SB09819-09	AS Comp 3	Asphalt	29-Mar-10 10:36	29-Mar-10 15:00
SB09819-10	Sand Comp 1	Sand	28-Mar-10 10:40	29-Mar-10 15:00
SB09819-11	SWC-BB-BM1	Brick	28-Mar-10 15:35	29-Mar-10 15:00
SB09819-12	SWC-BB-BM2	Brick	28-Mar-10 15:50	29-Mar-10 15:00
SB09819-13	SS-BB-BM4	Brick	28-Mar-10 15:45	29-Mar-10 15:00
SB09819-14	SS-BB-BM3	Brick	28-Mar-10 15:45	29-Mar-10 15:00
SB09819-15	NWC-BB-A11	Concrete	28-Mar-10 16:45	29-Mar-10 15:00
SB09819-16	NWC-BB-BM6	Brick	28-Mar-10 16:50	29-Mar-10 15:00
SB09819-17	NWC-BB-BM5	Brick	28-Mar-10 16:40	29-Mar-10 15:00
SB09819-18	SS-BC-BM9	Concrete	28-Mar-10 17:55	29-Mar-10 15:00
SB09819-19	SS-BC-BM8	Concrete	28-Mar-10 17:45	29-Mar-10 15:00
SB09819-20	SS-BC-BM7	Brick	28-Mar-10 17:53	29-Mar-10 15:00
SB09819-21	SS-BC-BM21	Concrete	28-Mar-10 13:32	29-Mar-10 15:00
SB09819-22	SS-BC-BM22	Concrete	28-Mar-10 13:35	29-Mar-10 15:00
SB09819-23	SS-BC-BM23	Concrete	28-Mar-10 13:38	29-Mar-10 15:00
SB09819-24	SS-BC-S7	Soil	28-Mar-10 17:00	29-Mar-10 15:00
SB09819-25	SS-BC-S8	Soil	28-Mar-10 17:05	29-Mar-10 15:00
SB09819-26	SS-BC-S9	Soil	28-Mar-10 17:10	29-Mar-10 15:00
SB09819-27	SEC-BA-A2	Asphalt	28-Mar-10 08:15	29-Mar-10 15:00
SB09819-28	SWC-BB-A Comp	Asphalt	29-Mar-10 13:10	29-Mar-10 15:00
SB09819-29	SS-BB-A Comp	Concrete	29-Mar-10 13:15	29-Mar-10 15:00
SB09819-30	NWSBA Comp 1	Soil	29-Mar-10 12:00	29-Mar-10 15:00
SB09819-31	NWSBA Comp 2	Soil	29-Mar-10 12:05	29-Mar-10 15:00
SB09819-32	NWSBA Comp 3	Soil	29-Mar-10 12:12	29-Mar-10 15:00
SB09819-33	NWSBA Comp 4	Soil	29-Mar-10 12:20	29-Mar-10 15:00
SB09819-34	NWSBA Comp 5	Soil	29-Mar-10 12:25	29-Mar-10 15:00
SB09819-35	NWSBA Comp 6	Soil	29-Mar-10 12:28	29-Mar-10 15:00
SB09819-36	NWSBA Comp 7	Soil	29-Mar-10 12:35	29-Mar-10 15:00
SB09819-37	NWSBA Comp 8	Soil	29-Mar-10 12:40	29-Mar-10 15:00

SB09819-38	NWSBA Comp 9	Soil	29-Mar-10 12:44	29-Mar-10 15:00
SB09819-39	NWSBA Comp 10	Soil	29-Mar-10 12:50	29-Mar-10 15:00
SB09819-40	NWSBA Comp 11	Soil	29-Mar-10 12:55	29-Mar-10 15:00
SB09819-41	NWSBA Comp 12	Soil	29-Mar-10 13:00	29-Mar-10 15:00
SB09819-42	FB032810	Ground Water	28-Mar-10 17:00	29-Mar-10 15:00
SB09819-43	NESBA Comp 1	Soil	29-Mar-10 13:20	29-Mar-10 15:00
SB09819-44	NESBA Comp 2	Soil	29-Mar-10 13:25	29-Mar-10 15:00
SB09819-45	NESBA Comp 3	Soil	29-Mar-10 13:30	29-Mar-10 15:00
SB09819-46	NESBA Comp 4	Soil	29-Mar-10 13:33	29-Mar-10 15:00
SB09819-47	NESBA Comp 5	Soil	29-Mar-10 13:35	29-Mar-10 15:00
SB09819-48	NESBA Comp 6	Soil	29-Mar-10 13:40	29-Mar-10 15:00
SB09819-49	NESBA Comp 7	Soil	29-Mar-10 13:43	29-Mar-10 15:00
SB09819-50	NESBA Comp 8	Soil	29-Mar-10 13:45	29-Mar-10 15:00
SB09819-51	NSBB Comp 1	Soil	29-Mar-10 13:50	29-Mar-10 15:00
SB09819-52	NSBB Comp 2	Soil	29-Mar-10 13:57	29-Mar-10 15:00
SB09819-53	NSBB Comp 3	Soil	29-Mar-10 14:05	29-Mar-10 15:00

I attest that the information contained within the report has been reviewed for accuracy and checked against the quality control requirements for each method. These results relate only to the sample(s) as received.
All applicable NELAC requirements have been met.

Massachusetts # M-MA138/MA1110
Connecticut # PH-0777
Florida # E87600/E87936
Maine # MA138
New Hampshire # 2538
New Jersey # MA011/MA012
New York # 11393/11840
Pennsylvania # 68-04426/68-02924
Rhode Island # 98
USDA # S-51435
Vermont # VT-11393

Authorized by:

Hanibal C. Tayeh, Ph.D.
President/Laboratory Director

Technical Reviewer's Initial:

Spectrum Analytical holds certification in the State of New York for the analytes as indicated with an X in the "Cert." column within this report. Please note that the State of New York does not offer certification for all analytes.
Please note that this report contains 41 pages of analytical data plus Chain of Custody document(s). When the Laboratory Report is indicated as revised, this report supersedes any previously dated reports for the laboratory ID(s) referenced above. Where this report identifies subcontracted analyses, copies of the subcontractor's test report are available upon request. This report may not be reproduced, except in full, without written approval from Spectrum Analytical, Inc.

Spectrum Analytical, Inc. is a NELAC accredited laboratory organization and meets NELAC testing standards. Use of the NELAC logo however does not insure that Spectrum is currently accredited for the specific method or analyte indicated. Please refer to our "Quality" web page at www.spectrum-analytical.com for a full listing of our current certifications and fields of accreditation. States in which Spectrum Analytical, Inc. holds NELAC certification are New York, New Hampshire, New Jersey and Florida. All analytical work for Volatile Organic and Air analysis are transferred to and conducted at our 830 Silver Street location (NY-11840, FL-E87936 and NJ-MA012).

Please contact the Laboratory or Technical Director at 800-789-9115 with any questions regarding the data contained in this laboratory report.

CASE NARRATIVE:

The samples were received 1.7 degrees Celsius, please refer to the Chain of Custody for details specific to temperature upon receipt. An infrared thermometer with a tolerance of +/- 2.0 degrees Celsius was used immediately upon receipt of the samples.

If a Matrix Spike (MS), Matrix Spike Duplicate (MSD) or Duplicate (DUP) was not requested on the Chain of Custody, method criteria may have been fulfilled with a source sample not of this Sample Delivery Group.

Required site-specific Matrix Spike/Matrix Spike Duplicate (MS/MSD) must be requested by the client and sufficient sample must be submitted for the additional analyses. Samples submitted with insufficient volume/weight will not be analyzed for site specific MS/MSD, however a batch MS/MSD may be analyzed from a non-site specific sample.

CTDEP has published a list of analytical methods which provides a series of recommended protocols for the acquisition, analysis and reporting of analytical data in support of decisions being made utilizing the Reasonable Confidence Protocol (RCP). "Reasonable Confidence" can be established only for those methods published by the CTDEP in the RCP guidelines. The compounds and/or elements reported were specifically requested by the client on the Chain of Custody and in some cases may not include the full analyte list as defined in the method.

The CTDEP RCP requests that "all non-detects and all results below the reporting limit are reported as ND (Not Detected at the Specified Reporting Limit)". All non-detects and all results below the reporting limit are reported as "BRL" (Below the Reporting Limit) in this report.

If no reporting limits were specified or referenced on the chain-of-custody the laboratory's practical quantitation limits were applied.

Tetrachloro-m-xylene is recommended as a surrogate by the CTDEP RCP for the following SW846 Methods 8081, 8082 and 8151. Spectrum Analytical, Inc. uses Tetrachloro-m-xylene as the Internal Standard for these methods and Dibromooctaflourobiphenyl as the surrogate.

See below for any non-conformances and issues relating to quality control samples and/or sample analysis/matrix.

SW846 8082

Samples:

SB09819-35 *NWSBA Comp 6*

The concentration indicated for this analyte is an estimated value. This value is considered an estimate (CLP E-flag).

Aroclor-1254
Aroclor-1260

SB09819-38 *NWSBA Comp 9*

The concentration indicated for this analyte is an estimated value. This value is considered an estimate (CLP E-flag).

Aroclor-1254
Aroclor-1260

SB09819-39 *NWSBA Comp 10*

The concentration indicated for this analyte is an estimated value. This value is considered an estimate (CLP E-flag).

Aroclor-1254

Sample Identification	Client Project #	Matrix	Collection Date/Time	Received
IBB-IF-BM9	[none]	Concrete	28-Mar-10 10:30	29-Mar-10
SB09819-01				

CAS No.	Analyte(s)	Result	Flag	Units	*RDL	Dilution	Method Ref.	Prepared	Analyzed	Analyst	Batch	Cert.
Semivolatile Organic Compounds by GC												
Polychlorinated Biphenyls by SW846 8082 Prepared by method SW846 3540C												
12674-11-2	Aroclor-1016	BRL		µg/kg dry	58.3	1	SW846 8082	29-Mar-10	31-Mar-10	TG	1006643	X
11104-28-2	Aroclor-1221	BRL		µg/kg dry	58.3	1	"	"	"	"	"	X
11141-16-5	Aroclor-1232	BRL		µg/kg dry	58.3	1	"	"	"	"	"	X
53469-21-9	Aroclor-1242	BRL		µg/kg dry	58.3	1	"	"	"	"	"	X
12672-29-6	Aroclor-1248	877		µg/kg dry	58.3	1	"	"	"	"	"	X
11097-69-1	Aroclor-1254	BRL		µg/kg dry	58.3	1	"	"	"	"	"	X
11096-82-5	Aroclor-1260	BRL		µg/kg dry	58.3	1	"	"	"	"	"	X
37324-23-5	Aroclor-1262	BRL		µg/kg dry	58.3	1	"	"	"	"	"	X
11100-14-4	Aroclor-1268	BRL		µg/kg dry	58.3	1	"	"	"	"	"	X
Surrogate recoveries:												
10386-84-2	*4,4-DB-Octafluorobiphenyl (Sr)*	*100*			*30-150 %*		"	"	"	"	"	
10386-84-2	*4,4-DB-Octafluorobiphenyl (Sr) [2C]*	*115*			*30-150 %*		"	"	"	"	"	
2051-24-3	*Decachlorobiphenyl (Sr)*	*110*			*30-150 %*		"	"	"	"	"	
2051-24-3	*Decachlorobiphenyl (Sr) [2C]*	*110*			*30-150 %*		"	"	"	"	"	
General Chemistry Parameters												
	% Solids	98.2		%		1	SM2540 G Mod.	30-Mar-10	30-Mar-10	AB	1006684	

Sample Identification	Client Project #	Matrix	Collection Date/Time	Received
IBB-IE-BM10	[none]	Concrete	28-Mar-10 10:55	29-Mar-10
SB09819-02				

CAS No.	Analyte(s)	Result	Flag	Units	*RDL	Dilution	Method Ref.	Prepared	Analyzed	Analyst	Batch	Cert.
Semivolatile Organic Compounds by GC												
Polychlorinated Biphenyls by SW846 8082 Prepared by method SW846 3540C												
12674-11-2	Aroclor-1016	BRL		µg/kg dry	59.8	1	SW846 8082	29-Mar-10	31-Mar-10	TG	1006643	X
11104-28-2	Aroclor-1221	BRL		µg/kg dry	59.8	1	"	"	"	"	"	X
11141-16-5	Aroclor-1232	BRL		µg/kg dry	59.8	1	"	"	"	"	"	X
53469-21-9	Aroclor-1242	BRL		µg/kg dry	59.8	1	"	"	"	"	"	X
12672-29-6	Aroclor-1248	182		µg/kg dry	59.8	1	"	"	"	"	"	X
11097-69-1	Aroclor-1254	BRL		µg/kg dry	59.8	1	"	"	"	"	"	X
11096-82-5	Aroclor-1260	BRL		µg/kg dry	59.8	1	"	"	"	"	"	X
37324-23-5	Aroclor-1262	BRL		µg/kg dry	59.8	1	"	"	"	"	"	X
11100-14-4	Aroclor-1268	BRL		µg/kg dry	59.8	1	"	"	"	"	"	X
Surrogate recoveries:												
10386-84-2	*4,4-DB-Octafluorobiphenyl (Sr)*	*95*			*30-150 %*		"	"	"	"	"	
10386-84-2	*4,4-DB-Octafluorobiphenyl (Sr) [2C]*	*130*			*30-150 %*		"	"	"	"	"	
2051-24-3	*Decachlorobiphenyl (Sr)*	*110*			*30-150 %*		"	"	"	"	"	
2051-24-3	*Decachlorobiphenyl (Sr) [2C]*	*105*			*30-150 %*		"	"	"	"	"	
General Chemistry Parameters												
	% Solids	99.9		%		1	SM2540 G Mod.	30-Mar-10	30-Mar-10	AB	1006684	

DPW Project Number: BI-RT-843
Appendix #3
Addendum #6

Sample Identification	Client Project #	Matrix	Collection Date/Time	Received
IBB-IE-BM11	[none]	Brick	28-Mar-10 11:15	29-Mar-10
SB09819-03				

CAS No.	*Analyte(s)*	*Result*	*Flag*	*Units*	**RDL*	*Dilution*	*Method Ref.*	*Prepared*	*Analyzed*	*Analyst*	*Batch*	*Cert.*
Semivolatile Organic Compounds by GC												
Polychlorinated Biphenyls by SW846 8082 Prepared by method SW846 3540C												
12674-11-2	Aroclor-1016	BRL		µg/kg	58.9	1	SW846 8082	29-Mar-10	30-Mar-10	IMR	1006648	X
11104-28-2	Aroclor-1221	BRL		µg/kg	58.9	1	"	"	"	"	"	X
11141-16-5	Aroclor-1232	BRL		µg/kg	58.9	1	"	"	"	"	"	X
53469-21-9	Aroclor-1242	BRL		µg/kg	58.9	1	"	"	"	"	"	X
12672-29-6	Aroclor-1248	BRL		µg/kg	58.9	1	"	"	"	"	"	X
11097-69-1	Aroclor-1254	BRL		µg/kg	58.9	1	"	"	"	"	"	X
11096-82-5	Aroclor-1260	BRL		µg/kg	58.9	1	"	"	"	"	"	X
37324-23-5	Aroclor-1262	BRL		µg/kg	58.9	1	"	"	"	"	"	X
11100-14-4	Aroclor-1268	BRL		µg/kg	58.9	1	"	"	"	"	"	X
Surrogate recoveries:												
10386-84-2	*4,4-DB-Octafluorobiphenyl (Sr)*	*98*			*30-150 %*		"	"	"	"	"	
10386-84-2	*4,4-DB-Octafluorobiphenyl (Sr) [2C]*	*117*			*30-150 %*		"	"	"	"	"	
2051-24-3	*Decachlorobiphenyl (Sr)*	*80*			*30-150 %*		"	"	"	"	"	
2051-24-3	*Decachlorobiphenyl (Sr) [2C]*	*99*			*30-150 %*		"	"	"	"	"	

Sample Identification	Client Project #	Matrix	Collection Date/Time	Received
IBB-WC-BM7	[none]	Concrete	28-Mar-10 10:10	29-Mar-10
SB09819-04				

CAS No.	*Analyte(s)*	*Result*	*Flag*	*Units*	**RDL*	*Dilution*	*Method Ref.*	*Prepared*	*Analyzed*	*Analyst*	*Batch*	*Cert.*
Semivolatile Organic Compounds by GC												
Polychlorinated Biphenyls by SW846 8082 Prepared by method SW846 3540C												
12674-11-2	Aroclor-1016	BRL		µg/kg dry	56.5	1	SW846 8082	29-Mar-10	31-Mar-10	TG	1006643	X
11104-28-2	Aroclor-1221	BRL		µg/kg dry	56.5	1	"	"	"	"	"	X
11141-16-5	Aroclor-1232	BRL		µg/kg dry	56.5	1	"	"	"	"	"	X
53469-21-9	Aroclor-1242	BRL		µg/kg dry	56.5	1	"	"	"	"	"	X
12672-29-6	Aroclor-1248	887		µg/kg dry	56.5	1	"	"	"	"	"	X
11097-69-1	Aroclor-1254	BRL		µg/kg dry	56.5	1	"	"	"	"	"	X
11096-82-5	Aroclor-1260	BRL		µg/kg dry	56.5	1	"	"	"	"	"	X
37324-23-5	Aroclor-1262	BRL		µg/kg dry	56.5	1	"	"	"	"	"	X
11100-14-4	Aroclor-1268	BRL		µg/kg dry	56.5	1	"	"	"	"	"	X
Surrogate recoveries:												
10386-84-2	*4,4-DB-Octafluorobiphenyl (Sr)*	*90*			*30-150 %*		"	"	"	"	"	
10386-84-2	*4,4-DB-Octafluorobiphenyl (Sr) [2C]*	*90*			*30-150 %*		"	"	"	"	"	
2051-24-3	*Decachlorobiphenyl (Sr)*	*100*			*30-150 %*		"	"	"	"	"	
2051-24-3	*Decachlorobiphenyl (Sr) [2C]*	*110*			*30-150 %*		"	"	"	"	"	
General Chemistry Parameters												
	% Solids	99.6		%		1	SM2540 G Mod.	30-Mar-10	30-Mar-10	AB	1006684	

DPW Project Number: BI-RT-843
Appendix #3
Addendum #6

Sample Identification	Client Project #	Matrix	Collection Date/Time	Received
IBB-IE-BM8 SB09819-05	[none]	Concrete	28-Mar-10 10:20	29-Mar-10

CAS No.	Analyte(s)	Result	Flag	Units	*RDL	Dilution	Method Ref.	Prepared	Analyzed	Analyst	Batch	Cert.
Semivolatile Organic Compounds by GC												
Polychlorinated Biphenyls by SW846 8082 Prepared by method SW846 3540C												
12674-11-2	Aroclor-1016	BRL		µg/kg dry	61.4	1	SW846 8082	29-Mar-10	31-Mar-10	TG	1006643	X
11104-28-2	Aroclor-1221	BRL		µg/kg dry	61.4	1	"	"	"	"	"	X
11141-16-5	Aroclor-1232	BRL		µg/kg dry	61.4	1	"	"	"	"	"	X
53469-21-9	Aroclor-1242	BRL		µg/kg dry	61.4	1	"	"	"	"	"	X
12672-29-6	Aroclor-1248	1,870		µg/kg dry	61.4	1	"	"	"	"	"	X
11097-69-1	Aroclor-1254	BRL		µg/kg dry	61.4	1	"	"	"	"	"	X
11096-82-5	Aroclor-1260	BRL		µg/kg dry	61.4	1	"	"	"	"	"	X
37324-23-5	Aroclor-1262	BRL		µg/kg dry	61.4	1	"	"	"	"	"	X
11100-14-4	Aroclor-1268	BRL		µg/kg dry	61.4	1	"	"	"	"	"	X
Surrogate recoveries:												
10386-84-2	*4,4-DB-Octafluorobiphenyl (Sr)*	*95*			*30-150 %*		"	"	"	"	"	
10386-84-2	*4,4-DB-Octafluorobiphenyl (Sr) [2C]*	*95*			*30-150 %*		"	"	"	"	"	
2051-24-3	*Decachlorobiphenyl (Sr)*	*110*			*30-150 %*		"	"	"	"	"	
2051-24-3	*Decachlorobiphenyl (Sr) [2C]*	*115*			*30-150 %*		"	"	"	"	"	
General Chemistry Parameters												
	% Solids	99.7		%		1	SM2540 G Mod.	30-Mar-10	30-Mar-10	AB	1006684	

Sample Identification	Client Project #	Matrix	Collection Date/Time	Received
IBB-IF-BM12 SB09819-06	[none]	Concrete	28-Mar-10 11:05	29-Mar-10

CAS No.	Analyte(s)	Result	Flag	Units	*RDL	Dilution	Method Ref.	Prepared	Analyzed	Analyst	Batch	Cert.
Semivolatile Organic Compounds by GC												
Polychlorinated Biphenyls by SW846 8082 Prepared by method SW846 3540C												
12674-11-2	Aroclor-1016	BRL		µg/kg dry	58.4	1	SW846 8082	29-Mar-10	31-Mar-10	TG	1006643	X
11104-28-2	Aroclor-1221	BRL		µg/kg dry	58.4	1	"	"	"	"	"	X
11141-16-5	Aroclor-1232	BRL		µg/kg dry	58.4	1	"	"	"	"	"	X
53469-21-9	Aroclor-1242	BRL		µg/kg dry	58.4	1	"	"	"	"	"	X
12672-29-6	Aroclor-1248	126		µg/kg dry	58.4	1	"	"	"	"	"	X
11097-69-1	Aroclor-1254	BRL		µg/kg dry	58.4	1	"	"	"	"	"	X
11096-82-5	Aroclor-1260	BRL		µg/kg dry	58.4	1	"	"	"	"	"	X
37324-23-5	Aroclor-1262	BRL		µg/kg dry	58.4	1	"	"	"	"	"	X
11100-14-4	Aroclor-1268	BRL		µg/kg dry	58.4	1	"	"	"	"	"	X
Surrogate recoveries:												
10386-84-2	*4,4-DB-Octafluorobiphenyl (Sr)*	*85*			*30-150 %*		"	"	"	"	"	
10386-84-2	*4,4-DB-Octafluorobiphenyl (Sr) [2C]*	*90*			*30-150 %*		"	"	"	"	"	
2051-24-3	*Decachlorobiphenyl (Sr)*	*100*			*30-150 %*		"	"	"	"	"	
2051-24-3	*Decachlorobiphenyl (Sr) [2C]*	*95*			*30-150 %*		"	"	"	"	"	
General Chemistry Parameters												
	% Solids	99.4		%		1	SM2540 G Mod.	30-Mar-10	30-Mar-10	AB	1006684	

DPW Project Number: BI-RT-843
Appendix #3
Addendum #6

Sample Identification
AS Comp 1
SB09819-07

Client Project #	Matrix	Collection Date/Time	Received
[none]	Asphalt	29-Mar-10 10:30	29-Mar-10

CAS No.	Analyte(s)	Result	Flag	Units	*RDL	Dilution	Method Ref.	Prepared	Analyzed	Analyst	Batch	Cert.
Semivolatile Organic Compounds by GC												
Polychlorinated Biphenyls by SW846 8082 Prepared by method SW846 3540C												
12674-11-2	Aroclor-1016	BRL		µg/kg	58.2	1	SW846 8082	29-Mar-10	30-Mar-10	IMR	1006648	X
11104-28-2	Aroclor-1221	BRL		µg/kg	58.2	1	"	"	"	"	"	X
11141-16-5	Aroclor-1232	BRL		µg/kg	58.2	1	"	"	"	"	"	X
53469-21-9	Aroclor-1242	BRL		µg/kg	58.2	1	"	"	"	"	"	X
12672-29-6	Aroclor-1248	BRL		µg/kg	58.2	1	"	"	"	"	"	X
11097-69-1	Aroclor-1254	560		µg/kg	58.2	1	"	"	"	"	"	X
11096-82-5	Aroclor-1260	BRL		µg/kg	58.2	1	"	"	"	"	"	X
37324-23-5	Aroclor-1262	BRL		µg/kg	58.2	1	"	"	"	"	"	X
11100-14-4	Aroclor-1268	BRL		µg/kg	58.2	1	"	"	"	"	"	X
Surrogate recoveries:												
10386-84-2	*4,4-DB-Octafluorobiphenyl (Sr)*	*92*			*30-150 %*		"	"	"	"	"	
10386-84-2	*4,4-DB-Octafluorobiphenyl (Sr) [2C]*	*67*			*30-150 %*		"	"	"	"	"	
2051-24-3	*Decachlorobiphenyl (Sr)*	*83*			*30-150 %*		"	"	"	"	"	
2051-24-3	*Decachlorobiphenyl (Sr) [2C]*	*76*			*30-150 %*		"	"	"	"	"	

Sample Identification
AS Comp 2
SB09819-08

Client Project #	Matrix	Collection Date/Time	Received
[none]	Asphalt	29-Mar-10 10:33	29-Mar-10

CAS No.	Analyte(s)	Result	Flag	Units	*RDL	Dilution	Method Ref.	Prepared	Analyzed	Analyst	Batch	Cert.
Semivolatile Organic Compounds by GC												
Polychlorinated Biphenyls by SW846 8082 Prepared by method SW846 3540C												
12674-11-2	Aroclor-1016	BRL		µg/kg	58.1	1	SW846 8082	29-Mar-10	30-Mar-10	IMR	1006648	X
11104-28-2	Aroclor-1221	BRL		µg/kg	58.1	1	"	"	"	"	"	X
11141-16-5	Aroclor-1232	BRL		µg/kg	58.1	1	"	"	"	"	"	X
53469-21-9	Aroclor-1242	BRL		µg/kg	58.1	1	"	"	"	"	"	X
12672-29-6	Aroclor-1248	BRL		µg/kg	58.1	1	"	"	"	"	"	X
11097-69-1	Aroclor-1254	90.4		µg/kg	58.1	1	"	"	"	"	"	X
11096-82-5	Aroclor-1260	BRL		µg/kg	58.1	1	"	"	"	"	"	X
37324-23-5	Aroclor-1262	BRL		µg/kg	58.1	1	"	"	"	"	"	X
11100-14-4	Aroclor-1268	BRL		µg/kg	58.1	1	"	"	"	"	"	X
Surrogate recoveries:												
10386-84-2	*4,4-DB-Octafluorobiphenyl (Sr)*	*103*			*30-150 %*		"	"	"	"	"	
10386-84-2	*4,4-DB-Octafluorobiphenyl (Sr) [2C]*	*109*			*30-150 %*		"	"	"	"	"	
2051-24-3	*Decachlorobiphenyl (Sr)*	*90*			*30-150 %*		"	"	"	"	"	
2051-24-3	*Decachlorobiphenyl (Sr) [2C]*	*80*			*30-150 %*		"	"	"	"	"	

DPW Project Number: BI-RT-843
Appendix #3
Addendum #6

Sample Identification	Client Project #	Matrix	Collection Date/Time	Received
AS Comp 3	[none]	Asphalt	29-Mar-10 10:36	29-Mar-10
SB09819-09				

CAS No.	Analyte(s)	Result	Flag	Units	*RDL	Dilution	Method Ref.	Prepared	Analyzed	Analyst	Batch	Cert.
Semivolatile Organic Compounds by GC												
Polychlorinated Biphenyls by SW846 8082 Prepared by method SW846 3540C												
12674-11-2	Aroclor-1016	BRL		µg/kg	54.7	1	SW846 8082	29-Mar-10	30-Mar-10	IMR	1006648	X
11104-28-2	Aroclor-1221	BRL		µg/kg	54.7	1	"	"	"	"	"	X
11141-16-5	Aroclor-1232	BRL		µg/kg	54.7	1	"	"	"	"	"	X
53469-21-9	Aroclor-1242	BRL		µg/kg	54.7	1	"	"	"	"	"	X
12672-29-6	Aroclor-1248	BRL		µg/kg	54.7	1	"	"	"	"	"	X
11097-69-1	Aroclor-1254	BRL		µg/kg	54.7	1	"	"	"	"	"	X
11096-82-5	Aroclor-1260	BRL		µg/kg	54.7	1	"	"	"	"	"	X
37324-23-5	Aroclor-1262	BRL		µg/kg	54.7	1	"	"	"	"	"	X
11100-14-4	Aroclor-1268	BRL		µg/kg	54.7	1	"	"	"	"	"	X
Surrogate recoveries:												
10386-84-2	*4,4-DB-Octafluorobiphenyl (Sr)*	*86*			*30-150 %*		"	"	"	"	"	
10386-84-2	*4,4-DB-Octafluorobiphenyl (Sr) [2C]*	*88*			*30-150 %*		"	"	"	"	"	
2051-24-3	*Decachlorobiphenyl (Sr)*	*60*			*30-150 %*		"	"	"	"	"	
2051-24-3	*Decachlorobiphenyl (Sr) [2C]*	*68*			*30-150 %*		"	"	"	"	"	

Sample Identification	Client Project #	Matrix	Collection Date/Time	Received
Sand Comp 1	[none]	Sand	28-Mar-10 10:40	29-Mar-10
SB09819-10				

CAS No.	Analyte(s)	Result	Flag	Units	*RDL	Dilution	Method Ref.	Prepared	Analyzed	Analyst	Batch	Cert.
Semivolatile Organic Compounds by GC												
Polychlorinated Biphenyls by SW846 8082 Prepared by method SW846 3540C												
12674-11-2	Aroclor-1016	BRL		µg/kg dry	20.0	1	SW846 8082	29-Mar-10	31-Mar-10	TG	1006643	X
11104-28-2	Aroclor-1221	BRL		µg/kg dry	20.0	1	"	"	"	"	"	X
11141-16-5	Aroclor-1232	BRL		µg/kg dry	20.0	1	"	"	"	"	"	X
53469-21-9	Aroclor-1242	BRL		µg/kg dry	20.0	1	"	"	"	"	"	X
12672-29-6	Aroclor-1248	BRL		µg/kg dry	20.0	1	"	"	"	"	"	X
11097-69-1	Aroclor-1254	56.3		µg/kg dry	20.0	1	"	"	"	"	"	X
11096-82-5	Aroclor-1260	BRL		µg/kg dry	20.0	1	"	"	"	"	"	X
37324-23-5	Aroclor-1262	BRL		µg/kg dry	20.0	1	"	"	"	"	"	X
11100-14-4	Aroclor-1268	BRL		µg/kg dry	20.0	1	"	"	"	"	"	X
Surrogate recoveries:												
10386-84-2	*4,4-DB-Octafluorobiphenyl (Sr)*	*95*			*30-150 %*		"	"	"	"	"	
10386-84-2	*4,4-DB-Octafluorobiphenyl (Sr) [2C]*	*95*			*30-150 %*		"	"	"	"	"	
2051-24-3	*Decachlorobiphenyl (Sr)*	*125*			*30-150 %*		"	"	"	"	"	
2051-24-3	*Decachlorobiphenyl (Sr) [2C]*	*105*			*30-150 %*		"	"	"	"	"	
General Chemistry Parameters												
	% Solids	95.9		%		1	SM2540 G Mod.	30-Mar-10	30-Mar-10	AB	1006684	

DPW Project Number: BI-RT-843
Appendix #3
Addendum #6

Sample Identification	Client Project #	Matrix	Collection Date/Time	Received
SWC-BB-BM1	[none]	Brick	28-Mar-10 15:35	29-Mar-10
SB09819-11				

CAS No.	Analyte(s)	Result	Flag	Units	*RDL	Dilution	Method Ref.	Prepared	Analyzed	Analyst	Batch	Cert.
Semivolatile Organic Compounds by GC												
Polychlorinated Biphenyls by SW846 8082 Prepared by method SW846 3540C												
12674-11-2	Aroclor-1016	BRL		µg/kg	65.8	1	SW846 8082	29-Mar-10	30-Mar-10	IMR	1006648	X
11104-28-2	Aroclor-1221	BRL		µg/kg	65.8	1	"	"	"	"	"	X
11141-16-5	Aroclor-1232	BRL		µg/kg	65.8	1	"	"	"	"	"	X
53469-21-9	Aroclor-1242	BRL		µg/kg	65.8	1	"	"	"	"	"	X
12672-29-6	Aroclor-1248	BRL		µg/kg	65.8	1	"	"	"	"	"	X
11097-69-1	Aroclor-1254	178		µg/kg	65.8	1	"	"	"	"	"	X
11096-82-5	Aroclor-1260	BRL		µg/kg	65.8	1	"	"	"	"	"	X
37324-23-5	Aroclor-1262	BRL		µg/kg	65.8	1	"	"	"	"	"	X
11100-14-4	Aroclor-1268	BRL		µg/kg	65.8	1	"	"	"	"	"	X
Surrogate recoveries:												
10386-84-2	*4,4-DB-Octafluorobiphenyl (Sr)*	*95*			*30-150 %*		"	"	"	"	"	
10386-84-2	*4,4-DB-Octafluorobiphenyl (Sr) [2C]*	*99*			*30-150 %*		"	"	"	"	"	
2051-24-3	*Decachlorobiphenyl (Sr)*	*60*			*30-150 %*		"	"	"	"	"	
2051-24-3	*Decachlorobiphenyl (Sr) [2C]*	*97*			*30-150 %*		"	"	"	"	"	

Sample Identification	Client Project #	Matrix	Collection Date/Time	Received
SWC-BB-BM2	[none]	Brick	28-Mar-10 15:50	29-Mar-10
SB09819-12				

CAS No.	Analyte(s)	Result	Flag	Units	*RDL	Dilution	Method Ref.	Prepared	Analyzed	Analyst	Batch	Cert.
Semivolatile Organic Compounds by GC												
Polychlorinated Biphenyls by SW846 8082 Prepared by method SW846 3540C												
12674-11-2	Aroclor-1016	BRL		µg/kg	59.0	1	SW846 8082	29-Mar-10	30-Mar-10	IMR	1006648	X
11104-28-2	Aroclor-1221	BRL		µg/kg	59.0	1	"	"	"	"	"	X
11141-16-5	Aroclor-1232	BRL		µg/kg	59.0	1	"	"	"	"	"	X
53469-21-9	Aroclor-1242	BRL		µg/kg	59.0	1	"	"	"	"	"	X
12672-29-6	Aroclor-1248	BRL		µg/kg	59.0	1	"	"	"	"	"	X
11097-69-1	Aroclor-1254	80.0		µg/kg	59.0	1	"	"	"	"	"	X
11096-82-5	Aroclor-1260	BRL		µg/kg	59.0	1	"	"	"	"	"	X
37324-23-5	Aroclor-1262	BRL		µg/kg	59.0	1	"	"	"	"	"	X
11100-14-4	Aroclor-1268	BRL		µg/kg	59.0	1	"	"	"	"	"	X
Surrogate recoveries:												
10386-84-2	*4,4-DB-Octafluorobiphenyl (Sr)*	*100*			*30-150 %*		"	"	"	"	"	
10386-84-2	*4,4-DB-Octafluorobiphenyl (Sr) [2C]*	*100*			*30-150 %*		"	"	"	"	"	
2051-24-3	*Decachlorobiphenyl (Sr)*	*66*			*30-150 %*		"	"	"	"	"	
2051-24-3	*Decachlorobiphenyl (Sr) [2C]*	*89*			*30-150 %*		"	"	"	"	"	

DPW Project Number: BI-RT-843
Appendix #3
Addendum #6

Sample Identification	Client Project #	Matrix	Collection Date/Time	Received
SS-BB-BM4	[none]	Brick	28-Mar-10 15:45	29-Mar-10
SB09819-13				

CAS No.	*Analyte(s)*	*Result*	*Flag*	*Units*	**RDL*	*Dilution*	*Method Ref.*	*Prepared*	*Analyzed*	*Analyst*	*Batch*	*Cert.*
Semivolatile Organic Compounds by GC												
Polychlorinated Biphenyls by SW846 8082 Prepared by method SW846 3540C												
12674-11-2	Aroclor-1016	BRL		µg/kg	60.4	1	SW846 8082	29-Mar-10	30-Mar-10	IMR	1006648	X
11104-28-2	Aroclor-1221	BRL		µg/kg	60.4	1	"	"	"	"	"	X
11141-16-5	Aroclor-1232	BRL		µg/kg	60.4	1	"	"	"	"	"	X
53469-21-9	Aroclor-1242	BRL		µg/kg	60.4	1	"	"	"	"	"	X
12672-29-6	Aroclor-1248	BRL		µg/kg	60.4	1	"	"	"	"	"	X
11097-69-1	Aroclor-1254	BRL		µg/kg	60.4	1	"	"	"	"	"	X
11096-82-5	Aroclor-1260	BRL		µg/kg	60.4	1	"	"	"	"	"	X
37324-23-5	Aroclor-1262	BRL		µg/kg	60.4	1	"	"	"	"	"	X
11100-14-4	Aroclor-1268	BRL		µg/kg	60.4	1	"	"	"	"	"	X
Surrogate recoveries:												
10386-84-2	*4,4-DB-Octafluorobiphenyl (Sr)*	*88*			*30-150 %*		"	"	"	"	"	
10386-84-2	*4,4-DB-Octafluorobiphenyl (Sr) [2C]*	*92*			*30-150 %*		"	"	"	"	"	
2051-24-3	*Decachlorobiphenyl (Sr)*	*64*			*30-150 %*		"	"	"	"	"	
2051-24-3	*Decachlorobiphenyl (Sr) [2C]*	*95*			*30-150 %*		"	"	"	"	"	

Sample Identification	Client Project #	Matrix	Collection Date/Time	Received
SS-BB-BM3	[none]	Brick	28-Mar-10 15:45	29-Mar-10
SB09819-14				

CAS No.	*Analyte(s)*	*Result*	*Flag*	*Units*	**RDL*	*Dilution*	*Method Ref.*	*Prepared*	*Analyzed*	*Analyst*	*Batch*	*Cert.*
Semivolatile Organic Compounds by GC												
Polychlorinated Biphenyls by SW846 8082 Prepared by method SW846 3540C												
12674-11-2	Aroclor-1016	BRL		µg/kg	64.3	1	SW846 8082	29-Mar-10	30-Mar-10	IMR	1006648	X
11104-28-2	Aroclor-1221	BRL		µg/kg	64.3	1	"	"	"	"	"	X
11141-16-5	Aroclor-1232	BRL		µg/kg	64.3	1	"	"	"	"	"	X
53469-21-9	Aroclor-1242	BRL		µg/kg	64.3	1	"	"	"	"	"	X
12672-29-6	Aroclor-1248	BRL		µg/kg	64.3	1	"	"	"	"	"	X
11097-69-1	Aroclor-1254	75.2		µg/kg	64.3	1	"	"	"	"	"	X
11096-82-5	Aroclor-1260	BRL		µg/kg	64.3	1	"	"	"	"	"	X
37324-23-5	Aroclor-1262	BRL		µg/kg	64.3	1	"	"	"	"	"	X
11100-14-4	Aroclor-1268	BRL		µg/kg	64.3	1	"	"	"	"	"	X
Surrogate recoveries:												
10386-84-2	*4,4-DB-Octafluorobiphenyl (Sr)*	*98*			*30-150 %*		"	"	"	"	"	
10386-84-2	*4,4-DB-Octafluorobiphenyl (Sr) [2C]*	*101*			*30-150 %*		"	"	"	"	"	
2051-24-3	*Decachlorobiphenyl (Sr)*	*71*			*30-150 %*		"	"	"	"	"	
2051-24-3	*Decachlorobiphenyl (Sr) [2C]*	*99*			*30-150 %*		"	"	"	"	"	

DPW Project Number: BI-RT-843
Appendix #3
Addendum #6

Sample Identification	Client Project #	Matrix	Collection Date/Time	Received
NWC-BB-A11 SB09819-15	[none]	Concrete	28-Mar-10 16:45	29-Mar-10

CAS No.	Analyte(s)	Result	Flag	Units	*RDL	Dilution	Method Ref.	Prepared	Analyzed	Analyst	Batch	Cert.
Semivolatile Organic Compounds by GC												
Polychlorinated Biphenyls by SW846 8082 Prepared by method SW846 3540C												
12674-11-2	Aroclor-1016	BRL		µg/kg dry	65.2	1	SW846 8082	29-Mar-10	31-Mar-10	TG	1006643	X
11104-28-2	Aroclor-1221	BRL		µg/kg dry	65.2	1	"	"	"	"	"	X
11141-16-5	Aroclor-1232	BRL		µg/kg dry	65.2	1	"	"	"	"	"	X
53469-21-9	Aroclor-1242	BRL		µg/kg dry	65.2	1	"	"	"	"	"	X
12672-29-6	Aroclor-1248	BRL		µg/kg dry	65.2	1	"	"	"	"	"	X
11097-69-1	Aroclor-1254	BRL		µg/kg dry	65.2	1	"	"	"	"	"	X
11096-82-5	Aroclor-1260	BRL		µg/kg dry	65.2	1	"	"	"	"	"	X
37324-23-5	Aroclor-1262	BRL		µg/kg dry	65.2	1	"	"	"	"	"	X
11100-14-4	Aroclor-1268	BRL		µg/kg dry	65.2	1	"	"	"	"	"	X
Surrogate recoveries:												
10386-84-2	*4,4-DB-Octafluorobiphenyl (Sr)*	*85*			*30-150 %*		"	"	"	"	"	
10386-84-2	*4,4-DB-Octafluorobiphenyl (Sr) [2C]*	*85*			*30-150 %*		"	"	"	"	"	
2051-24-3	*Decachlorobiphenyl (Sr)*	*105*			*30-150 %*		"	"	"	"	"	
2051-24-3	*Decachlorobiphenyl (Sr) [2C]*	*110*			*30-150 %*		"	"	"	"	"	
General Chemistry Parameters												
	% Solids	95.7		%		1	SM2540 G Mod.	30-Mar-10	30-Mar-10	AB	1006684	

Sample Identification	Client Project #	Matrix	Collection Date/Time	Received
NWC-BB-BM6 SB09819-16	[none]	Brick	28-Mar-10 16:50	29-Mar-10

CAS No.	Analyte(s)	Result	Flag	Units	*RDL	Dilution	Method Ref.	Prepared	Analyzed	Analyst	Batch	Cert.
Semivolatile Organic Compounds by GC												
Polychlorinated Biphenyls by SW846 8082 Prepared by method SW846 3540C												
12674-11-2	Aroclor-1016	BRL		µg/kg	56.6	1	SW846 8082	29-Mar-10	30-Mar-10	IMR	1006648	X
11104-28-2	Aroclor-1221	BRL		µg/kg	56.6	1	"	"	"	"	"	X
11141-16-5	Aroclor-1232	BRL		µg/kg	56.6	1	"	"	"	"	"	X
53469-21-9	Aroclor-1242	BRL		µg/kg	56.6	1	"	"	"	"	"	X
12672-29-6	Aroclor-1248	BRL		µg/kg	56.6	1	"	"	"	"	"	X
11097-69-1	Aroclor-1254	76.1		µg/kg	56.6	1	"	"	"	"	"	X
11096-82-5	Aroclor-1260	BRL		µg/kg	56.6	1	"	"	"	"	"	X
37324-23-5	Aroclor-1262	BRL		µg/kg	56.6	1	"	"	"	"	"	X
11100-14-4	Aroclor-1268	BRL		µg/kg	56.6	1	"	"	"	"	"	X
Surrogate recoveries:												
10386-84-2	*4,4-DB-Octafluorobiphenyl (Sr)*	*96*			*30-150 %*		"	"	"	"	"	
10386-84-2	*4,4-DB-Octafluorobiphenyl (Sr) [2C]*	*98*			*30-150 %*		"	"	"	"	"	
2051-24-3	*Decachlorobiphenyl (Sr)*	*66*			*30-150 %*		"	"	"	"	"	
2051-24-3	*Decachlorobiphenyl (Sr) [2C]*	*93*			*30-150 %*		"	"	"	"	"	

DPW Project Number: BI-RT-843
Appendix #3
Addendum #6

Sample Identification	Client Project #	Matrix	Collection Date/Time	Received
NWC-BB-BM5	[none]	Brick	28-Mar-10 16:40	29-Mar-10
SB09819-17				

CAS No.	*Analyte(s)*	*Result*	*Flag*	*Units*	**RDL*	*Dilution*	*Method Ref.*	*Prepared*	*Analyzed*	*Analyst*	*Batch*	*Cert.*
Semivolatile Organic Compounds by GC												
Polychlorinated Biphenyls by SW846 8082 Prepared by method SW846 3540C												
12674-11-2	Aroclor-1016	BRL		µg/kg	61.2	1	SW846 8082	29-Mar-10	30-Mar-10	IMR	1006648	X
11104-28-2	Aroclor-1221	BRL		µg/kg	61.2	1	"	"	"	"	"	X
11141-16-5	Aroclor-1232	BRL		µg/kg	61.2	1	"	"	"	"	"	X
53469-21-9	Aroclor-1242	BRL		µg/kg	61.2	1	"	"	"	"	"	X
12672-29-6	Aroclor-1248	BRL		µg/kg	61.2	1	"	"	"	"	"	X
11097-69-1	Aroclor-1254	BRL		µg/kg	61.2	1	"	"	"	"	"	X
11096-82-5	Aroclor-1260	BRL		µg/kg	61.2	1	"	"	"	"	"	X
37324-23-5	Aroclor-1262	BRL		µg/kg	61.2	1	"	"	"	"	"	X
11100-14-4	Aroclor-1268	BRL		µg/kg	61.2	1	"	"	"	"	"	X
Surrogate recoveries:												
10386-84-2	*4,4-DB-Octafluorobiphenyl (Sr)*	*103*			*30-150 %*		"	"	"	"	"	
10386-84-2	*4,4-DB-Octafluorobiphenyl (Sr) [2C]*	*104*			*30-150 %*		"	"	"	"	"	
2051-24-3	*Decachlorobiphenyl (Sr)*	*72*			*30-150 %*		"	"	"	"	"	
2051-24-3	*Decachlorobiphenyl (Sr) [2C]*	*105*			*30-150 %*		"	"	"	"	"	

Sample Identification	Client Project #	Matrix	Collection Date/Time	Received
SS-BC-BM9	[none]	Concrete	28-Mar-10 17:55	29-Mar-10
SB09819-18				

CAS No.	*Analyte(s)*	*Result*	*Flag*	*Units*	**RDL*	*Dilution*	*Method Ref.*	*Prepared*	*Analyzed*	*Analyst*	*Batch*	*Cert.*
Semivolatile Organic Compounds by GC												
Polychlorinated Biphenyls by SW846 8082 Prepared by method SW846 3540C												
12674-11-2	Aroclor-1016	BRL		µg/kg dry	62.0	1	SW846 8082	29-Mar-10	31-Mar-10	TG	1006643	X
11104-28-2	Aroclor-1221	BRL		µg/kg dry	62.0	1	"	"	"	"	"	X
11141-16-5	Aroclor-1232	BRL		µg/kg dry	62.0	1	"	"	"	"	"	X
53469-21-9	Aroclor-1242	BRL		µg/kg dry	62.0	1	"	"	"	"	"	X
12672-29-6	Aroclor-1248	BRL		µg/kg dry	62.0	1	"	"	"	"	"	X
11097-69-1	Aroclor-1254	BRL		µg/kg dry	62.0	1	"	"	"	"	"	X
11096-82-5	Aroclor-1260	BRL		µg/kg dry	62.0	1	"	"	"	"	"	X
37324-23-5	Aroclor-1262	BRL		µg/kg dry	62.0	1	"	"	"	"	"	X
11100-14-4	Aroclor-1268	BRL		µg/kg dry	62.0	1	"	"	"	"	"	X
Surrogate recoveries:												
10386-84-2	*4,4-DB-Octafluorobiphenyl (Sr)*	*85*			*30-150 %*		"	"	"	"	"	
10386-84-2	*4,4-DB-Octafluorobiphenyl (Sr) [2C]*	*90*			*30-150 %*		"	"	"	"	"	
2051-24-3	*Decachlorobiphenyl (Sr)*	*105*			*30-150 %*		"	"	"	"	"	
2051-24-3	*Decachlorobiphenyl (Sr) [2C]*	*85*			*30-150 %*		"	"	"	"	"	
General Chemistry Parameters												
	% Solids	99.0		%		1	SM2540 G Mod.	30-Mar-10	30-Mar-10	AB	1006684	

DPW Project Number: BI-RT-843
Appendix #3
Addendum #6

Sample Identification	Client Project #	Matrix	Collection Date/Time	Received
SS-BC-BM8	[none]	Concrete	28-Mar-10 17:45	29-Mar-10
SB09819-19				

CAS No.	*Analyte(s)*	*Result*	*Flag*	*Units*	**RDL*	*Dilution*	*Method Ref.*	*Prepared*	*Analyzed*	*Analyst*	*Batch*	*Cert.*
Semivolatile Organic Compounds by GC												
Polychlorinated Biphenyls by SW846 8082 Prepared by method SW846 3540C												
12674-11-2	Aroclor-1016	BRL		µg/kg dry	66.2	1	SW846 8082	29-Mar-10	31-Mar-10	TG	1006643	X
11104-28-2	Aroclor-1221	BRL		µg/kg dry	66.2	1	"	"	"	"	"	X
11141-16-5	Aroclor-1232	BRL		µg/kg dry	66.2	1	"	"	"	"	"	X
53469-21-9	Aroclor-1242	BRL		µg/kg dry	66.2	1	"	"	"	"	"	X
12672-29-6	Aroclor-1248	BRL		µg/kg dry	66.2	1	"	"	"	"	"	X
11097-69-1	Aroclor-1254	BRL		µg/kg dry	66.2	1	"	"	"	"	"	X
11096-82-5	Aroclor-1260	BRL		µg/kg dry	66.2	1	"	"	"	"	"	X
37324-23-5	Aroclor-1262	BRL		µg/kg dry	66.2	1	"	"	"	"	"	X
11100-14-4	Aroclor-1268	BRL		µg/kg dry	66.2	1	"	"	"	"	"	X
Surrogate recoveries:												
10386-84-2	*4,4-DB-Octafluorobiphenyl (Sr)*	*95*			*30-150 %*		"	"	"	"	"	
10386-84-2	*4,4-DB-Octafluorobiphenyl (Sr) [2C]*	*100*			*30-150 %*		"	"	"	"	"	
2051-24-3	*Decachlorobiphenyl (Sr)*	*105*			*30-150 %*		"	"	"	"	"	
2051-24-3	*Decachlorobiphenyl (Sr) [2C]*	*110*			*30-150 %*		"	"	"	"	"	
General Chemistry Parameters												
	% Solids	97.7		%		1	SM2540 G Mod.	30-Mar-10	30-Mar-10	AB	1006684	

Sample Identification	Client Project #	Matrix	Collection Date/Time	Received
SS-BC-BM7	[none]	Brick	28-Mar-10 17:53	29-Mar-10
SB09819-20				

CAS No.	*Analyte(s)*	*Result*	*Flag*	*Units*	**RDL*	*Dilution*	*Method Ref.*	*Prepared*	*Analyzed*	*Analyst*	*Batch*	*Cert.*
Semivolatile Organic Compounds by GC												
Polychlorinated Biphenyls by SW846 8082 Prepared by method SW846 3540C												
12674-11-2	Aroclor-1016	BRL		µg/kg	56.7	1	SW846 8082	29-Mar-10	30-Mar-10	IMR	1006648	X
11104-28-2	Aroclor-1221	BRL		µg/kg	56.7	1	"	"	"	"	"	X
11141-16-5	Aroclor-1232	BRL		µg/kg	56.7	1	"	"	"	"	"	X
53469-21-9	Aroclor-1242	BRL		µg/kg	56.7	1	"	"	"	"	"	X
12672-29-6	Aroclor-1248	BRL		µg/kg	56.7	1	"	"	"	"	"	X
11097-69-1	Aroclor-1254	BRL		µg/kg	56.7	1	"	"	"	"	"	X
11096-82-5	Aroclor-1260	BRL		µg/kg	56.7	1	"	"	"	"	"	X
37324-23-5	Aroclor-1262	BRL		µg/kg	56.7	1	"	"	"	"	"	X
11100-14-4	Aroclor-1268	BRL		µg/kg	56.7	1	"	"	"	"	"	X
Surrogate recoveries:												
10386-84-2	*4,4-DB-Octafluorobiphenyl (Sr)*	*100*			*30-150 %*		"	"	"	"	"	
10386-84-2	*4,4-DB-Octafluorobiphenyl (Sr) [2C]*	*104*			*30-150 %*		"	"	"	"	"	
2051-24-3	*Decachlorobiphenyl (Sr)*	*68*			*30-150 %*		"	"	"	"	"	
2051-24-3	*Decachlorobiphenyl (Sr) [2C]*	*102*			*30-150 %*		"	"	"	"	"	

DPW Project Number: BI-RT-843
Appendix #3
Addendum #6

Sample Identification	Client Project #	Matrix	Collection Date/Time	Received
SS-BC-BM21	[none]	Concrete	28-Mar-10 13:32	29-Mar-10
SB09819-21				

CAS No.	Analyte(s)	Result	Flag	Units	*RDL	Dilution	Method Ref.	Prepared	Analyzed	Analyst	Batch	Cert.
Semivolatile Organic Compounds by GC												
Polychlorinated Biphenyls by SW846 8082 Prepared by method SW846 3540C												
12674-11-2	Aroclor-1016	BRL		µg/kg dry	61.7	1	SW846 8082	29-Mar-10	31-Mar-10	TG	1006643	X
11104-28-2	Aroclor-1221	BRL		µg/kg dry	61.7	1	"	"	"	"	"	X
11141-16-5	Aroclor-1232	BRL		µg/kg dry	61.7	1	"	"	"	"	"	X
53469-21-9	Aroclor-1242	BRL		µg/kg dry	61.7	1	"	"	"	"	"	X
12672-29-6	Aroclor-1248	BRL		µg/kg dry	61.7	1	"	"	"	"	"	X
11097-69-1	Aroclor-1254	BRL		µg/kg dry	61.7	1	"	"	"	"	"	X
11096-82-5	Aroclor-1260	BRL		µg/kg dry	61.7	1	"	"	"	"	"	X
37324-23-5	Aroclor-1262	BRL		µg/kg dry	61.7	1	"	"	"	"	"	X
11100-14-4	Aroclor-1268	BRL		µg/kg dry	61.7	1	"	"	"	"	"	X
Surrogate recoveries:												
10386-84-2	*4,4-DB-Octafluorobiphenyl (Sr)*	*85*			*30-150 %*		"	"	"	"	"	
10386-84-2	*4,4-DB-Octafluorobiphenyl (Sr) [2C]*	*85*			*30-150 %*		"	"	"	"	"	
2051-24-3	*Decachlorobiphenyl (Sr)*	*95*			*30-150 %*		"	"	"	"	"	
2051-24-3	*Decachlorobiphenyl (Sr) [2C]*	*90*			*30-150 %*		"	"	"	"	"	
General Chemistry Parameters												
	% Solids	100		%		1	SM2540 G Mod.	30-Mar-10	30-Mar-10	AB	1006684	

Sample Identification	Client Project #	Matrix	Collection Date/Time	Received
SS-BC-BM22	[none]	Concrete	28-Mar-10 13:35	29-Mar-10
SB09819-22				

CAS No.	Analyte(s)	Result	Flag	Units	*RDL	Dilution	Method Ref.	Prepared	Analyzed	Analyst	Batch	Cert.
Semivolatile Organic Compounds by GC												
Polychlorinated Biphenyls by SW846 8082 Prepared by method SW846 3540C												
12674-11-2	Aroclor-1016	BRL		µg/kg dry	56.5	1	SW846 8082	29-Mar-10	31-Mar-10	TG	1006643	X
11104-28-2	Aroclor-1221	BRL		µg/kg dry	56.5	1	"	"	"	"	"	X
11141-16-5	Aroclor-1232	BRL		µg/kg dry	56.5	1	"	"	"	"	"	X
53469-21-9	Aroclor-1242	BRL		µg/kg dry	56.5	1	"	"	"	"	"	X
12672-29-6	Aroclor-1248	BRL		µg/kg dry	56.5	1	"	"	"	"	"	X
11097-69-1	Aroclor-1254	86.7		µg/kg dry	56.5	1	"	"	"	"	"	X
11096-82-5	Aroclor-1260	BRL		µg/kg dry	56.5	1	"	"	"	"	"	X
37324-23-5	Aroclor-1262	BRL		µg/kg dry	56.5	1	"	"	"	"	"	X
11100-14-4	Aroclor-1268	BRL		µg/kg dry	56.5	1	"	"	"	"	"	X
Surrogate recoveries:												
10386-84-2	*4,4-DB-Octafluorobiphenyl (Sr)*	*80*			*30-150 %*		"	"	"	"	"	
10386-84-2	*4,4-DB-Octafluorobiphenyl (Sr) [2C]*	*85*			*30-150 %*		"	"	"	"	"	
2051-24-3	*Decachlorobiphenyl (Sr)*	*95*			*30-150 %*		"	"	"	"	"	
2051-24-3	*Decachlorobiphenyl (Sr) [2C]*	*95*			*30-150 %*		"	"	"	"	"	
General Chemistry Parameters												
	% Solids	99.6		%		1	SM2540 G Mod.	30-Mar-10	30-Mar-10	AB	1006684	

DPW Project Number: BI-RT-843
Appendix #3
Addendum #6

Sample Identification	Client Project #	Matrix	Collection Date/Time	Received
SS-BC-BM23 SB09819-23	[none]	Concrete	28-Mar-10 13:38	29-Mar-10

CAS No.	*Analyte(s)*	*Result*	*Flag*	*Units*	**RDL*	*Dilution*	*Method Ref.*	*Prepared*	*Analyzed*	*Analyst*	*Batch*	*Cert.*
Semivolatile Organic Compounds by GC												
Polychlorinated Biphenyls by SW846 8082 Prepared by method SW846 3540C												
12674-11-2	Aroclor-1016	BRL		µg/kg dry	57.2	1	SW846 8082	29-Mar-10	31-Mar-10	TG	1006643	X
11104-28-2	Aroclor-1221	BRL		µg/kg dry	57.2	1	"	"	"	"	"	X
11141-16-5	Aroclor-1232	BRL		µg/kg dry	57.2	1	"	"	"	"	"	X
53469-21-9	Aroclor-1242	BRL		µg/kg dry	57.2	1	"	"	"	"	"	X
12672-29-6	Aroclor-1248	BRL		µg/kg dry	57.2	1	"	"	"	"	"	X
11097-69-1	Aroclor-1254	BRL		µg/kg dry	57.2	1	"	"	"	"	"	X
11096-82-5	Aroclor-1260	BRL		µg/kg dry	57.2	1	"	"	"	"	"	X
37324-23-5	Aroclor-1262	BRL		µg/kg dry	57.2	1	"	"	"	"	"	X
11100-14-4	Aroclor-1268	BRL		µg/kg dry	57.2	1	"	"	"	"	"	X
Surrogate recoveries:												
10386-84-2	*4,4-DB-Octafluorobiphenyl (Sr)*	*90*			*30-150 %*		"	"	"	"	"	
10386-84-2	*4,4-DB-Octafluorobiphenyl (Sr) [2C]*	*90*			*30-150 %*		"	"	"	"	"	
2051-24-3	*Decachlorobiphenyl (Sr)*	*105*			*30-150 %*		"	"	"	"	"	
2051-24-3	*Decachlorobiphenyl (Sr) [2C]*	*105*			*30-150 %*		"	"	"	"	"	
General Chemistry Parameters												
	% Solids	100		%		1	SM2540 G Mod.	30-Mar-10	30-Mar-10	AB	1006684	

Sample Identification	Client Project #	Matrix	Collection Date/Time	Received
SS-BC-S7 SB09819-24	[none]	Soil	28-Mar-10 17:00	29-Mar-10

CAS No.	*Analyte(s)*	*Result*	*Flag*	*Units*	**RDL*	*Dilution*	*Method Ref.*	*Prepared*	*Analyzed*	*Analyst*	*Batch*	*Cert.*
Semivolatile Organic Compounds by GC												
Polychlorinated Biphenyls by SW846 8082 Prepared by method SW846 3540C												
12674-11-2	Aroclor-1016	BRL		µg/kg dry	24.7	1	SW846 8082	29-Mar-10	31-Mar-10	TG	1006643	X
11104-28-2	Aroclor-1221	BRL		µg/kg dry	24.7	1	"	"	"	"	"	X
11141-16-5	Aroclor-1232	BRL		µg/kg dry	24.7	1	"	"	"	"	"	X
53469-21-9	Aroclor-1242	BRL		µg/kg dry	24.7	1	"	"	"	"	"	X
12672-29-6	Aroclor-1248	BRL		µg/kg dry	24.7	1	"	"	"	"	"	X
11097-69-1	Aroclor-1254	87.9		µg/kg dry	24.7	1	"	"	"	"	"	X
11096-82-5	Aroclor-1260	BRL		µg/kg dry	24.7	1	"	"	"	"	"	X
37324-23-5	Aroclor-1262	BRL		µg/kg dry	24.7	1	"	"	"	"	"	X
11100-14-4	Aroclor-1268	BRL		µg/kg dry	24.7	1	"	"	"	"	"	X
Surrogate recoveries:												
10386-84-2	*4,4-DB-Octafluorobiphenyl (Sr)*	*90*			*30-150 %*		"	"	"	"	"	
10386-84-2	*4,4-DB-Octafluorobiphenyl (Sr) [2C]*	*100*			*30-150 %*		"	"	"	"	"	
2051-24-3	*Decachlorobiphenyl (Sr)*	*130*			*30-150 %*		"	"	"	"	"	
2051-24-3	*Decachlorobiphenyl (Sr) [2C]*	*95*			*30-150 %*		"	"	"	"	"	
General Chemistry Parameters												
	% Solids	80.9		%		1	SM2540 G Mod.	30-Mar-10	30-Mar-10	AB	1006684	

DPW Project Number: BI-RT-843
Appendix #3
Addendum #6

Sample Identification	Client Project #	Matrix	Collection Date/Time	Received
SS-BC-S8	[none]	Soil	28-Mar-10 17:05	29-Mar-10
SB09819-25				

CAS No.	Analyte(s)	Result	Flag	Units	*RDL	Dilution	Method Ref.	Prepared	Analyzed	Analyst	Batch	Cert.
Semivolatile Organic Compounds by GC												
Polychlorinated Biphenyls by SW846 8082 Prepared by method SW846 3540C												
12674-11-2	Aroclor-1016	BRL		µg/kg dry	24.2	1	SW846 8082	29-Mar-10	31-Mar-10	TG	1006643	X
11104-28-2	Aroclor-1221	BRL		µg/kg dry	24.2	1	"	"	"	"	"	X
11141-16-5	Aroclor-1232	BRL		µg/kg dry	24.2	1	"	"	"	"	"	X
53469-21-9	Aroclor-1242	BRL		µg/kg dry	24.2	1	"	"	"	"	"	X
12672-29-6	Aroclor-1248	BRL		µg/kg dry	24.2	1	"	"	"	"	"	X
11097-69-1	Aroclor-1254	101		µg/kg dry	24.2	1	"	"	"	"	"	X
11096-82-5	Aroclor-1260	BRL		µg/kg dry	24.2	1	"	"	"	"	"	X
37324-23-5	Aroclor-1262	BRL		µg/kg dry	24.2	1	"	"	"	"	"	X
11100-14-4	Aroclor-1268	BRL		µg/kg dry	24.2	1	"	"	"	"	"	X
Surrogate recoveries:												
10386-84-2	*4,4-DB-Octafluorobiphenyl (Sr)*	*95*			*30-150 %*		"	"	"	"	"	
10386-84-2	*4,4-DB-Octafluorobiphenyl (Sr) [2C]*	*100*			*30-150 %*		"	"	"	"	"	
2051-24-3	*Decachlorobiphenyl (Sr)*	*135*			*30-150 %*		"	"	"	"	"	
2051-24-3	*Decachlorobiphenyl (Sr) [2C]*	*100*			*30-150 %*		"	"	"	"	"	
General Chemistry Parameters												
	% Solids	82.3		%		1	SM2540 G Mod.	30-Mar-10	30-Mar-10	AB	1006684	

Sample Identification	Client Project #	Matrix	Collection Date/Time	Received
SS-BC-S9	[none]	Soil	28-Mar-10 17:10	29-Mar-10
SB09819-26				

CAS No.	Analyte(s)	Result	Flag	Units	*RDL	Dilution	Method Ref.	Prepared	Analyzed	Analyst	Batch	Cert.
Semivolatile Organic Compounds by GC												
Polychlorinated Biphenyls by SW846 8082 Prepared by method SW846 3540C												
12674-11-2	Aroclor-1016	BRL		µg/kg dry	23.9	1	SW846 8082	29-Mar-10	30-Mar-10	SM	1006649	X
11104-28-2	Aroclor-1221	BRL		µg/kg dry	23.9	1	"	"	"	"	"	X
11141-16-5	Aroclor-1232	BRL		µg/kg dry	23.9	1	"	"	"	"	"	X
53469-21-9	Aroclor-1242	BRL		µg/kg dry	23.9	1	"	"	"	"	"	X
12672-29-6	Aroclor-1248	BRL		µg/kg dry	23.9	1	"	"	"	"	"	X
11097-69-1	Aroclor-1254	63.9		µg/kg dry	23.9	1	"	"	"	"	"	X
11096-82-5	Aroclor-1260	69.8		µg/kg dry	23.9	1	"	"	"	"	"	X
37324-23-5	Aroclor-1262	BRL		µg/kg dry	23.9	1	"	"	"	"	"	X
11100-14-4	Aroclor-1268	BRL		µg/kg dry	23.9	1	"	"	"	"	"	X
Surrogate recoveries:												
10386-84-2	*4,4-DB-Octafluorobiphenyl (Sr)*	*117*			*30-150 %*		"	"	"	"	"	
10386-84-2	*4,4-DB-Octafluorobiphenyl (Sr) [2C]*	*109*			*30-150 %*		"	"	"	"	"	
2051-24-3	*Decachlorobiphenyl (Sr)*	*119*			*30-150 %*		"	"	"	"	"	
2051-24-3	*Decachlorobiphenyl (Sr) [2C]*	*98*			*30-150 %*		"	"	"	"	"	
General Chemistry Parameters												
	% Solids	80.1		%		1	SM2540 G Mod.	30-Mar-10	30-Mar-10	AB	1006685	

DPW Project Number: BI-RT-843
Appendix #3
Addendum #6

Sample Identification	Client Project #	Matrix	Collection Date/Time	Received
SEC-BA-A2	[none]	Asphalt	28-Mar-10 08:15	29-Mar-10
SB09819-27				

CAS No.	*Analyte(s)*	*Result*	*Flag*	*Units*	**RDL*	*Dilution*	*Method Ref.*	*Prepared*	*Analyzed*	*Analyst*	*Batch*	*Cert.*
Semivolatile Organic Compounds by GC												
Polychlorinated Biphenyls by SW846 8082 Prepared by method SW846 3540C												
12674-11-2	Aroclor-1016	BRL		µg/kg	56.6	1	SW846 8082	29-Mar-10	30-Mar-10	IMR	1006648	X
11104-28-2	Aroclor-1221	BRL		µg/kg	56.6	1	"	"	"	"	"	X
11141-16-5	Aroclor-1232	BRL		µg/kg	56.6	1	"	"	"	"	"	X
53469-21-9	Aroclor-1242	BRL		µg/kg	56.6	1	"	"	"	"	"	X
12672-29-6	Aroclor-1248	BRL		µg/kg	56.6	1	"	"	"	"	"	X
11097-69-1	Aroclor-1254	BRL		µg/kg	56.6	1	"	"	"	"	"	X
11096-82-5	Aroclor-1260	BRL		µg/kg	56.6	1	"	"	"	"	"	X
37324-23-5	Aroclor-1262	BRL		µg/kg	56.6	1	"	"	"	"	"	X
11100-14-4	Aroclor-1268	BRL		µg/kg	56.6	1	"	"	"	"	"	X
Surrogate recoveries:												
10386-84-2	*4,4-DB-Octafluorobiphenyl (Sr)*	*74*			*30-150 %*		"	"	"	"	"	
10386-84-2	*4,4-DB-Octafluorobiphenyl (Sr) [2C]*	*73*			*30-150 %*		"	"	"	"	"	
2051-24-3	*Decachlorobiphenyl (Sr)*	*48*			*30-150 %*		"	"	"	"	"	
2051-24-3	*Decachlorobiphenyl (Sr) [2C]*	*46*			*30-150 %*		"	"	"	"	"	

Sample Identification	Client Project #	Matrix	Collection Date/Time	Received
SWC-BB-A Comp	[none]	Asphalt	29-Mar-10 13:10	29-Mar-10
SB09819-28				

CAS No.	*Analyte(s)*	*Result*	*Flag*	*Units*	**RDL*	*Dilution*	*Method Ref.*	*Prepared*	*Analyzed*	*Analyst*	*Batch*	*Cert.*
Semivolatile Organic Compounds by GC												
Polychlorinated Biphenyls by SW846 8082 Prepared by method SW846 3540C												
12674-11-2	Aroclor-1016	BRL		µg/kg	63.4	1	SW846 8082	29-Mar-10	30-Mar-10	IMR	1006648	X
11104-28-2	Aroclor-1221	BRL		µg/kg	63.4	1	"	"	"	"	"	X
11141-16-5	Aroclor-1232	BRL		µg/kg	63.4	1	"	"	"	"	"	X
53469-21-9	Aroclor-1242	BRL		µg/kg	63.4	1	"	"	"	"	"	X
12672-29-6	Aroclor-1248	BRL		µg/kg	63.4	1	"	"	"	"	"	X
11097-69-1	Aroclor-1254	BRL		µg/kg	63.4	1	"	"	"	"	"	X
11096-82-5	Aroclor-1260	BRL		µg/kg	63.4	1	"	"	"	"	"	X
37324-23-5	Aroclor-1262	BRL		µg/kg	63.4	1	"	"	"	"	"	X
11100-14-4	Aroclor-1268	BRL		µg/kg	63.4	1	"	"	"	"	"	X
Surrogate recoveries:												
10386-84-2	*4,4-DB-Octafluorobiphenyl (Sr)*	*94*			*30-150 %*		"	"	"	"	"	
10386-84-2	*4,4-DB-Octafluorobiphenyl (Sr) [2C]*	*100*			*30-150 %*		"	"	"	"	"	
2051-24-3	*Decachlorobiphenyl (Sr)*	*58*			*30-150 %*		"	"	"	"	"	
2051-24-3	*Decachlorobiphenyl (Sr) [2C]*	*60*			*30-150 %*		"	"	"	"	"	

Sample Identification	Client Project #	Matrix	Collection Date/Time	Received
SS-BB-A Comp	[none]	Concrete	29-Mar-10 13:15	29-Mar-10
SB09819-29				

CAS No.	Analyte(s)	Result	Flag	Units	*RDL	Dilution	Method Ref.	Prepared	Analyzed	Analyst	Batch	Cert.
Semivolatile Organic Compounds by GC												
Polychlorinated Biphenyls by SW846 8082 Prepared by method SW846 3540C												
12674-11-2	Aroclor-1016	BRL		µg/kg dry	60.5	1	SW846 8082	29-Mar-10	30-Mar-10	SM	1006649	X
11104-28-2	Aroclor-1221	BRL		µg/kg dry	60.5	1	"	"	"	"	"	X
11141-16-5	Aroclor-1232	BRL		µg/kg dry	60.5	1	"	"	"	"	"	X
53469-21-9	Aroclor-1242	BRL		µg/kg dry	60.5	1	"	"	"	"	"	X
12672-29-6	Aroclor-1248	BRL		µg/kg dry	60.5	1	"	"	"	"	"	X
11097-69-1	Aroclor-1254	BRL		µg/kg dry	60.5	1	"	"	"	"	"	X
11096-82-5	Aroclor-1260	BRL		µg/kg dry	60.5	1	"	"	"	"	"	X
37324-23-5	Aroclor-1262	BRL		µg/kg dry	60.5	1	"	"	"	"	"	X
11100-14-4	Aroclor-1268	BRL		µg/kg dry	60.5	1	"	"	"	"	"	X
Surrogate recoveries:												
10386-84-2	*4,4-DB-Octafluorobiphenyl (Sr)*	*91*			*30-150 %*		"	"	"	"	"	
10386-84-2	*4,4-DB-Octafluorobiphenyl (Sr) [2C]*	*111*			*30-150 %*		"	"	"	"	"	
2051-24-3	*Decachlorobiphenyl (Sr)*	*125*			*30-150 %*		"	"	"	"	"	
2051-24-3	*Decachlorobiphenyl (Sr) [2C]*	*121*			*30-150 %*		"	"	"	"	"	
General Chemistry Parameters												
	% Solids	97.2		%		1	SM2540 G Mod.	30-Mar-10	30-Mar-10	AB	1006685	

Sample Identification	Client Project #	Matrix	Collection Date/Time	Received
NWSBA Comp 1	[none]	Soil	29-Mar-10 12:00	29-Mar-10
SB09819-30				

CAS No.	Analyte(s)	Result	Flag	Units	*RDL	Dilution	Method Ref.	Prepared	Analyzed	Analyst	Batch	Cert.
Semivolatile Organic Compounds by GC												
Polychlorinated Biphenyls by SW846 8082 Prepared by method SW846 3540C												
12674-11-2	Aroclor-1016	BRL		µg/kg dry	23.9	1	SW846 8082	29-Mar-10	30-Mar-10	SM	1006649	X
11104-28-2	Aroclor-1221	BRL		µg/kg dry	23.9	1	"	"	"	"	"	X
11141-16-5	Aroclor-1232	BRL		µg/kg dry	23.9	1	"	"	"	"	"	X
53469-21-9	Aroclor-1242	BRL		µg/kg dry	23.9	1	"	"	"	"	"	X
12672-29-6	Aroclor-1248	BRL		µg/kg dry	23.9	1	"	"	"	"	"	X
11097-69-1	Aroclor-1254	4,580		µg/kg dry	23.9	1	"	"	"	"	"	X
11096-82-5	Aroclor-1260	1,750		µg/kg dry	23.9	1	"	"	"	"	"	X
37324-23-5	Aroclor-1262	BRL		µg/kg dry	23.9	1	"	"	"	"	"	X
11100-14-4	Aroclor-1268	BRL		µg/kg dry	23.9	1	"	"	"	"	"	X
Surrogate recoveries:												
10386-84-2	*4,4-DB-Octafluorobiphenyl (Sr)*	*100*			*30-150 %*		"	"	"	"	"	
10386-84-2	*4,4-DB-Octafluorobiphenyl (Sr) [2C]*	*93*			*30-150 %*		"	"	"	"	"	
2051-24-3	*Decachlorobiphenyl (Sr)*	*106*			*30-150 %*		"	"	"	"	"	
2051-24-3	*Decachlorobiphenyl (Sr) [2C]*	*119*			*30-150 %*		"	"	"	"	"	
General Chemistry Parameters												
	% Solids	80.7		%		1	SM2540 G Mod.	30-Mar-10	30-Mar-10	AB	1006685	

DPW Project Number: BI-RT-843
Appendix #3
Addendum #6

Sample Identification	Client Project #	Matrix	Collection Date/Time	Received
NWSBA Comp 2	[none]	Soil	29-Mar-10 12:05	29-Mar-10
SB09819-31				

CAS No.	Analyte(s)	Result	Flag	Units	*RDL	Dilution	Method Ref.	Prepared	Analyzed	Analyst	Batch	Cert.
Semivolatile Organic Compounds by GC												
Polychlorinated Biphenyls by SW846 8082 Prepared by method SW846 3540C												
12674-11-2	Aroclor-1016	BRL		µg/kg dry	24.2	1	SW846 8082	29-Mar-10	30-Mar-10	SM	1006649	X
11104-28-2	Aroclor-1221	BRL		µg/kg dry	24.2	1	"	"	"	"	"	X
11141-16-5	Aroclor-1232	BRL		µg/kg dry	24.2	1	"	"	"	"	"	X
53469-21-9	Aroclor-1242	BRL		µg/kg dry	24.2	1	"	"	"	"	"	X
12672-29-6	Aroclor-1248	BRL		µg/kg dry	24.2	1	"	"	"	"	"	X
11097-69-1	Aroclor-1254	1,600		µg/kg dry	24.2	1	"	"	"	"	"	X
11096-82-5	Aroclor-1260	831		µg/kg dry	24.2	1	"	"	"	"	"	X
37324-23-5	Aroclor-1262	BRL		µg/kg dry	24.2	1	"	"	"	"	"	X
11100-14-4	Aroclor-1268	BRL		µg/kg dry	24.2	1	"	"	"	"	"	X
Surrogate recoveries:												
10386-84-2	*4,4-DB-Octafluorobiphenyl (Sr)*	*109*			*30-150 %*		"	"	"	"	"	
10386-84-2	*4,4-DB-Octafluorobiphenyl (Sr) [2C]*	*102*			*30-150 %*		"	"	"	"	"	
2051-24-3	*Decachlorobiphenyl (Sr)*	*102*			*30-150 %*		"	"	"	"	"	
2051-24-3	*Decachlorobiphenyl (Sr) [2C]*	*92*			*30-150 %*		"	"	"	"	"	
General Chemistry Parameters												
	% Solids	82.5		%		1	SM2540 G Mod.	30-Mar-10	30-Mar-10	AB	1006685	

Sample Identification	Client Project #	Matrix	Collection Date/Time	Received
NWSBA Comp 3	[none]	Soil	29-Mar-10 12:12	29-Mar-10
SB09819-32				

CAS No.	Analyte(s)	Result	Flag	Units	*RDL	Dilution	Method Ref.	Prepared	Analyzed	Analyst	Batch	Cert.
Semivolatile Organic Compounds by GC												
Polychlorinated Biphenyls by SW846 8082 Prepared by method SW846 3540C												
12674-11-2	Aroclor-1016	BRL		µg/kg dry	22.7	1	SW846 8082	29-Mar-10	30-Mar-10	SM	1006649	X
11104-28-2	Aroclor-1221	BRL		µg/kg dry	22.7	1	"	"	"	"	"	X
11141-16-5	Aroclor-1232	BRL		µg/kg dry	22.7	1	"	"	"	"	"	X
53469-21-9	Aroclor-1242	BRL		µg/kg dry	22.7	1	"	"	"	"	"	X
12672-29-6	Aroclor-1248	BRL		µg/kg dry	22.7	1	"	"	"	"	"	X
11097-69-1	Aroclor-1254	2,890		µg/kg dry	22.7	1	"	"	"	"	"	X
11096-82-5	Aroclor-1260	1,510		µg/kg dry	22.7	1	"	"	"	"	"	X
37324-23-5	Aroclor-1262	BRL		µg/kg dry	22.7	1	"	"	"	"	"	X
11100-14-4	Aroclor-1268	BRL		µg/kg dry	22.7	1	"	"	"	"	"	X
Surrogate recoveries:												
10386-84-2	*4,4-DB-Octafluorobiphenyl (Sr)*	*101*			*30-150 %*		"	"	"	"	"	
10386-84-2	*4,4-DB-Octafluorobiphenyl (Sr) [2C]*	*97*			*30-150 %*		"	"	"	"	"	
2051-24-3	*Decachlorobiphenyl (Sr)*	*106*			*30-150 %*		"	"	"	"	"	
2051-24-3	*Decachlorobiphenyl (Sr) [2C]*	*97*			*30-150 %*		"	"	"	"	"	
General Chemistry Parameters												
	% Solids	84.2		%		1	SM2540 G Mod.	30-Mar-10	30-Mar-10	AB	1006685	

DPW Project Number: BI-RT-843
Appendix #3
Addendum #6

Sample Identification	Client Project #	Matrix	Collection Date/Time	Received
NWSBA Comp 4 SB09819-33	[none]	Soil	29-Mar-10 12:20	29-Mar-10

CAS No.	Analyte(s)	Result	Flag	Units	*RDL	Dilution	Method Ref.	Prepared	Analyzed	Analyst	Batch	Cert.
Semivolatile Organic Compounds by GC												
Polychlorinated Biphenyls by SW846 8082 Prepared by method SW846 3540C												
12674-11-2	Aroclor-1016	BRL		µg/kg dry	24.3	1	SW846 8082	29-Mar-10	30-Mar-10	SM	1006649	X
11104-28-2	Aroclor-1221	BRL		µg/kg dry	24.3	1	"	"	"	"	"	X
11141-16-5	Aroclor-1232	BRL		µg/kg dry	24.3	1	"	"	"	"	"	X
53469-21-9	Aroclor-1242	BRL		µg/kg dry	24.3	1	"	"	"	"	"	X
12672-29-6	Aroclor-1248	BRL		µg/kg dry	24.3	1	"	"	"	"	"	X
11097-69-1	Aroclor-1254	1,510		µg/kg dry	24.3	1	"	"	"	"	"	X
11096-82-5	Aroclor-1260	541		µg/kg dry	24.3	1	"	"	"	"	"	X
37324-23-5	Aroclor-1262	BRL		µg/kg dry	24.3	1	"	"	"	"	"	X
11100-14-4	Aroclor-1268	BRL		µg/kg dry	24.3	1	"	"	"	"	"	X
Surrogate recoveries:												
10386-84-2	*4,4-DB-Octafluorobiphenyl (Sr)*	*98*			*30-150 %*		"	"	"	"	"	
10386-84-2	*4,4-DB-Octafluorobiphenyl (Sr) [2C]*	*90*			*30-150 %*		"	"	"	"	"	
2051-24-3	*Decachlorobiphenyl (Sr)*	*101*			*30-150 %*		"	"	"	"	"	
2051-24-3	*Decachlorobiphenyl (Sr) [2C]*	*104*			*30-150 %*		"	"	"	"	"	
General Chemistry Parameters												
	% Solids	80.3		%		1	SM2540 G Mod.	30-Mar-10	30-Mar-10	AB	1006685	

Sample Identification	Client Project #	Matrix	Collection Date/Time	Received
NWSBA Comp 5 SB09819-34	[none]	Soil	29-Mar-10 12:25	29-Mar-10

CAS No.	Analyte(s)	Result	Flag	Units	*RDL	Dilution	Method Ref.	Prepared	Analyzed	Analyst	Batch	Cert.
Semivolatile Organic Compounds by GC												
Polychlorinated Biphenyls by SW846 8082 Prepared by method SW846 3540C												
12674-11-2	Aroclor-1016	BRL		µg/kg dry	23.0	1	SW846 8082	29-Mar-10	30-Mar-10	SM	1006649	X
11104-28-2	Aroclor-1221	BRL		µg/kg dry	23.0	1	"	"	"	"	"	X
11141-16-5	Aroclor-1232	BRL		µg/kg dry	23.0	1	"	"	"	"	"	X
53469-21-9	Aroclor-1242	BRL		µg/kg dry	23.0	1	"	"	"	"	"	X
12672-29-6	Aroclor-1248	BRL		µg/kg dry	23.0	1	"	"	"	"	"	X
11097-69-1	Aroclor-1254	3,560		µg/kg dry	23.0	1	"	"	"	"	"	X
11096-82-5	Aroclor-1260	1,230		µg/kg dry	23.0	1	"	"	"	"	"	X
37324-23-5	Aroclor-1262	BRL		µg/kg dry	23.0	1	"	"	"	"	"	X
11100-14-4	Aroclor-1268	BRL		µg/kg dry	23.0	1	"	"	"	"	"	X
Surrogate recoveries:												
10386-84-2	*4,4-DB-Octafluorobiphenyl (Sr)*	*99*			*30-150 %*		"	"	"	"	"	
10386-84-2	*4,4-DB-Octafluorobiphenyl (Sr) [2C]*	*97*			*30-150 %*		"	"	"	"	"	
2051-24-3	*Decachlorobiphenyl (Sr)*	*102*			*30-150 %*		"	"	"	"	"	
2051-24-3	*Decachlorobiphenyl (Sr) [2C]*	*94*			*30-150 %*		"	"	"	"	"	
General Chemistry Parameters												
	% Solids	80.2		%		1	SM2540 G Mod.	30-Mar-10	30-Mar-10	AB	1006685	

DPW Project Number: BI-RT-843
Appendix #3
Addendum #6

Sample Identification	Client Project #	Matrix	Collection Date/Time	Received
NWSBA Comp 6	[none]	Soil	29-Mar-10 12:28	29-Mar-10
SB09819-35				

CAS No.	*Analyte(s)*	*Result*	*Flag*	*Units*	**RDL*	*Dilution*	*Method Ref.*	*Prepared*	*Analyzed*	*Analyst*	*Batch*	*Cert.*
Semivolatile Organic Compounds by GC												
Polychlorinated Biphenyls by SW846 8082 Prepared by method SW846 3540C												
12674-11-2	Aroclor-1016	BRL		µg/kg dry	25.6	1	SW846 8082	29-Mar-10	30-Mar-10	SM	1006649	X
11104-28-2	Aroclor-1221	BRL		µg/kg dry	25.6	1	"	"	"	"	"	X
11141-16-5	Aroclor-1232	BRL		µg/kg dry	25.6	1	"	"	"	"	"	X
53469-21-9	Aroclor-1242	BRL		µg/kg dry	25.6	1	"	"	"	"	"	X
12672-29-6	Aroclor-1248	BRL		µg/kg dry	25.6	1	"	"	"	"	"	X
11097-69-1	Aroclor-1254	16,800	E	µg/kg dry	25.6	1	"	"	"	"	"	X
11096-82-5	Aroclor-1260	14,100	E	µg/kg dry	25.6	1	"	"	"	"	"	X
37324-23-5	Aroclor-1262	BRL		µg/kg dry	25.6	1	"	"	"	"	"	X
11100-14-4	Aroclor-1268	BRL		µg/kg dry	25.6	1	"	"	"	"	"	X
Surrogate recoveries:												
10386-84-2	*4,4-DB-Octafluorobiphenyl (Sr)*	*82*			*30-150 %*		"	"	"	"	"	
10386-84-2	*4,4-DB-Octafluorobiphenyl (Sr) [2C]*	*83*			*30-150 %*		"	"	"	"	"	
2051-24-3	*Decachlorobiphenyl (Sr)*	*119*			*30-150 %*		"	"	"	"	"	
2051-24-3	*Decachlorobiphenyl (Sr) [2C]*	*117*			*30-150 %*		"	"	"	"	"	
Re-analysis of Polychlorinated Biphenyls by SW846 8082 Prepared by method SW846 3540C												
12674-11-2	Aroclor-1016	BRL		µg/kg dry	512	20	SW846 8082	29-Mar-10	31-Mar-10	SM	1006649	X
11104-28-2	Aroclor-1221	BRL		µg/kg dry	512	20	"	"	"	"	"	X
11141-16-5	Aroclor-1232	BRL		µg/kg dry	512	20	"	"	"	"	"	X
53469-21-9	Aroclor-1242	BRL		µg/kg dry	512	20	"	"	"	"	"	X
12672-29-6	Aroclor-1248	BRL		µg/kg dry	512	20	"	"	"	"	"	X
11097-69-1	Aroclor-1254	17,800		µg/kg dry	512	20	"	"	"	"	"	X
37324-23-5	Aroclor-1262	BRL		µg/kg dry	512	20	"	"	"	"	"	X
11100-14-4	Aroclor-1268	BRL		µg/kg dry	512	20	"	"	"	"	"	X
Surrogate recoveries:												
10386-84-2	*4,4-DB-Octafluorobiphenyl (Sr)*	*90*			*30-150 %*		"	"	"	"	"	
10386-84-2	*4,4-DB-Octafluorobiphenyl (Sr) [2C]*	*100*			*30-150 %*		"	"	"	"	"	
2051-24-3	*Decachlorobiphenyl (Sr)*	*80*			*30-150 %*		"	"	"	"	"	
2051-24-3	*Decachlorobiphenyl (Sr) [2C]*	*140*			*30-150 %*		"	"	"	"	"	
General Chemistry Parameters												
	% Solids	77.5		%		1	SM2540 G Mod.	30-Mar-10	30-Mar-10	AB	1006685	

DPW Project Number: BI-RT-843
Appendix #3
Addendum #6

This laboratory report is not valid without an authorized signature on the cover page.

* Reportable Detection Limit BRL = Below Reporting Limit

Sample Identification	Client Project #	Matrix	Collection Date/Time	Received
NWSBA Comp 7 SB09819-36	[none]	Soil	29-Mar-10 12:35	29-Mar-10

CAS No.	Analyte(s)	Result	Flag	Units	*RDL	Dilution	Method Ref.	Prepared	Analyzed	Analyst	Batch	Cert.
Semivolatile Organic Compounds by GC												
Polychlorinated Biphenyls by SW846 8082 Prepared by method SW846 3540C												
12674-11-2	Aroclor-1016	BRL		µg/kg dry	23.5	1	SW846 8082	29-Mar-10	30-Mar-10	SM	1006649	X
11104-28-2	Aroclor-1221	BRL		µg/kg dry	23.5	1	"	"	"	"	"	X
11141-16-5	Aroclor-1232	BRL		µg/kg dry	23.5	1	"	"	"	"	"	X
53469-21-9	Aroclor-1242	BRL		µg/kg dry	23.5	1	"	"	"	"	"	X
12672-29-6	Aroclor-1248	BRL		µg/kg dry	23.5	1	"	"	"	"	"	X
11097-69-1	Aroclor-1254	3,010		µg/kg dry	23.5	1	"	"	"	"	"	X
11096-82-5	Aroclor-1260	800		µg/kg dry	23.5	1	"	"	"	"	"	X
37324-23-5	Aroclor-1262	BRL		µg/kg dry	23.5	1	"	"	"	"	"	X
11100-14-4	Aroclor-1268	BRL		µg/kg dry	23.5	1	"	"	"	"	"	X
Surrogate recoveries:												
10386-84-2	*4,4-DB-Octafluorobiphenyl (Sr)*	*111*			*30-150 %*		"	"	"	"	"	
10386-84-2	*4,4-DB-Octafluorobiphenyl (Sr) [2C]*	*103*			*30-150 %*		"	"	"	"	"	
2051-24-3	*Decachlorobiphenyl (Sr)*	*103*			*30-150 %*		"	"	"	"	"	
2051-24-3	*Decachlorobiphenyl (Sr) [2C]*	*96*			*30-150 %*		"	"	"	"	"	
General Chemistry Parameters												
	% Solids	82.0		%		1	SM2540 G Mod.	30-Mar-10	30-Mar-10	AB	1006685	

Sample Identification	Client Project #	Matrix	Collection Date/Time	Received
NWSBA Comp 8 SB09819-37	[none]	Soil	29-Mar-10 12:40	29-Mar-10

CAS No.	Analyte(s)	Result	Flag	Units	*RDL	Dilution	Method Ref.	Prepared	Analyzed	Analyst	Batch	Cert.
Semivolatile Organic Compounds by GC												
Polychlorinated Biphenyls by SW846 8082 Prepared by method SW846 3540C												
12674-11-2	Aroclor-1016	BRL		µg/kg dry	25.0	1	SW846 8082	29-Mar-10	30-Mar-10	SM	1006649	X
11104-28-2	Aroclor-1221	BRL		µg/kg dry	25.0	1	"	"	"	"	"	X
11141-16-5	Aroclor-1232	BRL		µg/kg dry	25.0	1	"	"	"	"	"	X
53469-21-9	Aroclor-1242	BRL		µg/kg dry	25.0	1	"	"	"	"	"	X
12672-29-6	Aroclor-1248	BRL		µg/kg dry	25.0	1	"	"	"	"	"	X
11097-69-1	Aroclor-1254	4,340		µg/kg dry	25.0	1	"	"	"	"	"	X
11096-82-5	Aroclor-1260	2,230		µg/kg dry	25.0	1	"	"	"	"	"	X
37324-23-5	Aroclor-1262	BRL		µg/kg dry	25.0	1	"	"	"	"	"	X
11100-14-4	Aroclor-1268	BRL		µg/kg dry	25.0	1	"	"	"	"	"	X
Surrogate recoveries:												
10386-84-2	*4,4-DB-Octafluorobiphenyl (Sr)*	*93*			*30-150 %*		"	"	"	"	"	
10386-84-2	*4,4-DB-Octafluorobiphenyl (Sr) [2C]*	*102*			*30-150 %*		"	"	"	"	"	
2051-24-3	*Decachlorobiphenyl (Sr)*	*110*			*30-150 %*		"	"	"	"	"	
2051-24-3	*Decachlorobiphenyl (Sr) [2C]*	*101*			*30-150 %*		"	"	"	"	"	
General Chemistry Parameters												
	% Solids	77.5		%		1	SM2540 G Mod.	30-Mar-10	30-Mar-10	AB	1006685	

DPW Project Number: BI-RT-843
Appendix #3
Addendum #6

This laboratory report is not valid without an authorized signature on the cover page.

* Reportable Detection Limit BRL = Below Reporting Limit

Sample Identification	Client Project #	Matrix	Collection Date/Time	Received
NWSBA Comp 9	[none]	Soil	29-Mar-10 12:44	29-Mar-10
SB09819-38				

CAS No.	*Analyte(s)*	*Result*	*Flag*	*Units*	**RDL*	*Dilution*	*Method Ref.*	*Prepared*	*Analyzed*	*Analyst*	*Batch*	*Cert.*
Semivolatile Organic Compounds by GC												
Polychlorinated Biphenyls by SW846 8082 Prepared by method SW846 3540C												
12674-11-2	Aroclor-1016	BRL		µg/kg dry	25.0	1	SW846 8082	29-Mar-10	30-Mar-10	SM	1006649	X
11104-28-2	Aroclor-1221	BRL		µg/kg dry	25.0	1	"	"	"	"	"	X
11141-16-5	Aroclor-1232	BRL		µg/kg dry	25.0	1	"	"	"	"	"	X
53469-21-9	Aroclor-1242	BRL		µg/kg dry	25.0	1	"	"	"	"	"	X
12672-29-6	Aroclor-1248	BRL		µg/kg dry	25.0	1	"	"	"	"	"	X
11097-69-1	Aroclor-1254	16,800	E	µg/kg dry	25.0	1	"	"	"	"	"	X
11096-82-5	Aroclor-1260	3,280	E	µg/kg dry	25.0	1	"	"	"	"	"	X
37324-23-5	Aroclor-1262	BRL		µg/kg dry	25.0	1	"	"	"	"	"	X
11100-14-4	Aroclor-1268	BRL		µg/kg dry	25.0	1	"	"	"	"	"	X
Surrogate recoveries:												
10386-84-2	*4,4-DB-Octafluorobiphenyl (Sr)*	*87*			*30-150 %*		"	"	"	"	"	
10386-84-2	*4,4-DB-Octafluorobiphenyl (Sr) [2C]*	*98*			*30-150 %*		"	"	"	"	"	
2051-24-3	*Decachlorobiphenyl (Sr)*	*117*			*30-150 %*		"	"	"	"	"	
2051-24-3	*Decachlorobiphenyl (Sr) [2C]*	*98*			*30-150 %*		"	"	"	"	"	
Re-analysis of Polychlorinated Biphenyls by SW846 8082 Prepared by method SW846 3540C												
12674-11-2	Aroclor-1016	BRL		µg/kg dry	250	10	SW846 8082	29-Mar-10	31-Mar-10	SM	1006649	X
11104-28-2	Aroclor-1221	BRL		µg/kg dry	250	10	"	"	"	"	"	X
11141-16-5	Aroclor-1232	BRL		µg/kg dry	250	10	"	"	"	"	"	X
53469-21-9	Aroclor-1242	BRL		µg/kg dry	250	10	"	"	"	"	"	X
12672-29-6	Aroclor-1248	BRL		µg/kg dry	250	10	"	"	"	"	"	X
11097-69-1	Aroclor-1254	15,600		µg/kg dry	250	10	"	"	"	"	"	X
37324-23-5	Aroclor-1262	BRL		µg/kg dry	250	10	"	"	"	"	"	X
11100-14-4	Aroclor-1268	BRL		µg/kg dry	250	10	"	"	"	"	"	X
Surrogate recoveries:												
10386-84-2	*4,4-DB-Octafluorobiphenyl (Sr)*	*75*			*30-150 %*		"	"	"	"	"	
10386-84-2	*4,4-DB-Octafluorobiphenyl (Sr) [2C]*	*105*			*30-150 %*		"	"	"	"	"	
2051-24-3	*Decachlorobiphenyl (Sr)*	*95*			*30-150 %*		"	"	"	"	"	
2051-24-3	*Decachlorobiphenyl (Sr) [2C]*	*100*			*30-150 %*		"	"	"	"	"	
General Chemistry Parameters												
	% Solids	75.2		%		1	SM2540 G Mod.	30-Mar-10	30-Mar-10	AB	1006685	

DPW Project Number: BI-RT-843
Appendix #3
Addendum #6

Sample Identification	Client Project #	Matrix	Collection Date/Time	Received
NWSBA Comp 10	[none]	Soil	29-Mar-10 12:50	29-Mar-10
SB09819-39				

CAS No.	*Analyte(s)*	*Result*	*Flag*	*Units*	**RDL*	*Dilution*	*Method Ref.*	*Prepared*	*Analyzed*	*Analyst*	*Batch*	*Cert.*
Semivolatile Organic Compounds by GC												
Polychlorinated Biphenyls by SW846 8082 Prepared by method SW846 3540C												
12674-11-2	Aroclor-1016	BRL		µg/kg dry	26.1	1	SW846 8082	29-Mar-10	30-Mar-10	SM	1006649	X
11104-28-2	Aroclor-1221	BRL		µg/kg dry	26.1	1	"	"	"	"	"	X
11141-16-5	Aroclor-1232	BRL		µg/kg dry	26.1	1	"	"	"	"	"	X
53469-21-9	Aroclor-1242	BRL		µg/kg dry	26.1	1	"	"	"	"	"	X
12672-29-6	Aroclor-1248	BRL		µg/kg dry	26.1	1	"	"	"	"	"	X
11097-69-1	Aroclor-1254	8,440	E	µg/kg dry	26.1	1	"	"	"	"	"	X
11096-82-5	Aroclor-1260	2,090		µg/kg dry	26.1	1	"	"	"	"	"	X
37324-23-5	Aroclor-1262	BRL		µg/kg dry	26.1	1	"	"	"	"	"	X
11100-14-4	Aroclor-1268	BRL		µg/kg dry	26.1	1	"	"	"	"	"	X
Surrogate recoveries:												
10386-84-2	*4,4-DB-Octafluorobiphenyl (Sr)*	*91*			*30-150 %*		"	"	"	"	"	
10386-84-2	*4,4-DB-Octafluorobiphenyl (Sr) [2C]*	*91*			*30-150 %*		"	"	"	"	"	
2051-24-3	*Decachlorobiphenyl (Sr)*	*86*			*30-150 %*		"	"	"	"	"	
2051-24-3	*Decachlorobiphenyl (Sr) [2C]*	*89*			*30-150 %*		"	"	"	"	"	
Re-analysis of Polychlorinated Biphenyls by SW846 8082 Prepared by method SW846 3540C												
12674-11-2	Aroclor-1016	BRL		µg/kg dry	131	5	SW846 8082	29-Mar-10	31-Mar-10	SM	1006649	X
11104-28-2	Aroclor-1221	BRL		µg/kg dry	131	5	"	"	"	"	"	X
11141-16-5	Aroclor-1232	BRL		µg/kg dry	131	5	"	"	"	"	"	X
53469-21-9	Aroclor-1242	BRL		µg/kg dry	131	5	"	"	"	"	"	X
12672-29-6	Aroclor-1248	BRL		µg/kg dry	131	5	"	"	"	"	"	X
11097-69-1	Aroclor-1254	6,940		µg/kg dry	131	5	"	"	"	"	"	X
11096-82-5	Aroclor-1260	1,870		µg/kg dry	131	5	"	"	"	"	"	X
37324-23-5	Aroclor-1262	BRL		µg/kg dry	131	5	"	"	"	"	"	X
11100-14-4	Aroclor-1268	BRL		µg/kg dry	131	5	"	"	"	"	"	X
Surrogate recoveries:												
10386-84-2	*4,4-DB-Octafluorobiphenyl (Sr)*	*75*			*30-150 %*		"	"	"	"	"	
10386-84-2	*4,4-DB-Octafluorobiphenyl (Sr) [2C]*	*82*			*30-150 %*		"	"	"	"	"	
2051-24-3	*Decachlorobiphenyl (Sr)*	*77*			*30-150 %*		"	"	"	"	"	
2051-24-3	*Decachlorobiphenyl (Sr) [2C]*	*90*			*30-150 %*		"	"	"	"	"	
General Chemistry Parameters												
	% Solids	76.0		%		1	SM2540 G Mod.	30-Mar-10	30-Mar-10	AB	1006685	

DPW Project Number: BI-RT-843
Appendix #3
Addendum #6

This laboratory report is not valid without an authorized signature on the cover page.

* Reportable Detection Limit BRL = Below Reporting Limit

Sample Identification	Client Project #	Matrix	Collection Date/Time	Received
NWSBA Comp 11 SB09819-40	[none]	Soil	29-Mar-10 12:55	29-Mar-10

CAS No.	Analyte(s)	Result	Flag	Units	*RDL	Dilution	Method Ref.	Prepared	Analyzed	Analyst	Batch	Cert.
Semivolatile Organic Compounds by GC												
Polychlorinated Biphenyls by SW846 8082 Prepared by method SW846 3540C												
12674-11-2	Aroclor-1016	BRL		µg/kg dry	26.6	1	SW846 8082	29-Mar-10	30-Mar-10	SM	1006649	X
11104-28-2	Aroclor-1221	BRL		µg/kg dry	26.6	1	"	"	"	"	"	X
11141-16-5	Aroclor-1232	BRL		µg/kg dry	26.6	1	"	"	"	"	"	X
53469-21-9	Aroclor-1242	BRL		µg/kg dry	26.6	1	"	"	"	"	"	X
12672-29-6	Aroclor-1248	BRL		µg/kg dry	26.6	1	"	"	"	"	"	X
11097-69-1	Aroclor-1254	3,340		µg/kg dry	26.6	1	"	"	"	"	"	X
11096-82-5	Aroclor-1260	1,070		µg/kg dry	26.6	1	"	"	"	"	"	X
37324-23-5	Aroclor-1262	BRL		µg/kg dry	26.6	1	"	"	"	"	"	X
11100-14-4	Aroclor-1268	BRL		µg/kg dry	26.6	1	"	"	"	"	"	X
Surrogate recoveries:												
10386-84-2	*4,4-DB-Octafluorobiphenyl (Sr)*	*101*			*30-150 %*		"	"	"	"	"	
10386-84-2	*4,4-DB-Octafluorobiphenyl (Sr) [2C]*	*94*			*30-150 %*		"	"	"	"	"	
2051-24-3	*Decachlorobiphenyl (Sr)*	*87*			*30-150 %*		"	"	"	"	"	
2051-24-3	*Decachlorobiphenyl (Sr) [2C]*	*90*			*30-150 %*		"	"	"	"	"	
General Chemistry Parameters												
	% Solids	71.7		%		1	SM2540 G Mod.	30-Mar-10	30-Mar-10	AB	1006685	

Sample Identification	Client Project #	Matrix	Collection Date/Time	Received
NWSBA Comp 12 SB09819-41	[none]	Soil	29-Mar-10 13:00	29-Mar-10

CAS No.	Analyte(s)	Result	Flag	Units	*RDL	Dilution	Method Ref.	Prepared	Analyzed	Analyst	Batch	Cert.
Semivolatile Organic Compounds by GC												
Polychlorinated Biphenyls by SW846 8082 Prepared by method SW846 3540C												
12674-11-2	Aroclor-1016	BRL		µg/kg dry	26.4	1	SW846 8082	29-Mar-10	30-Mar-10	SM	1006649	X
11104-28-2	Aroclor-1221	BRL		µg/kg dry	26.4	1	"	"	"	"	"	X
11141-16-5	Aroclor-1232	BRL		µg/kg dry	26.4	1	"	"	"	"	"	X
53469-21-9	Aroclor-1242	BRL		µg/kg dry	26.4	1	"	"	"	"	"	X
12672-29-6	Aroclor-1248	BRL		µg/kg dry	26.4	1	"	"	"	"	"	X
11097-69-1	Aroclor-1254	1,420		µg/kg dry	26.4	1	"	"	"	"	"	X
11096-82-5	Aroclor-1260	664		µg/kg dry	26.4	1	"	"	"	"	"	X
37324-23-5	Aroclor-1262	BRL		µg/kg dry	26.4	1	"	"	"	"	"	X
11100-14-4	Aroclor-1268	BRL		µg/kg dry	26.4	1	"	"	"	"	"	X
Surrogate recoveries:												
10386-84-2	*4,4-DB-Octafluorobiphenyl (Sr)*	*98*			*30-150 %*		"	"	"	"	"	
10386-84-2	*4,4-DB-Octafluorobiphenyl (Sr) [2C]*	*89*			*30-150 %*		"	"	"	"	"	
2051-24-3	*Decachlorobiphenyl (Sr)*	*86*			*30-150 %*		"	"	"	"	"	
2051-24-3	*Decachlorobiphenyl (Sr) [2C]*	*80*			*30-150 %*		"	"	"	"	"	
General Chemistry Parameters												
	% Solids	71.4		%		1	SM2540 G Mod.	30-Mar-10	30-Mar-10	AB	1006685	

DPW Project Number: BI-RT-843
Appendix #3
Addendum #6

Sample Identification	Client Project #	Matrix	Collection Date/Time	Received
FB032810 SB09819-42	[none]	Ground Water	28-Mar-10 17:00	29-Mar-10

CAS No.	Analyte(s)	Result	Flag	Units	*RDL	Dilution	Method Ref.	Prepared	Analyzed	Analyst	Batch	Cert.
Semivolatile Organic Compounds by GC												
Polychlorinated Biphenyls by SW846 8082 Prepared by method SW846 3510C												
12674-11-2	Aroclor-1016	BRL		µg/l	0.206	1	SW846 8082	30-Mar-10	30-Mar-10	SM	1006667	X
11104-28-2	Aroclor-1221	BRL		µg/l	0.206	1	"	"	"	"	"	X
11141-16-5	Aroclor-1232	BRL		µg/l	0.206	1	"	"	"	"	"	X
53469-21-9	Aroclor-1242	BRL		µg/l	0.206	1	"	"	"	"	"	X
12672-29-6	Aroclor-1248	BRL		µg/l	0.206	1	"	"	"	"	"	X
11097-69-1	Aroclor-1254	BRL		µg/l	0.206	1	"	"	"	"	"	X
11096-82-5	Aroclor-1260	BRL		µg/l	0.206	1	"	"	"	"	"	X
37324-23-5	Aroclor-1262	BRL		µg/l	0.206	1	"	"	"	"	"	X
11100-14-4	Aroclor-1268	BRL		µg/l	0.206	1	"	"	"	"	"	X
Surrogate recoveries:												
10386-84-2	*4,4-DB-Octafluorobiphenyl (Sr)*	*86*			*30-150 %*		"	"	"	"	"	
10386-84-2	*4,4-DB-Octafluorobiphenyl (Sr) [2C]*	*84*			*30-150 %*		"	"	"	"	"	
2051-24-3	*Decachlorobiphenyl (Sr)*	*84*			*30-150 %*		"	"	"	"	"	
2051-24-3	*Decachlorobiphenyl (Sr) [2C]*	*75*			*30-150 %*		"	"	"	"	"	

Sample Identification	Client Project #	Matrix	Collection Date/Time	Received
NESBA Comp 1 SB09819-43	[none]	Soil	29-Mar-10 13:20	29-Mar-10

CAS No.	Analyte(s)	Result	Flag	Units	*RDL	Dilution	Method Ref.	Prepared	Analyzed	Analyst	Batch	Cert.
Semivolatile Organic Compounds by GC												
Polychlorinated Biphenyls by SW846 8082 Prepared by method SW846 3540C												
12674-11-2	Aroclor-1016	BRL		µg/kg dry	24.7	1	SW846 8082	29-Mar-10	30-Mar-10	SM	1006649	X
11104-28-2	Aroclor-1221	BRL		µg/kg dry	24.7	1	"	"	"	"	"	X
11141-16-5	Aroclor-1232	BRL		µg/kg dry	24.7	1	"	"	"	"	"	X
53469-21-9	Aroclor-1242	BRL		µg/kg dry	24.7	1	"	"	"	"	"	X
12672-29-6	Aroclor-1248	BRL		µg/kg dry	24.7	1	"	"	"	"	"	X
11097-69-1	Aroclor-1254	1,520		µg/kg dry	24.7	1	"	"	"	"	"	X
11096-82-5	Aroclor-1260	709		µg/kg dry	24.7	1	"	"	"	"	"	X
37324-23-5	Aroclor-1262	BRL		µg/kg dry	24.7	1	"	"	"	"	"	X
11100-14-4	Aroclor-1268	BRL		µg/kg dry	24.7	1	"	"	"	"	"	X
Surrogate recoveries:												
10386-84-2	*4,4-DB-Octafluorobiphenyl (Sr)*	*102*			*30-150 %*		"	"	"	"	"	
10386-84-2	*4,4-DB-Octafluorobiphenyl (Sr) [2C]*	*94*			*30-150 %*		"	"	"	"	"	
2051-24-3	*Decachlorobiphenyl (Sr)*	*101*			*30-150 %*		"	"	"	"	"	
2051-24-3	*Decachlorobiphenyl (Sr) [2C]*	*91*			*30-150 %*		"	"	"	"	"	
General Chemistry Parameters												
	% Solids	80.4		%		1	SM2540 G Mod.	30-Mar-10	30-Mar-10	AB	1006685	

DPW Project Number: BI-RT-843
Appendix #3
Addendum #6

Sample Identification	Client Project #	Matrix	Collection Date/Time	Received
NESBA Comp 2	[none]	Soil	29-Mar-10 13:25	29-Mar-10
SB09819-44				

CAS No.	Analyte(s)	Result	Flag	Units	*RDL	Dilution	Method Ref.	Prepared	Analyzed	Analyst	Batch	Cert.
Semivolatile Organic Compounds by GC												
Polychlorinated Biphenyls by SW846 8082 Prepared by method SW846 3540C												
12674-11-2	Aroclor-1016	BRL		µg/kg dry	24.6	1	SW846 8082	29-Mar-10	30-Mar-10	SM	1006649	X
11104-28-2	Aroclor-1221	BRL		µg/kg dry	24.6	1	"	"	"	"	"	X
11141-16-5	Aroclor-1232	BRL		µg/kg dry	24.6	1	"	"	"	"	"	X
53469-21-9	Aroclor-1242	BRL		µg/kg dry	24.6	1	"	"	"	"	"	X
12672-29-6	Aroclor-1248	BRL		µg/kg dry	24.6	1	"	"	"	"	"	X
11097-69-1	Aroclor-1254	297		µg/kg dry	24.6	1	"	"	"	"	"	X
11096-82-5	Aroclor-1260	327		µg/kg dry	24.6	1	"	"	"	"	"	X
37324-23-5	Aroclor-1262	BRL		µg/kg dry	24.6	1	"	"	"	"	"	X
11100-14-4	Aroclor-1268	BRL		µg/kg dry	24.6	1	"	"	"	"	"	X
Surrogate recoveries:												
10386-84-2	*4,4-DB-Octafluorobiphenyl (Sr)*	*84*			*30-150 %*		"	"	"	"	"	
10386-84-2	*4,4-DB-Octafluorobiphenyl (Sr) [2C]*	*97*			*30-150 %*		"	"	"	"	"	
2051-24-3	*Decachlorobiphenyl (Sr)*	*100*			*30-150 %*		"	"	"	"	"	
2051-24-3	*Decachlorobiphenyl (Sr) [2C]*	*92*			*30-150 %*		"	"	"	"	"	
General Chemistry Parameters												
	% Solids	80.6		%		1	SM2540 G Mod.	30-Mar-10	30-Mar-10	AB	1006685	

Sample Identification	Client Project #	Matrix	Collection Date/Time	Received
NESBA Comp 3	[none]	Soil	29-Mar-10 13:30	29-Mar-10
SB09819-45				

CAS No.	Analyte(s)	Result	Flag	Units	*RDL	Dilution	Method Ref.	Prepared	Analyzed	Analyst	Batch	Cert.
Semivolatile Organic Compounds by GC												
Polychlorinated Biphenyls by SW846 8082 Prepared by method SW846 3540C												
12674-11-2	Aroclor-1016	BRL		µg/kg dry	22.7	1	SW846 8082	29-Mar-10	30-Mar-10	SM	1006649	X
11104-28-2	Aroclor-1221	BRL		µg/kg dry	22.7	1	"	"	"	"	"	X
11141-16-5	Aroclor-1232	BRL		µg/kg dry	22.7	1	"	"	"	"	"	X
53469-21-9	Aroclor-1242	BRL		µg/kg dry	22.7	1	"	"	"	"	"	X
12672-29-6	Aroclor-1248	BRL		µg/kg dry	22.7	1	"	"	"	"	"	X
11097-69-1	Aroclor-1254	395		µg/kg dry	22.7	1	"	"	"	"	"	X
11096-82-5	Aroclor-1260	486		µg/kg dry	22.7	1	"	"	"	"	"	X
37324-23-5	Aroclor-1262	BRL		µg/kg dry	22.7	1	"	"	"	"	"	X
11100-14-4	Aroclor-1268	BRL		µg/kg dry	22.7	1	"	"	"	"	"	X
Surrogate recoveries:												
10386-84-2	*4,4-DB-Octafluorobiphenyl (Sr)*	*105*			*30-150 %*		"	"	"	"	"	
10386-84-2	*4,4-DB-Octafluorobiphenyl (Sr) [2C]*	*99*			*30-150 %*		"	"	"	"	"	
2051-24-3	*Decachlorobiphenyl (Sr)*	*104*			*30-150 %*		"	"	"	"	"	
2051-24-3	*Decachlorobiphenyl (Sr) [2C]*	*101*			*30-150 %*		"	"	"	"	"	
General Chemistry Parameters												
	% Solids	81.4		%		1	SM2540 G Mod.	30-Mar-10	30-Mar-10	AB	1006685	

DPW Project Number: BI-RT-843
Appendix #3
Addendum #6

Sample Identification	Client Project #	Matrix	Collection Date/Time	Received
NESBA Comp 4 SB09819-46	[none]	Soil	29-Mar-10 13:33	29-Mar-10

CAS No.	Analyte(s)	Result	Flag	Units	*RDL	Dilution	Method Ref.	Prepared	Analyzed	Analyst	Batch	Cert.
Semivolatile Organic Compounds by GC												
Polychlorinated Biphenyls by SW846 8082 Prepared by method SW846 3540C												
12674-11-2	Aroclor-1016	BRL		µg/kg dry	23.7	1	SW846 8082	29-Mar-10	30-Mar-10	SM	1006649	X
11104-28-2	Aroclor-1221	BRL		µg/kg dry	23.7	1	"	"	"	"	"	X
11141-16-5	Aroclor-1232	BRL		µg/kg dry	23.7	1	"	"	"	"	"	X
53469-21-9	Aroclor-1242	BRL		µg/kg dry	23.7	1	"	"	"	"	"	X
12672-29-6	Aroclor-1248	BRL		µg/kg dry	23.7	1	"	"	"	"	"	X
11097-69-1	Aroclor-1254	215		µg/kg dry	23.7	1	"	"	"	"	"	X
11096-82-5	Aroclor-1260	566		µg/kg dry	23.7	1	"	"	"	"	"	X
37324-23-5	Aroclor-1262	BRL		µg/kg dry	23.7	1	"	"	"	"	"	X
11100-14-4	Aroclor-1268	BRL		µg/kg dry	23.7	1	"	"	"	"	"	X
Surrogate recoveries:												
10386-84-2	*4,4-DB-Octafluorobiphenyl (Sr)*	*98*			*30-150 %*		"	"	"	"	"	
10386-84-2	*4,4-DB-Octafluorobiphenyl (Sr) [2C]*	*90*			*30-150 %*		"	"	"	"	"	
2051-24-3	*Decachlorobiphenyl (Sr)*	*104*			*30-150 %*		"	"	"	"	"	
2051-24-3	*Decachlorobiphenyl (Sr) [2C]*	*105*			*30-150 %*		"	"	"	"	"	
General Chemistry Parameters												
	% Solids	80.7		%		1	SM2540 G Mod.	30-Mar-10	30-Mar-10	AB	1006685	

Sample Identification	Client Project #	Matrix	Collection Date/Time	Received
NESBA Comp 5 SB09819-47	[none]	Soil	29-Mar-10 13:35	29-Mar-10

CAS No.	Analyte(s)	Result	Flag	Units	*RDL	Dilution	Method Ref.	Prepared	Analyzed	Analyst	Batch	Cert.
Semivolatile Organic Compounds by GC												
Polychlorinated Biphenyls by SW846 8082 Prepared by method SW846 3540C												
12674-11-2	Aroclor-1016	BRL		µg/kg dry	23.9	1	SW846 8082	29-Mar-10	30-Mar-10	SM	1006649	X
11104-28-2	Aroclor-1221	BRL		µg/kg dry	23.9	1	"	"	"	"	"	X
11141-16-5	Aroclor-1232	BRL		µg/kg dry	23.9	1	"	"	"	"	"	X
53469-21-9	Aroclor-1242	BRL		µg/kg dry	23.9	1	"	"	"	"	"	X
12672-29-6	Aroclor-1248	BRL		µg/kg dry	23.9	1	"	"	"	"	"	X
11097-69-1	Aroclor-1254	377		µg/kg dry	23.9	1	"	"	"	"	"	X
11096-82-5	Aroclor-1260	516		µg/kg dry	23.9	1	"	"	"	"	"	X
37324-23-5	Aroclor-1262	BRL		µg/kg dry	23.9	1	"	"	"	"	"	X
11100-14-4	Aroclor-1268	BRL		µg/kg dry	23.9	1	"	"	"	"	"	X
Surrogate recoveries:												
10386-84-2	*4,4-DB-Octafluorobiphenyl (Sr)*	*80*			*30-150 %*		"	"	"	"	"	
10386-84-2	*4,4-DB-Octafluorobiphenyl (Sr) [2C]*	*89*			*30-150 %*		"	"	"	"	"	
2051-24-3	*Decachlorobiphenyl (Sr)*	*102*			*30-150 %*		"	"	"	"	"	
2051-24-3	*Decachlorobiphenyl (Sr) [2C]*	*91*			*30-150 %*		"	"	"	"	"	
General Chemistry Parameters												
	% Solids	81.2		%		1	SM2540 G Mod.	30-Mar-10	30-Mar-10	AB	1006685	

DPW Project Number: BI-RT-843
Appendix #3
Addendum #6

Sample Identification	Client Project #	Matrix	Collection Date/Time	Received
NESBA Comp 6 SB09819-48	[none]	Soil	29-Mar-10 13:40	29-Mar-10

CAS No.	Analyte(s)	Result	Flag	Units	*RDL	Dilution	Method Ref.	Prepared	Analyzed	Analyst	Batch	Cert.
Semivolatile Organic Compounds by GC												
Polychlorinated Biphenyls by SW846 8082 Prepared by method SW846 3540C												
12674-11-2	Aroclor-1016	BRL		µg/kg dry	23.9	1	SW846 8082	29-Mar-10	30-Mar-10	SM	1006649	X
11104-28-2	Aroclor-1221	BRL		µg/kg dry	23.9	1	"	"	"	"	"	X
11141-16-5	Aroclor-1232	BRL		µg/kg dry	23.9	1	"	"	"	"	"	X
53469-21-9	Aroclor-1242	BRL		µg/kg dry	23.9	1	"	"	"	"	"	X
12672-29-6	Aroclor-1248	BRL		µg/kg dry	23.9	1	"	"	"	"	"	X
11097-69-1	Aroclor-1254	1,620		µg/kg dry	23.9	1	"	"	"	"	"	X
11096-82-5	Aroclor-1260	897		µg/kg dry	23.9	1	"	"	"	"	"	X
37324-23-5	Aroclor-1262	BRL		µg/kg dry	23.9	1	"	"	"	"	"	X
11100-14-4	Aroclor-1268	BRL		µg/kg dry	23.9	1	"	"	"	"	"	X
Surrogate recoveries:												
10386-84-2	*4,4-DB-Octafluorobiphenyl (Sr)*	*85*			*30-150 %*		"	"	"	"	"	
10386-84-2	*4,4-DB-Octafluorobiphenyl (Sr) [2C]*	*102*			*30-150 %*		"	"	"	"	"	
2051-24-3	*Decachlorobiphenyl (Sr)*	*110*			*30-150 %*		"	"	"	"	"	
2051-24-3	*Decachlorobiphenyl (Sr) [2C]*	*100*			*30-150 %*		"	"	"	"	"	
General Chemistry Parameters												
	% Solids	80.8		%		1	SM2540 G Mod.	30-Mar-10	30-Mar-10	AB	1006685	

Sample Identification	Client Project #	Matrix	Collection Date/Time	Received
NESBA Comp 7 SB09819-49	[none]	Soil	29-Mar-10 13:43	29-Mar-10

CAS No.	Analyte(s)	Result	Flag	Units	*RDL	Dilution	Method Ref.	Prepared	Analyzed	Analyst	Batch	Cert.
Semivolatile Organic Compounds by GC												
Polychlorinated Biphenyls by SW846 8082 Prepared by method SW846 3540C												
12674-11-2	Aroclor-1016	BRL		µg/kg dry	24.3	1	SW846 8082	29-Mar-10	30-Mar-10	IMR	1006650	X
11104-28-2	Aroclor-1221	BRL		µg/kg dry	24.3	1	"	"	"	"	"	X
11141-16-5	Aroclor-1232	BRL		µg/kg dry	24.3	1	"	"	"	"	"	X
53469-21-9	Aroclor-1242	BRL		µg/kg dry	24.3	1	"	"	"	"	"	X
12672-29-6	Aroclor-1248	BRL		µg/kg dry	24.3	1	"	"	"	"	"	X
11097-69-1	Aroclor-1254	655		µg/kg dry	24.3	1	"	"	"	"	"	X
11096-82-5	Aroclor-1260	809		µg/kg dry	24.3	1	"	"	"	"	"	X
37324-23-5	Aroclor-1262	BRL		µg/kg dry	24.3	1	"	"	"	"	"	X
11100-14-4	Aroclor-1268	BRL		µg/kg dry	24.3	1	"	"	"	"	"	X
Surrogate recoveries:												
10386-84-2	*4,4-DB-Octafluorobiphenyl (Sr)*	*103*			*30-150 %*		"	"	"	"	"	
10386-84-2	*4,4-DB-Octafluorobiphenyl (Sr) [2C]*	*111*			*30-150 %*		"	"	"	"	"	
2051-24-3	*Decachlorobiphenyl (Sr)*	*115*			*30-150 %*		"	"	"	"	"	
2051-24-3	*Decachlorobiphenyl (Sr) [2C]*	*115*			*30-150 %*		"	"	"	"	"	
General Chemistry Parameters												
	% Solids	81.9		%		1	SM2540 G Mod.	30-Mar-10	30-Mar-10	AB	1006686	

DPW Project Number: BI-RT-843
Appendix #3
Addendum #6

Sample Identification	Client Project #	Matrix	Collection Date/Time	Received
NESBA Comp 8 SB09819-50	[none]	Soil	29-Mar-10 13:45	29-Mar-10

CAS No.	Analyte(s)	Result	Flag	Units	*RDL	Dilution	Method Ref.	Prepared	Analyzed	Analyst	Batch	Cert.
Semivolatile Organic Compounds by GC												
Polychlorinated Biphenyls by SW846 8082 Prepared by method SW846 3540C												
12674-11-2	Aroclor-1016	BRL		µg/kg dry	23.9	1	SW846 8082	29-Mar-10	30-Mar-10	IMR	1006650	X
11104-28-2	Aroclor-1221	BRL		µg/kg dry	23.9	1	"	"	"	"	"	X
11141-16-5	Aroclor-1232	BRL		µg/kg dry	23.9	1	"	"	"	"	"	X
53469-21-9	Aroclor-1242	BRL		µg/kg dry	23.9	1	"	"	"	"	"	X
12672-29-6	Aroclor-1248	BRL		µg/kg dry	23.9	1	"	"	"	"	"	X
11097-69-1	Aroclor-1254	1,750		µg/kg dry	23.9	1	"	"	"	"	"	X
11096-82-5	Aroclor-1260	825		µg/kg dry	23.9	1	"	"	"	"	"	X
37324-23-5	Aroclor-1262	BRL		µg/kg dry	23.9	1	"	"	"	"	"	X
11100-14-4	Aroclor-1268	BRL		µg/kg dry	23.9	1	"	"	"	"	"	X
Surrogate recoveries:												
10386-84-2	*4,4-DB-Octafluorobiphenyl (Sr)*	*102*			*30-150 %*		"	"	"	"	"	
10386-84-2	*4,4-DB-Octafluorobiphenyl (Sr) [2C]*	*110*			*30-150 %*		"	"	"	"	"	
2051-24-3	*Decachlorobiphenyl (Sr)*	*104*			*30-150 %*		"	"	"	"	"	
2051-24-3	*Decachlorobiphenyl (Sr) [2C]*	*106*			*30-150 %*		"	"	"	"	"	
General Chemistry Parameters												
	% Solids	81.2		%		1	SM2540 G Mod.	30-Mar-10	30-Mar-10	AB	1006686	

Sample Identification	Client Project #	Matrix	Collection Date/Time	Received
NSBB Comp 1 SB09819-51	[none]	Soil	29-Mar-10 13:50	29-Mar-10

CAS No.	Analyte(s)	Result	Flag	Units	*RDL	Dilution	Method Ref.	Prepared	Analyzed	Analyst	Batch	Cert.
Semivolatile Organic Compounds by GC												
Polychlorinated Biphenyls by SW846 8082 Prepared by method SW846 3540C												
12674-11-2	Aroclor-1016	BRL		µg/kg dry	23.1	1	SW846 8082	29-Mar-10	30-Mar-10	IMR	1006650	X
11104-28-2	Aroclor-1221	BRL		µg/kg dry	23.1	1	"	"	"	"	"	X
11141-16-5	Aroclor-1232	BRL		µg/kg dry	23.1	1	"	"	"	"	"	X
53469-21-9	Aroclor-1242	BRL		µg/kg dry	23.1	1	"	"	"	"	"	X
12672-29-6	Aroclor-1248	BRL		µg/kg dry	23.1	1	"	"	"	"	"	X
11097-69-1	Aroclor-1254	2,290		µg/kg dry	23.1	1	"	"	"	"	"	X
11096-82-5	Aroclor-1260	259		µg/kg dry	23.1	1	"	"	"	"	"	X
37324-23-5	Aroclor-1262	BRL		µg/kg dry	23.1	1	"	"	"	"	"	X
11100-14-4	Aroclor-1268	BRL		µg/kg dry	23.1	1	"	"	"	"	"	X
Surrogate recoveries:												
10386-84-2	*4,4-DB-Octafluorobiphenyl (Sr)*	*96*			*30-150 %*		"	"	"	"	"	
10386-84-2	*4,4-DB-Octafluorobiphenyl (Sr) [2C]*	*93*			*30-150 %*		"	"	"	"	"	
2051-24-3	*Decachlorobiphenyl (Sr)*	*72*			*30-150 %*		"	"	"	"	"	
2051-24-3	*Decachlorobiphenyl (Sr) [2C]*	*87*			*30-150 %*		"	"	"	"	"	
General Chemistry Parameters												
	% Solids	81.7		%		1	SM2540 G Mod.	30-Mar-10	30-Mar-10	AB	1006686	

DPW Project Number: BI-RT-843
Appendix #3
Addendum #6

Sample Identification	Client Project #	Matrix	Collection Date/Time	Received
NSBB Comp 2 SB09819-52	[none]	Soil	29-Mar-10 13:57	29-Mar-10

CAS No.	Analyte(s)	Result	Flag	Units	*RDL	Dilution	Method Ref.	Prepared	Analyzed	Analyst	Batch	Cert.
Semivolatile Organic Compounds by GC												
Polychlorinated Biphenyls by SW846 8082 Prepared by method SW846 3540C												
12674-11-2	Aroclor-1016	BRL		µg/kg dry	24.2	1	SW846 8082	29-Mar-10	30-Mar-10	IMR	1006650	X
11104-28-2	Aroclor-1221	BRL		µg/kg dry	24.2	1	"	"	"	"	"	X
11141-16-5	Aroclor-1232	BRL		µg/kg dry	24.2	1	"	"	"	"	"	X
53469-21-9	Aroclor-1242	BRL		µg/kg dry	24.2	1	"	"	"	"	"	X
12672-29-6	Aroclor-1248	BRL		µg/kg dry	24.2	1	"	"	"	"	"	X
11097-69-1	Aroclor-1254	349		µg/kg dry	24.2	1	"	"	"	"	"	X
11096-82-5	Aroclor-1260	81.8		µg/kg dry	24.2	1	"	"	"	"	"	X
37324-23-5	Aroclor-1262	BRL		µg/kg dry	24.2	1	"	"	"	"	"	X
11100-14-4	Aroclor-1268	BRL		µg/kg dry	24.2	1	"	"	"	"	"	X
Surrogate recoveries:												
10386-84-2	*4,4-DB-Octafluorobiphenyl (Sr)*	*88*			*30-150 %*		"	"	"	"	"	
10386-84-2	*4,4-DB-Octafluorobiphenyl (Sr) [2C]*	*95*			*30-150 %*		"	"	"	"	"	
2051-24-3	*Decachlorobiphenyl (Sr)*	*83*			*30-150 %*		"	"	"	"	"	
2051-24-3	*Decachlorobiphenyl (Sr) [2C]*	*81*			*30-150 %*		"	"	"	"	"	
General Chemistry Parameters												
	% Solids	76.8		%		1	SM2540 G Mod.	30-Mar-10	30-Mar-10	AB	1006686	

Sample Identification	Client Project #	Matrix	Collection Date/Time	Received
NSBB Comp 3 SB09819-53	[none]	Soil	29-Mar-10 14:05	29-Mar-10

CAS No.	Analyte(s)	Result	Flag	Units	*RDL	Dilution	Method Ref.	Prepared	Analyzed	Analyst	Batch	Cert.
Semivolatile Organic Compounds by GC												
Polychlorinated Biphenyls by SW846 8082 Prepared by method SW846 3540C												
12674-11-2	Aroclor-1016	BRL		µg/kg dry	24.6	1	SW846 8082	29-Mar-10	30-Mar-10	IMR	1006650	X
11104-28-2	Aroclor-1221	BRL		µg/kg dry	24.6	1	"	"	"	"	"	X
11141-16-5	Aroclor-1232	BRL		µg/kg dry	24.6	1	"	"	"	"	"	X
53469-21-9	Aroclor-1242	BRL		µg/kg dry	24.6	1	"	"	"	"	"	X
12672-29-6	Aroclor-1248	BRL		µg/kg dry	24.6	1	"	"	"	"	"	X
11097-69-1	Aroclor-1254	614		µg/kg dry	24.6	1	"	"	"	"	"	X
11096-82-5	Aroclor-1260	106		µg/kg dry	24.6	1	"	"	"	"	"	X
37324-23-5	Aroclor-1262	BRL		µg/kg dry	24.6	1	"	"	"	"	"	X
11100-14-4	Aroclor-1268	BRL		µg/kg dry	24.6	1	"	"	"	"	"	X
Surrogate recoveries:												
10386-84-2	*4,4-DB-Octafluorobiphenyl (Sr)*	*100*			*30-150 %*		"	"	"	"	"	
10386-84-2	*4,4-DB-Octafluorobiphenyl (Sr) [2C]*	*107*			*30-150 %*		"	"	"	"	"	
2051-24-3	*Decachlorobiphenyl (Sr)*	*76*			*30-150 %*		"	"	"	"	"	
2051-24-3	*Decachlorobiphenyl (Sr) [2C]*	*92*			*30-150 %*		"	"	"	"	"	
General Chemistry Parameters												
	% Solids	78.9		%		1	SM2540 G Mod.	30-Mar-10	30-Mar-10	AB	1006686	

DPW Project Number: BI-RT-843
Appendix #3
Addendum #6

Semivolatile Organic Compounds by GC - Quality Control

Analyte(s)	Result	Flag	Units	*RDL	Spike Level	Source Result	%REC	%REC Limits	RPD	RPD Limit
Batch 1006643 - SW846 3540C										
Blank (1006643-BLK1)					Prepared: 29-Mar-10 Analyzed: 31-Mar-10					
Aroclor-1016	BRL		µg/kg wet	20.0						
Aroclor-1016 [2C]	BRL		µg/kg wet	20.0						
Aroclor-1221	BRL		µg/kg wet	20.0						
Aroclor-1221 [2C]	BRL		µg/kg wet	20.0						
Aroclor-1232	BRL		µg/kg wet	20.0						
Aroclor-1232 [2C]	BRL		µg/kg wet	20.0						
Aroclor-1242	BRL		µg/kg wet	20.0						
Aroclor-1242 [2C]	BRL		µg/kg wet	20.0						
Aroclor-1248	BRL		µg/kg wet	20.0						
Aroclor-1248 [2C]	BRL		µg/kg wet	20.0						
Aroclor-1254	BRL		µg/kg wet	20.0						
Aroclor-1254 [2C]	BRL		µg/kg wet	20.0						
Aroclor-1260	BRL		µg/kg wet	20.0						
Aroclor-1260 [2C]	BRL		µg/kg wet	20.0						
Aroclor-1262	BRL		µg/kg wet	20.0						
Aroclor-1262 [2C]	BRL		µg/kg wet	20.0						
Aroclor-1268	BRL		µg/kg wet	20.0						
Aroclor-1268 [2C]	BRL		µg/kg wet	20.0						
Surrogate: 4,4-DB-Octafluorobiphenyl (Sr)	*18.0*		µg/kg wet		*20.0*		*90*	*30-150*		
Surrogate: 4,4-DB-Octafluorobiphenyl (Sr) [2C]	*19.0*		µg/kg wet		*20.0*		*95*	*30-150*		
Surrogate: Decachlorobiphenyl (Sr)	*19.0*		µg/kg wet		*20.0*		*95*	*30-150*		
Surrogate: Decachlorobiphenyl (Sr) [2C]	*18.0*		µg/kg wet		*20.0*		*90*	*30-150*		
LCS (1006643-BS1)					Prepared: 29-Mar-10 Analyzed: 31-Mar-10					
Aroclor-1016	89.9		µg/kg wet	20.0	125		72	50-140		
Aroclor-1016 [2C]	87.4		µg/kg wet	20.0	125		70	50-140		
Aroclor-1260	89.7		µg/kg wet	20.0	125		72	50-140		
Aroclor-1260 [2C]	111		µg/kg wet	20.0	125		89	50-140		
Surrogate: 4,4-DB-Octafluorobiphenyl (Sr)	*19.0*		µg/kg wet		*20.0*		*95*	*30-150*		
Surrogate: 4,4-DB-Octafluorobiphenyl (Sr) [2C]	*19.0*		µg/kg wet		*20.0*		*95*	*30-150*		
Surrogate: Decachlorobiphenyl (Sr)	*20.0*		µg/kg wet		*20.0*		*100*	*30-150*		
Surrogate: Decachlorobiphenyl (Sr) [2C]	*24.0*		µg/kg wet		*20.0*		*120*	*30-150*		
LCS (1006643-BS2)					Prepared: 29-Mar-10 Analyzed: 31-Mar-10					
Aroclor-1248	261		µg/kg wet	20.0	250		104	50-140		
Aroclor-1248 [2C]	270		µg/kg wet	20.0	250		108	50-140		
Surrogate: 4,4-DB-Octafluorobiphenyl (Sr)	*19.0*		µg/kg wet		*20.0*		*95*	*30-150*		
Surrogate: 4,4-DB-Octafluorobiphenyl (Sr) [2C]	*19.0*		µg/kg wet		*20.0*		*95*	*30-150*		
Surrogate: Decachlorobiphenyl (Sr)	*21.0*		µg/kg wet		*20.0*		*105*	*30-150*		
Surrogate: Decachlorobiphenyl (Sr) [2C]	*21.0*		µg/kg wet		*20.0*		*105*	*30-150*		
LCS Dup (1006643-BSD1)					Prepared: 29-Mar-10 Analyzed: 31-Mar-10					
Aroclor-1016	99.6		µg/kg wet	20.0	125		80	50-140	10	30
Aroclor-1016 [2C]	111		µg/kg wet	20.0	125		88	50-140	23	30
Aroclor-1260	98.1		µg/kg wet	20.0	125		78	50-140	9	30
Aroclor-1260 [2C]	122		µg/kg wet	20.0	125		98	50-140	9	30
Surrogate: 4,4-DB-Octafluorobiphenyl (Sr)	*21.0*		µg/kg wet		*20.0*		*105*	*30-150*		
Surrogate: 4,4-DB-Octafluorobiphenyl (Sr) [2C]	*21.0*		µg/kg wet		*20.0*		*105*	*30-150*		
Surrogate: Decachlorobiphenyl (Sr)	*22.0*		µg/kg wet		*20.0*		*110*	*30-150*		
Surrogate: Decachlorobiphenyl (Sr) [2C]	*21.0*		µg/kg wet		*20.0*		*105*	*30-150*		

Semivolatile Organic Compounds by GC - Quality Control

Analyte(s)	Result	Flag	Units	*RDL	Spike Level	Source Result	%REC	%REC Limits	RPD	RPD Limit
Batch 1006643 - SW846 3540C										
LCS Dup (1006643-BSD2)					Prepared: 29-Mar-10 Analyzed: 31-Mar-10					
Aroclor-1248	265		µg/kg wet	20.0	250		106	50-140	2	30
Aroclor-1248 [2C]	278		µg/kg wet	20.0	250		111	50-140	3	30
Surrogate: 4,4-DB-Octafluorobiphenyl (Sr)	*20.0*		µg/kg wet		*20.0*		*100*	*30-150*		
Surrogate: 4,4-DB-Octafluorobiphenyl (Sr) [2C]	*20.0*		µg/kg wet		*20.0*		*100*	*30-150*		
Surrogate: Decachlorobiphenyl (Sr)	*21.0*		µg/kg wet		*20.0*		*105*	*30-150*		
Surrogate: Decachlorobiphenyl (Sr) [2C]	*21.0*		µg/kg wet		*20.0*		*105*	*30-150*		
Batch 1006648 - SW846 3540C										
Blank (1006648-BLK1)					Prepared: 29-Mar-10 Analyzed: 30-Mar-10					
Aroclor-1016	BRL		µg/kg	20.0						
Aroclor-1016 [2C]	BRL		µg/kg	20.0						
Aroclor-1221	BRL		µg/kg	20.0						
Aroclor-1221 [2C]	BRL		µg/kg	20.0						
Aroclor-1232	BRL		µg/kg	20.0						
Aroclor-1232 [2C]	BRL		µg/kg	20.0						
Aroclor-1242	BRL		µg/kg	20.0						
Aroclor-1242 [2C]	BRL		µg/kg	20.0						
Aroclor-1248	BRL		µg/kg	20.0						
Aroclor-1248 [2C]	BRL		µg/kg	20.0						
Aroclor-1254	BRL		µg/kg	20.0						
Aroclor-1254 [2C]	BRL		µg/kg	20.0						
Aroclor-1260	BRL		µg/kg	20.0						
Aroclor-1260 [2C]	BRL		µg/kg	20.0						
Aroclor-1262	BRL		µg/kg	20.0						
Aroclor-1262 [2C]	BRL		µg/kg	20.0						
Aroclor-1268	BRL		µg/kg	20.0						
Aroclor-1268 [2C]	BRL		µg/kg	20.0						
Surrogate: 4,4-DB-Octafluorobiphenyl (Sr)	*21.8*		µg/kg		*20.0*		*109*	*30-150*		
Surrogate: 4,4-DB-Octafluorobiphenyl (Sr) [2C]	*22.1*		µg/kg		*20.0*		*111*	*30-150*		
Surrogate: Decachlorobiphenyl (Sr)	*17.3*		µg/kg		*20.0*		*86*	*30-150*		
Surrogate: Decachlorobiphenyl (Sr) [2C]	*22.8*		µg/kg		*20.0*		*114*	*30-150*		
LCS (1006648-BS1)					Prepared: 29-Mar-10 Analyzed: 30-Mar-10					
Aroclor-1016	83.0		µg/kg	20.0	125		66	50-140		
Aroclor-1016 [2C]	84.0		µg/kg	20.0	125		67	50-140		
Aroclor-1260	80.2		µg/kg	20.0	125		64	50-140		
Aroclor-1260 [2C]	85.4		µg/kg	20.0	125		68	50-140		
Surrogate: 4,4-DB-Octafluorobiphenyl (Sr)	*22.1*		µg/kg		*20.0*		*111*	*30-150*		
Surrogate: 4,4-DB-Octafluorobiphenyl (Sr) [2C]	*22.4*		µg/kg		*20.0*		*112*	*30-150*		
Surrogate: Decachlorobiphenyl (Sr)	*17.7*		µg/kg		*20.0*		*88*	*30-150*		
Surrogate: Decachlorobiphenyl (Sr) [2C]	*24.1*		µg/kg		*20.0*		*121*	*30-150*		
LCS Dup (1006648-BSD1)					Prepared: 29-Mar-10 Analyzed: 30-Mar-10					
Aroclor-1016	83.9		µg/kg	20.0	125		67	50-140	1	30
Aroclor-1016 [2C]	87.9		µg/kg	20.0	125		70	50-140	5	30
Aroclor-1260	82.0		µg/kg	20.0	125		66	50-140	2	30
Aroclor-1260 [2C]	82.8		µg/kg	20.0	125		66	50-140	3	30
Surrogate: 4,4-DB-Octafluorobiphenyl (Sr)	*22.0*		µg/kg		*20.0*		*110*	*30-150*		
Surrogate: 4,4-DB-Octafluorobiphenyl (Sr) [2C]	*22.8*		µg/kg		*20.0*		*114*	*30-150*		
Surrogate: Decachlorobiphenyl (Sr)	*18.4*		µg/kg		*20.0*		*92*	*30-150*		

Semivolatile Organic Compounds by GC - Quality Control

Analyte(s)	Result	Flag	Units	*RDL	Spike Level	Source Result	%REC	%REC Limits	RPD	RPD Limit
Batch 1006648 - SW846 3540C										
LCS Dup (1006648-BSD1)					Prepared: 29-Mar-10 Analyzed: 30-Mar-10					
Surrogate: Decachlorobiphenyl (Sr) [2C]	*23.7*		µg/kg		*20.0*		*119*	*30-150*		
Duplicate (1006648-DUP1)			**Source: SB09819-03**		Prepared: 29-Mar-10 Analyzed: 30-Mar-10					
Aroclor-1016	BRL		µg/kg	58.6		BRL				40
Aroclor-1016 [2C]	BRL		µg/kg	58.6		BRL				40
Aroclor-1221	BRL		µg/kg	58.6		BRL				40
Aroclor-1221 [2C]	BRL		µg/kg	58.6		BRL				40
Aroclor-1232	BRL		µg/kg	58.6		BRL				40
Aroclor-1232 [2C]	BRL		µg/kg	58.6		BRL				40
Aroclor-1242	BRL		µg/kg	58.6		BRL				40
Aroclor-1242 [2C]	BRL		µg/kg	58.6		BRL				40
Aroclor-1248	BRL		µg/kg	58.6		BRL				40
Aroclor-1248 [2C]	BRL		µg/kg	58.6		BRL				40
Aroclor-1254	47.2	J	µg/kg	58.6		56.0			17	40
Aroclor-1254 [2C]	45.4	J	µg/kg	58.6		57.2			23	40
Aroclor-1260	BRL		µg/kg	58.6		BRL				40
Aroclor-1260 [2C]	BRL		µg/kg	58.6		BRL				40
Aroclor-1262	BRL		µg/kg	58.6		BRL				40
Aroclor-1262 [2C]	BRL		µg/kg	58.6		BRL				40
Aroclor-1268	BRL		µg/kg	58.6		BRL				40
Aroclor-1268 [2C]	BRL		µg/kg	58.6		BRL				40
Surrogate: 4,4-DB-Octafluorobiphenyl (Sr)	*57.5*		µg/kg		*58.6*		*98*	*30-150*		
Surrogate: 4,4-DB-Octafluorobiphenyl (Sr) [2C]	*67.4*		µg/kg		*58.6*		*115*	*30-150*		
Surrogate: Decachlorobiphenyl (Sr)	*49.0*		µg/kg		*58.6*		*84*	*30-150*		
Surrogate: Decachlorobiphenyl (Sr) [2C]	*57.2*		µg/kg		*58.6*		*98*	*30-150*		
Batch 1006649 - SW846 3540C										
Blank (1006649-BLK1)					Prepared: 29-Mar-10 Analyzed: 30-Mar-10					
Aroclor-1016	BRL		µg/kg wet	20.0						
Aroclor-1016 [2C]	BRL		µg/kg wet	20.0						
Aroclor-1221	BRL		µg/kg wet	20.0						
Aroclor-1221 [2C]	BRL		µg/kg wet	20.0						
Aroclor-1232	BRL		µg/kg wet	20.0						
Aroclor-1232 [2C]	BRL		µg/kg wet	20.0						
Aroclor-1242	BRL		µg/kg wet	20.0						
Aroclor-1242 [2C]	BRL		µg/kg wet	20.0						
Aroclor-1248	BRL		µg/kg wet	20.0						
Aroclor-1248 [2C]	BRL		µg/kg wet	20.0						
Aroclor-1254	BRL		µg/kg wet	20.0						
Aroclor-1254 [2C]	BRL		µg/kg wet	20.0						
Aroclor-1260	BRL		µg/kg wet	20.0						
Aroclor-1260 [2C]	BRL		µg/kg wet	20.0						
Aroclor-1262	BRL		µg/kg wet	20.0						
Aroclor-1262 [2C]	BRL		µg/kg wet	20.0						
Aroclor-1268	BRL		µg/kg wet	20.0						
Aroclor-1268 [2C]	BRL		µg/kg wet	20.0						
Surrogate: 4,4-DB-Octafluorobiphenyl (Sr)	*20.3*		µg/kg wet		*20.0*		*102*	*30-150*		
Surrogate: 4,4-DB-Octafluorobiphenyl (Sr) [2C]	*19.9*		µg/kg wet		*20.0*		*100*	*30-150*		
Surrogate: Decachlorobiphenyl (Sr)	*21.5*		µg/kg wet		*20.0*		*108*	*30-150*		
Surrogate: Decachlorobiphenyl (Sr) [2C]	*20.0*		µg/kg wet		*20.0*		*100*	*30-150*		
LCS (1006649-BS1)					Prepared: 29-Mar-10 Analyzed: 30-Mar-10					

Semivolatile Organic Compounds by GC - Quality Control

Analyte(s)	Result	Flag	Units	*RDL	Spike Level	Source Result	%REC	%REC Limits	RPD	RPD Limit
Batch 1006649 - SW846 3540C										
LCS (1006649-BS1)					Prepared: 29-Mar-10 Analyzed: 30-Mar-10					
Aroclor-1016	83.9		µg/kg wet	20.0	125		67	50-140		
Aroclor-1016 [2C]	92.2		µg/kg wet	20.0	125		74	50-140		
Aroclor-1260	90.7		µg/kg wet	20.0	125		73	50-140		
Aroclor-1260 [2C]	86.2		µg/kg wet	20.0	125		69	50-140		
Surrogate: 4,4-DB-Octafluorobiphenyl (Sr)	*19.7*		µg/kg wet		*20.0*		*98*	*30-150*		
Surrogate: 4,4-DB-Octafluorobiphenyl (Sr) [2C]	*18.9*		µg/kg wet		*20.0*		*94*	*30-150*		
Surrogate: Decachlorobiphenyl (Sr)	*22.3*		µg/kg wet		*20.0*		*112*	*30-150*		
Surrogate: Decachlorobiphenyl (Sr) [2C]	*19.8*		µg/kg wet		*20.0*		*99*	*30-150*		
LCS Dup (1006649-BSD1)					Prepared: 29-Mar-10 Analyzed: 30-Mar-10					
Aroclor-1016	92.3		µg/kg wet	20.0	125		74	50-140	10	30
Aroclor-1016 [2C]	92.2		µg/kg wet	20.0	125		74	50-140	0	30
Aroclor-1260	100		µg/kg wet	20.0	125		80	50-140	10	30
Aroclor-1260 [2C]	92.9		µg/kg wet	20.0	125		74	50-140	7	30
Surrogate: 4,4-DB-Octafluorobiphenyl (Sr)	*20.1*		µg/kg wet		*20.0*		*101*	*30-150*		
Surrogate: 4,4-DB-Octafluorobiphenyl (Sr) [2C]	*19.4*		µg/kg wet		*20.0*		*97*	*30-150*		
Surrogate: Decachlorobiphenyl (Sr)	*23.1*		µg/kg wet		*20.0*		*116*	*30-150*		
Surrogate: Decachlorobiphenyl (Sr) [2C]	*20.5*		µg/kg wet		*20.0*		*103*	*30-150*		
Duplicate (1006649-DUP1)			**Source: SB09819-26**		Prepared: 29-Mar-10 Analyzed: 30-Mar-10					
Aroclor-1016	BRL		µg/kg dry	23.9		BRL				40
Aroclor-1016 [2C]	BRL		µg/kg dry	23.9		BRL				40
Aroclor-1221	BRL		µg/kg dry	23.9		BRL				40
Aroclor-1221 [2C]	BRL		µg/kg dry	23.9		BRL				40
Aroclor-1232	BRL		µg/kg dry	23.9		BRL				40
Aroclor-1232 [2C]	BRL		µg/kg dry	23.9		BRL				40
Aroclor-1242	BRL		µg/kg dry	23.9		BRL				40
Aroclor-1242 [2C]	BRL		µg/kg dry	23.9		BRL				40
Aroclor-1248	BRL		µg/kg dry	23.9		BRL				40
Aroclor-1248 [2C]	BRL		µg/kg dry	23.9		BRL				40
Aroclor-1254	57.8		µg/kg dry	23.9		63.9			10	40
Aroclor-1254 [2C]	58.7		µg/kg dry	23.9		63.3			8	40
Aroclor-1260	53.6		µg/kg dry	23.9		66.2			21	40
Aroclor-1260 [2C]	50.0		µg/kg dry	23.9		69.8			33	40
Aroclor-1262	BRL		µg/kg dry	23.9		BRL				40
Aroclor-1262 [2C]	BRL		µg/kg dry	23.9		BRL				40
Aroclor-1268	BRL		µg/kg dry	23.9		BRL				40
Aroclor-1268 [2C]	BRL		µg/kg dry	23.9		BRL				40
Surrogate: 4,4-DB-Octafluorobiphenyl (Sr)	*25.3*		µg/kg dry		*23.9*		*106*	*30-150*		
Surrogate: 4,4-DB-Octafluorobiphenyl (Sr) [2C]	*24.1*		µg/kg dry		*23.9*		*101*	*30-150*		
Surrogate: Decachlorobiphenyl (Sr)	*28.5*		µg/kg dry		*23.9*		*120*	*30-150*		
Surrogate: Decachlorobiphenyl (Sr) [2C]	*21.0*		µg/kg dry		*23.9*		*88*	*30-150*		
Matrix Spike (1006649-MS1)			**Source: SB09819-26**		Prepared: 29-Mar-10 Analyzed: 30-Mar-10					
Aroclor-1016	121		µg/kg dry	24.8	155	BRL	78	40-135		
Aroclor-1016 [2C]	130		µg/kg dry	24.8	155	BRL	84	40-135		
Aroclor-1260	191		µg/kg dry	24.8	155	66.2	81	40-135		
Aroclor-1260 [2C]	189		µg/kg dry	24.8	155	69.8	77	40-135		
Surrogate: 4,4-DB-Octafluorobiphenyl (Sr)	*27.8*		µg/kg dry		*24.8*		*112*	*30-150*		
Surrogate: 4,4-DB-Octafluorobiphenyl (Sr) [2C]	*26.3*		µg/kg dry		*24.8*		*106*	*30-150*		

Semivolatile Organic Compounds by GC - Quality Control

Analyte(s)	Result	Flag	Units	*RDL	Spike Level	Source Result	%REC	%REC Limits	RPD	RPD Limit
Batch 1006649 - SW846 3540C										
Matrix Spike (1006649-MS1)			**Source: SB09819-26**		Prepared: 29-Mar-10 Analyzed: 30-Mar-10					
Surrogate: Decachlorobiphenyl (Sr)	*29.5*		µg/kg dry		*24.8*		*119*	*30-150*		
Surrogate: Decachlorobiphenyl (Sr) [2C]	*25.4*		µg/kg dry		*24.8*		*103*	*30-150*		
Matrix Spike Dup (1006649-MSD1)			**Source: SB09819-26**		Prepared: 29-Mar-10 Analyzed: 30-Mar-10					
Aroclor-1016	104		µg/kg dry	23.7	148	BRL	70	40-135	11	30
Aroclor-1016 [2C]	110		µg/kg dry	23.7	148	BRL	74	40-135	12	30
Aroclor-1260	176		µg/kg dry	23.7	148	66.2	74	40-135	9	30
Aroclor-1260 [2C]	172		µg/kg dry	23.7	148	69.8	69	40-135	10	30
Surrogate: 4,4-DB-Octafluorobiphenyl (Sr)	*24.5*		µg/kg dry		*23.7*		*104*	*30-150*		
Surrogate: 4,4-DB-Octafluorobiphenyl (Sr) [2C]	*23.8*		µg/kg dry		*23.7*		*101*	*30-150*		
Surrogate: Decachlorobiphenyl (Sr)	*26.8*		µg/kg dry		*23.7*		*113*	*30-150*		
Surrogate: Decachlorobiphenyl (Sr) [2C]	*25.9*		µg/kg dry		*23.7*		*110*	*30-150*		
Batch 1006650 - SW846 3540C										
Blank (1006650-BLK1)					Prepared: 29-Mar-10 Analyzed: 30-Mar-10					
Aroclor-1016	BRL		µg/kg wet	20.0						
Aroclor-1016 [2C]	BRL		µg/kg wet	20.0						
Aroclor-1221	BRL		µg/kg wet	20.0						
Aroclor-1221 [2C]	BRL		µg/kg wet	20.0						
Aroclor-1232	BRL		µg/kg wet	20.0						
Aroclor-1232 [2C]	BRL		µg/kg wet	20.0						
Aroclor-1242	BRL		µg/kg wet	20.0						
Aroclor-1242 [2C]	BRL		µg/kg wet	20.0						
Aroclor-1248	BRL		µg/kg wet	20.0						
Aroclor-1248 [2C]	BRL		µg/kg wet	20.0						
Aroclor-1254	BRL		µg/kg wet	20.0						
Aroclor-1254 [2C]	BRL		µg/kg wet	20.0						
Aroclor-1260	BRL		µg/kg wet	20.0						
Aroclor-1260 [2C]	BRL		µg/kg wet	20.0						
Aroclor-1262	BRL		µg/kg wet	20.0						
Aroclor-1262 [2C]	BRL		µg/kg wet	20.0						
Aroclor-1268	BRL		µg/kg wet	20.0						
Aroclor-1268 [2C]	BRL		µg/kg wet	20.0						
Surrogate: 4,4-DB-Octafluorobiphenyl (Sr)	*19.2*		µg/kg wet		*20.0*		*96*	*30-150*		
Surrogate: 4,4-DB-Octafluorobiphenyl (Sr) [2C]	*20.2*		µg/kg wet		*20.0*		*101*	*30-150*		
Surrogate: Decachlorobiphenyl (Sr)	*17.9*		µg/kg wet		*20.0*		*90*	*30-150*		
Surrogate: Decachlorobiphenyl (Sr) [2C]	*24.5*		µg/kg wet		*20.0*		*123*	*30-150*		
LCS (1006650-BS1)					Prepared: 29-Mar-10 Analyzed: 30-Mar-10					
Aroclor-1016	84.0		µg/kg wet	20.0	125		67	50-140		
Aroclor-1016 [2C]	84.6		µg/kg wet	20.0	125		68	50-140		
Aroclor-1260	88.5		µg/kg wet	20.0	125		71	50-140		
Aroclor-1260 [2C]	85.5		µg/kg wet	20.0	125		68	50-140		
Surrogate: 4,4-DB-Octafluorobiphenyl (Sr)	*19.3*		µg/kg wet		*20.0*		*96*	*30-150*		
Surrogate: 4,4-DB-Octafluorobiphenyl (Sr) [2C]	*19.8*		µg/kg wet		*20.0*		*99*	*30-150*		
Surrogate: Decachlorobiphenyl (Sr)	*18.8*		µg/kg wet		*20.0*		*94*	*30-150*		
Surrogate: Decachlorobiphenyl (Sr) [2C]	*22.7*		µg/kg wet		*20.0*		*114*	*30-150*		
LCS Dup (1006650-BSD1)					Prepared: 29-Mar-10 Analyzed: 30-Mar-10					
Aroclor-1016	83.7		µg/kg wet	20.0	125		67	50-140	0.4	30
Aroclor-1016 [2C]	85.0		µg/kg wet	20.0	125		68	50-140	0.5	30
Aroclor-1260	91.0		µg/kg wet	20.0	125		73	50-140	3	30

Semivolatile Organic Compounds by GC - Quality Control

Analyte(s)	Result	Flag	Units	*RDL	Spike Level	Source Result	%REC	%REC Limits	RPD	RPD Limit
Batch 1006650 - SW846 3540C										
LCS Dup (1006650-BSD1)					Prepared: 29-Mar-10 Analyzed: 30-Mar-10					
Aroclor-1260 [2C]	88.2		µg/kg wet	20.0	125		71	50-140	3	30
Surrogate: 4,4-DB-Octafluorobiphenyl (Sr)	*19.7*		µg/kg wet		*20.0*		*98*	*30-150*		
Surrogate: 4,4-DB-Octafluorobiphenyl (Sr) [2C]	*20.2*		µg/kg wet		*20.0*		*101*	*30-150*		
Surrogate: Decachlorobiphenyl (Sr)	*17.4*		µg/kg wet		*20.0*		*87*	*30-150*		
Surrogate: Decachlorobiphenyl (Sr) [2C]	*23.3*		µg/kg wet		*20.0*		*117*	*30-150*		
Duplicate (1006650-DUP1)			**Source: SB09819-49**		Prepared: 29-Mar-10 Analyzed: 30-Mar-10					
Aroclor-1016	BRL		µg/kg dry	23.2		BRL				40
Aroclor-1016 [2C]	BRL		µg/kg dry	23.2		BRL				40
Aroclor-1221	BRL		µg/kg dry	23.2		BRL				40
Aroclor-1221 [2C]	BRL		µg/kg dry	23.2		BRL				40
Aroclor-1232	BRL		µg/kg dry	23.2		BRL				40
Aroclor-1232 [2C]	BRL		µg/kg dry	23.2		BRL				40
Aroclor-1242	BRL		µg/kg dry	23.2		BRL				40
Aroclor-1242 [2C]	BRL		µg/kg dry	23.2		BRL				40
Aroclor-1248	BRL		µg/kg dry	23.2		BRL				40
Aroclor-1248 [2C]	BRL		µg/kg dry	23.2		BRL				40
Aroclor-1254	532		µg/kg dry	23.2		655			21	40
Aroclor-1254 [2C]	528		µg/kg dry	23.2		631			18	40
Aroclor-1260	736		µg/kg dry	23.2		809			10	40
Aroclor-1260 [2C]	692		µg/kg dry	23.2		715			3	40
Aroclor-1262	BRL		µg/kg dry	23.2		BRL				40
Aroclor-1262 [2C]	BRL		µg/kg dry	23.2		BRL				40
Aroclor-1268	BRL		µg/kg dry	23.2		BRL				40
Aroclor-1268 [2C]	BRL		µg/kg dry	23.2		BRL				40
Surrogate: 4,4-DB-Octafluorobiphenyl (Sr)	*22.6*		µg/kg dry		*23.2*		*97*	*30-150*		
Surrogate: 4,4-DB-Octafluorobiphenyl (Sr) [2C]	*23.1*		µg/kg dry		*23.2*		*99*	*30-150*		
Surrogate: Decachlorobiphenyl (Sr)	*24.6*		µg/kg dry		*23.2*		*106*	*30-150*		
Surrogate: Decachlorobiphenyl (Sr) [2C]	*29.6*		µg/kg dry		*23.2*		*128*	*30-150*		
Matrix Spike (1006650-MS1)			**Source: SB09819-49**		Prepared: 29-Mar-10 Analyzed: 30-Mar-10					
Aroclor-1016	106		µg/kg dry	24.2	151	BRL	70	40-135		
Aroclor-1016 [2C]	123		µg/kg dry	24.2	151	BRL	81	40-135		
Aroclor-1260	872		µg/kg dry	24.2	151	809	42	40-135		
Aroclor-1260 [2C]	808		µg/kg dry	24.2	151	715	61	40-135		
Surrogate: 4,4-DB-Octafluorobiphenyl (Sr)	*24.0*		µg/kg dry		*24.2*		*99*	*30-150*		
Surrogate: 4,4-DB-Octafluorobiphenyl (Sr) [2C]	*25.7*		µg/kg dry		*24.2*		*106*	*30-150*		
Surrogate: Decachlorobiphenyl (Sr)	*26.7*		µg/kg dry		*24.2*		*110*	*30-150*		
Surrogate: Decachlorobiphenyl (Sr) [2C]	*29.9*		µg/kg dry		*24.2*		*124*	*30-150*		
Matrix Spike Dup (1006650-MSD1)			**Source: SB09819-49**		Prepared: 29-Mar-10 Analyzed: 30-Mar-10					
Aroclor-1016	99.6		µg/kg dry	24.4	153	BRL	65	40-135	7	30
Aroclor-1016 [2C]	122		µg/kg dry	24.4	153	BRL	80	40-135	2	30
Aroclor-1260	892		µg/kg dry	24.4	153	809	54	40-135	26	30
Aroclor-1260 [2C]	795		µg/kg dry	24.4	153	715	52	40-135	16	30
Surrogate: 4,4-DB-Octafluorobiphenyl (Sr)	*22.0*		µg/kg dry		*24.4*		*90*	*30-150*		
Surrogate: 4,4-DB-Octafluorobiphenyl (Sr) [2C]	*22.8*		µg/kg dry		*24.4*		*94*	*30-150*		
Surrogate: Decachlorobiphenyl (Sr)	*23.8*		µg/kg dry		*24.4*		*98*	*30-150*		
Surrogate: Decachlorobiphenyl (Sr) [2C]	*26.2*		µg/kg dry		*24.4*		*108*	*30-150*		
Batch 1006667 - SW846 3510C										

Semivolatile Organic Compounds by GC - Quality Control

Analyte(s)	Result	Flag	Units	*RDL	Spike Level	Source Result	%REC	%REC Limits	RPD	RPD Limit
Batch 1006667 - SW846 3510C										
Blank (1006667-BLK1)					Prepared & Analyzed: 30-Mar-10					
Aroclor-1016	BRL		µg/l	0.200						
Aroclor-1016 [2C]	BRL		µg/l	0.200						
Aroclor-1221	BRL		µg/l	0.200						
Aroclor-1221 [2C]	BRL		µg/l	0.200						
Aroclor-1232	BRL		µg/l	0.200						
Aroclor-1232 [2C]	BRL		µg/l	0.200						
Aroclor-1242	BRL		µg/l	0.200						
Aroclor-1242 [2C]	BRL		µg/l	0.200						
Aroclor-1248	BRL		µg/l	0.200						
Aroclor-1248 [2C]	BRL		µg/l	0.200						
Aroclor-1254	BRL		µg/l	0.200						
Aroclor-1254 [2C]	BRL		µg/l	0.200						
Aroclor-1260	BRL		µg/l	0.200						
Aroclor-1260 [2C]	BRL		µg/l	0.200						
Aroclor-1262	BRL		µg/l	0.200						
Aroclor-1262 [2C]	BRL		µg/l	0.200						
Aroclor-1268	BRL		µg/l	0.200						
Aroclor-1268 [2C]	BRL		µg/l	0.200						
Surrogate: 4,4-DB-Octafluorobiphenyl (Sr)	*0.174*		µg/l		*0.200*		*87*	*30-150*		
Surrogate: 4,4-DB-Octafluorobiphenyl (Sr) [2C]	*0.187*		µg/l		*0.200*		*94*	*30-150*		
Surrogate: Decachlorobiphenyl (Sr)	*0.191*		µg/l		*0.200*		*96*	*30-150*		
Surrogate: Decachlorobiphenyl (Sr) [2C]	*0.180*		µg/l		*0.200*		*90*	*30-150*		
LCS (1006667-BS1)					Prepared & Analyzed: 30-Mar-10					
Aroclor-1016	2.20		µg/l	0.200	2.50		88	50-140		
Aroclor-1016 [2C]	2.23		µg/l	0.200	2.50		89	50-140		
Aroclor-1260	2.36		µg/l	0.200	2.50		94	50-140		
Aroclor-1260 [2C]	1.87		µg/l	0.200	2.50		75	50-140		
Surrogate: 4,4-DB-Octafluorobiphenyl (Sr)	*0.150*		µg/l		*0.200*		*75*	*30-150*		
Surrogate: 4,4-DB-Octafluorobiphenyl (Sr) [2C]	*0.191*		µg/l		*0.200*		*96*	*30-150*		
Surrogate: Decachlorobiphenyl (Sr)	*0.188*		µg/l		*0.200*		*94*	*30-150*		
Surrogate: Decachlorobiphenyl (Sr) [2C]	*0.155*		µg/l		*0.200*		*78*	*30-150*		
LCS Dup (1006667-BSD1)					Prepared & Analyzed: 30-Mar-10					
Aroclor-1016	2.09		µg/l	0.200	2.50		84	50-140	5	30
Aroclor-1016 [2C]	2.16		µg/l	0.200	2.50		87	50-140	3	30
Aroclor-1260	2.15		µg/l	0.200	2.50		86	50-140	9	30
Aroclor-1260 [2C]	1.90		µg/l	0.200	2.50		76	50-140	2	30
Surrogate: 4,4-DB-Octafluorobiphenyl (Sr)	*0.160*		µg/l		*0.200*		*80*	*30-150*		
Surrogate: 4,4-DB-Octafluorobiphenyl (Sr) [2C]	*0.181*		µg/l		*0.200*		*90*	*30-150*		
Surrogate: Decachlorobiphenyl (Sr)	*0.183*		µg/l		*0.200*		*92*	*30-150*		
Surrogate: Decachlorobiphenyl (Sr) [2C]	*0.152*		µg/l		*0.200*		*76*	*30-150*		

General Chemistry Parameters - Quality Control

Analyte(s)	Result	Flag	Units	*RDL	Spike Level	Source Result	%REC	%REC Limits	RPD	RPD Limit
Batch 1006685 - General Preparation										
Duplicate (1006685-DUP1)			**Source: SB09819-26**		Prepared & Analyzed: 30-Mar-10					
% Solids	80.5		%			80.1			0.5	20
Batch 1006686 - General Preparation										
Duplicate (1006686-DUP1)			**Source: SB09819-49**		Prepared & Analyzed: 30-Mar-10					
% Solids	81.6		%			81.9			0.3	20

Notes and Definitions

E	The concentration indicated for this analyte is an estimated value. This value is considered an estimate (CLP E-flag).
BRL	Below Reporting Limit - Analyte NOT DETECTED at or above the reporting limit
dry	Sample results reported on a dry weight basis
NR	Not Reported
RPD	Relative Percent Difference
J	Detected but below the Reporting Limit; therefore, result is an estimated concentration (CLP J-Flag).

A plus sign (+) in the Method Reference column indicates the method is not accredited by NELAC.

Laboratory Control Sample (LCS): A known matrix spiked with compound(s) representative of the target analytes, which is used to document laboratory performance.

Matrix Duplicate: An intra-laboratory split sample which is used to document the precision of a method in a given sample matrix.

Matrix Spike: An aliquot of a sample spiked with a known concentration of target analyte(s). The spiking occurs prior to sample preparation and analysis. A matrix spike is used to document the bias of a method in a given sample matrix.

Method Blank: An analyte-free matrix to which all reagents are added in the same volumes or proportions as used in sample processing. The method blank should be carried through the complete sample preparation and analytical procedure. The method blank is used to document contamination resulting from the analytical process.

Method Detection Limit (MDL): The minimum concentration of a substance that can be measured and reported with 99% confidence that the analyte concentration is greater than zero and is determined from analysis of a sample in a given matrix type containing the analyte.

Reportable Detection Limit (RDL): The lowest concentration that can be reliably achieved within specified limits of precision and accuracy during routine laboratory operating conditions. For many analytes the RDL analyte concentration is selected as the lowest non-zero standard in the calibration curve. While the RDL is approximately 5 to 10 times the MDL, the RDL for each sample takes into account the sample volume/weight, extract/digestate volume, cleanup procedures and, if applicable, dry weight correction. Sample RDLs are highly matrix-dependent.

Surrogate: An organic compound which is similar to the target analyte(s) in chemical composition and behavior in the analytical process, but which is not normally found in environmental samples. These compounds are spiked into all blanks, standards, and samples prior to analysis. Percent recoveries are calculated for each surrogate.

Continuing Calibration Verification: The calibration relationship established during the initial calibration must be verified at periodic

Validated by:
Hanibal C. Tayeh, Ph.D.
Nicole Leja

Reasonable Confidence Protocols
Laboratory Analysis
QA/QC Certification Form

Laboratory Name: Spectrum Analytical, Inc.

Client: TRC - Windsor, CT

Project Location: Wilcox Technical High School - Meriden, CT

Project Number: [none]

Sampling Date(s):
3/28/2010 through 3/29/2010

Laboratory Sample ID(s):
SB09819-01 through SB09819-53

RCP Methods Used:
SW846 8082

1	For each analytical method referenced in this laboratory report package, were all specified QA/QC performance criteria followed, including the requirement to explain any criteria falling outside of acceptable guidelines, as specified in the CT DEP method-specific Reasonable Confidence Protocol documents?	✓ Yes No
1A	Were the method specified preservation and holding time requirements met?	✓ Yes No
1B	***VPH and EPH methods only***: Was the VPH or EPH method conducted without significant modifications (see Section 11.3 of respective RCP methods)? * ** These methods have not yet been approved for release by CT DEP*	Yes No ✓ N/A
2	Were all samples received by the laboratory in a condition consistent with that described on the associated chain-of-custody document(s)?	✓ Yes No
3	Were samples received at an appropriate temperature?	✓ Yes No
4	Were all QA/QC performance criteria specified in the Reasonable Confidence Protocol documents achieved?	✓ Yes No
5	a) Were reporting limits specified or referenced on the chain-of-custody? * b) Were these reporting limits met? ** Exceptions are defined by qualifiers*	Yes ✓ No Yes No
6	For each analytical method referenced in this laboratory report package, were results reported for all constituents identified in the method-specific analyte lists presented in the Reasonable Confidence Protocol documents?	✓ Yes No
7	Are project-specific matrix spikes and laboratory duplicates included in this data set?	✓ Yes No

Note: For all questions to which the response was "No" (with the exception of question #7), additional information must be provided in an attached narrative. If the answer to question #1, #1A, or #1B is "No", the data package does not meet the requirements for "Reasonable Confidence."

I, the undersigned, attest under the pains and penalties of perjury that, to the best of my knowledge and belief and based upon my personal inquiry of those responsible for obtaining the information contained in this analytical report, such information is accurate and complete.

Hanibal C. Tayeh, Ph.D.
President/Laboratory Director
Date: 3/31/2010

SB09819.52

SPECTRUM ANALYTICAL, INC.
Featuring
HANIBAL TECHNOLOGY

CHAIN OF CUSTODY RECORD

Page 1 of 6

Special Handling:
- ☐ Standard TAT - 7 to 10 business days
- ☒ Rush TAT - Date Needed: 3/31
- All TATs subject to laboratory approval.
- Min. 24-hour notification needed for rushes.
- Samples disposed of after 60 days unless otherwise instructed.

Report To: Malcolm Beeler - TRC
21 Griffin Road North
Windsor, CT 06095
Telephone #: 860-298-6223
Project Mgr.

Invoice To: Rebecca Cutler
CT Dept. of Pub. Works
165 Capital Ave. Rm275
Hartford, CT 06106
P.O. No.: RQN: DAS

Project No.:
Site Name: Wilcox Technical High School
Location: ~~Hamden~~ Meriden State: CT
Sampler(s): MAB

1=$Na_2S_2O_3$ 2=HCl 3=H_2SO_4 4=HNO_3 5=NaOH 6=Ascorbic Acid 7=CH_3OH
8= $NaHSO_4$ 9= 10= 11=

List preservative code below: 9

QA/QC Reporting Notes: (check as needed)

DW=Drinking Water GW=Groundwater WW=Wastewater
O=Oil SW= Surface Water SO=Soil SL=Sludge A=Air
X1= Brick X2= Concrete X3= Asphalt

G=Grab C=Composite

Lab Id:	Sample Id:	Date:	Time:	Type	Matrix	# of VOA Vials	# of Amber Glass	# of Clear Glass	# of Plastic		Analyses: PCB (8082/3540)							
09819-01	IBB-IF-BM9	3/28/10	1030	G	X2			1			X							
02	IBB-IE-BM10		1055		X2													
03	IBB-IE-BM11		1115		X1													
04	IBB-WC-BM7		1010		X2													
05	IBB-IE-BM8		1020		X2													
06	IBB-IF-BM12		1105		X2													
07	As Comp 1	3/29/10	1030	C	X3													
08	As Comp 2		1033	C	X3													
09	As Comp 3		1036	C	X3													
10	sand Comp 1		1040	C														

Relinquished by:	Received by:	Date:	Time:	Temp°C
Richard E. [illegible]	[illegible]	03/29/10	3:00	1.7

☐ EDD Format none
☐ E-mail to mbeeler@trcsolutions.com

☐ Ambient ☒ Iced ☐ Refrigerated ☐ Fridge temp ___ °C ☐ Freezer temp ___ °C

11 Almgren Drive • Agawam, MA 01001 • 413-789-9018 • FAX 413-789-4076 • www.spectrum-analytical.com

SB 09819 BM

SPECTRUM ANALYTICAL, INC.
Featuring
HANIBAL TECHNOLOGY

CHAIN OF CUSTODY RECORD

Page 2 of 6

Special Handling:
- ☐ Standard TAT - 7 to 10 business days
- ☐ Rush TAT - Date Needed: _____
- All TATs subject to laboratory approval.
- Min. 24-hour notification needed for rushes.
- Samples disposed of after 60 days unless otherwise instructed.

Report To: SES P

Telephone #:

Project Mgr.

Invoice To: 1

P.O. No.: RQN:

Project No.:

Site Name:

Location: State:

Sampler(s):

1=Na_2S2O_3 2=HCl 3=H_2SO_4 4=HNO_3 5=NaOH 6=Ascorbic Acid 7=CH_3OH
8= $NaHSO_4$ 9= ICE 10= 11=

List preservative code below: 9

QA/QC Reporting Notes: (check as needed)

DW=Drinking Water GW=Groundwater WW=Wastewater
O=Oil SW= Surface Water SO=Soil SL=Sludge A=Air
X1= Brick X2= Concrete X3= Asphalt

G=Grab C=Composite

Lab Id:	Sample Id:	Date:	Time:	Type	Matrix	# of VOA Vials	# of Amber Glass	# of Clear Glass	# of Plastic	Analyses: PCB (8082/3540)
09819-11	SWC-BB-BM1	3/28/10	1535	G	71			1		x
12	SWC-BB-BM2		1550							
13	SS-BB-BM4		1545							
14	SS-BB-BM3		1545							
15	NWC-BB-A11		1645		72					
16	NWC-BB-BM6		1650		X1					
17	NWC-BB-BM5		1640		X1					
18	SS-BC-BM9		1755		X2					
19	SS-BC-BM8		1745		X2					
20	SS-BC-BM7		1753		X1					

QA/QC Reporting Notes:
- ☐ Provide MA DEP MCP CAM Report
- ☐ Provide CT DPH RCP Report

QA/QC Reporting Level
☐ Standard ☐ No QC
☐ Other _____

State specific reporting standards: _____

Relinquished by:	Received by:	Date:	Time:	Temp°C
Richard L. Hall	[signature]	03/29/10	3:00	1.7

☐ EDD Format none
☐ E-mail to mbeeler@trcsolutions.com

☐ Ambient ☒ Iced ☐ Refrigerated ☐ Fridge temp ____ °C ☐ Freezer temp ____ °C

11 Almgren Drive • Agawam, MA 01001 • 413-789-9018 • FAX 413-789-4076 • www.spectrum-analytical.com

SB 09819: BN

SPECTRUM ANALYTICAL, INC.
Featuring
HANIBAL TECHNOLOGY

CHAIN OF CUSTODY RECORD

Page 3 of 6

Special Handling:
- ☐ Standard TAT - 7 to 10 business days
- ☐ Rush TAT - Date Needed: _____
- All TATs subject to laboratory approval.
- Min. 24-hour notification needed for rushes.
- Samples disposed of after 60 days unless otherwise instructed.

Report To: see Page 7

Telephone #:

Project Mgr.

Invoice To:

P.O. No.: RQN:

Project No.:

Site Name:

Location: State:

Sampler(s):

1=$Na_2S_2O_3$ 2=HCl 3=H_2SO_4 4=HNO_3 5=NaOH 6=Ascorbic Acid 7=CH_3OH
8= $NaHSO_4$ 9= ICE 10= 11=

List preservative code below: 9

QA/QC Reporting Notes: (check as needed)

DW=Drinking Water GW=Groundwater WW=Wastewater
O=Oil SW= Surface Water SO=Soil SL=Sludge A=Air
X1= Brick X2= Concrete X3= Asphalt

G=Grab C=Composite

Lab Id:	Sample Id:	Date:	Time:	Type	Matrix	# of VOA Vials	# of Amber Glass	# of Clear Glass	# of Plastic	PCB (8082)/3540
09819-21	SS-BA-BM21	3/28/10	1332	G	X2			1		x
22	SS-BC-BM22		1335	G	X2			1		
23	SS-AC-BM23		1338	G	X2			1		
24	SS-BC-57		1700	G	SO		1			
25	SS-BC-58		1705	G	SO		1			
26	SS-BC-59		1710	G	SO		1			
27	SEC-BA-AC	3/28/10	0815	G	X3			1		
28	SWC-BB-A comp	3/29/10	1310	C	X3			1		
	~~SWC-BB-MAB~~	~~3/29/10~~		~~C~~						
29	SS-BB-A comp	3/29/10	1315	C	X2			1		

Containers: # of VOA Vials, # of Amber Glass, # of Clear Glass, # of Plastic

Analyses: PCB (8082)/3540

☐ Provide MA DEP MCP CAM Report
☐ Provide CT DPH RCP Report

QA/QC Reporting Level
☐ Standard ☐ No QC
☐ Other _____

State specific reporting standards:

Relinquished by:	Received by:	Date:	Time:	Temp°C
Richard R. Mott	[signature]	03/29/10	3:00	1.7

☐ EDD Format _____
☐ E-mail to _____

☐ Ambient ☑ Iced ☐ Refrigerated ☐ Fridge temp ___ °C ☐ Freezer temp ___ °C

SB 09819 BL

SPECTRUM ANALYTICAL, INC.
Featuring
HANIBAL TECHNOLOGY

CHAIN OF CUSTODY RECORD

Page 4 of 6

Special Handling:
- ☐ Standard TAT - 7 to 10 business days
- ☐ Rush TAT - Date Needed: _____
- All TATs subject to laboratory approval.
- Min. 24-hour notification needed for rushes.
- Samples disposed of after 60 days unless otherwise instructed.

Report To: See
Telephone #:
Project Mgr.

Invoice To: Page 1
P.O. No.: RQN:

Project No.:
Site Name:
Location: State:
Sampler(s):

1=$Na_2S_2O_3$ 2=HCl 3=H_2SO_4 4=HNO_3 5=NaOH 6=Ascorbic Acid 7=CH_3OH
8= $NaHSO_4$ 9= ICE 10= 11=

DW=Drinking Water GW=Groundwater WW=Wastewater
O=Oil SW= Surface Water SO=Soil SL=Sludge A=Air
X1= X2= X3=

G=Grab C=Composite

List preservative code below: 9

QA/QC Reporting Notes: (check as needed)
- ☐ Provide MA DEP MCP CAM Report
- ☐ Provide CT DPH RCP Report
- QA/QC Reporting Level ☐ Standard ☐ No QC
- ☐ Other _____

State specific reporting standards: _____

Lab Id:	Sample Id:	Date:	Time:	Type	Matrix	# of VOA Vials	# of Amber Glass	# of Clear Glass	# of Plastic	PCB (8082/8346)							
09819-30	NWSBA Comp 1	3/29/10	1200	C	SO			1		4							
31	Comp 2		1205														
32	Comp 3		1212														
33	Comp 4		1220														
34	Comp 5		1225														
35	Comp 6		1228														
36	Comp 7		1235														
37	Comp 8		1240														
38	Comp 9		1244														
39	Comp 10		1250														

Relinquished by:	Received by:	Date:	Time:	Temp°C
Richard P. [illegible]	[illegible]	3/29/10	3:00	1.7

☐ EDD Format _____
☐ E-mail to _____

☐ Ambient ☐ Iced ☐ Refrigerated ☐ Fridge temp ___ °C ☐ Freezer temp ___ °C

SB09819 By

SPECTRUM ANALYTICAL, INC.
Featuring
HANIBAL TECHNOLOGY

CHAIN OF CUSTODY RECORD

Page 5 of 6

Special Handling:
- ☐ Standard TAT - 7 to 10 business days
- ☐ Rush TAT - Date Needed: _____
- All TATs subject to laboratory approval.
- Min. 24-hour notification needed for rushes.
- Samples disposed of after 60 days unless otherwise instructed.

Report To: See page 1

Telephone #:

Project Mgr.

Invoice To:

P.O. No.: RQN:

Project No.:

Site Name:

Location: State:

Sampler(s):

1=$Na_2S_2O_3$ 2=HCl 3=H_2SO_4 4=HNO_3 5=NaOH 6=Ascorbic Acid 7=CH_3OH
8= $NaHSO_4$ 9= ICE 10= 11=

List preservative code below: 9

DW=Drinking Water GW=Groundwater WW=Wastewater
O=Oil SW= Surface Water SO=Soil SL=Sludge A=Air
X1= Brick X2= Concrete X3= Asphalt

G=Grab C=Composite

QA/QC Reporting Notes: (check as needed)
- ☐ Provide MA DEP MCP CAM Report
- ☐ Provide CT DPH RCP Report

QA/QC Reporting Level
☐ Standard ☐ No QC
☐ Other _____

State specific reporting standards: _____

Lab Id:	Sample Id:	Date:	Time:	Type	Matrix	# of VOA Vials	# of Amber Glass	# of Clear Glass	# of Plastic		PCB (aroclor only)
09819-40	NWSBA Comp11	3/29/10	1255	SO	C			1			X
41	NWSBA Comp12	3/29/10	1300	SO	C			1			X
	~~SWC-BB-A Comp~~							1			
MAS	~~SS-BB-A Com~~							1			
42	FB032810	3/28/10	1700	GW	G		1				X
43	NES BA Comp1	3/29/10	1320	SO	C			1			X
44	Comp2		1325					1			X
45	Comp3		1330					1			X
46	Comp4		1333					1			X
47	Comp5		1335					1			X

Relinquished by:	Received by:	Date:	Time:	Temp°C
Richard P. Hill	[signature]	03/29/10	3:00	1.7

☐ EDD Format _____
☐ E-mail to _____

☐ Ambient ☐ Iced ☐ Refrigerated ☐ Fridge temp ___ °C ☐ Freezer temp ___ °C

11 Almgren Drive • Agawam, MA 01001 • 413-789-9018 • FAX 413-789-4076 • www.spectrum-analytical.com

SB.09819 B7

SPECTRUM ANALYTICAL, INC.
Featuring
HANIBAL TECHNOLOGY

CHAIN OF CUSTODY RECORD

Page 6 of 6

Special Handling:
- ☐ Standard TAT - 7 to 10 business days
- ☐ Rush TAT - Date Needed: _____
- All TATs subject to laboratory approval.
- Min. 24-hour notification needed for rushes.
- Samples disposed of after 60 days unless otherwise instructed.

Report To: SEB Page 1

Telephone #:
Project Mgr.

Invoice To:

P.O. No.: RQN:

Project No.:
Site Name:
Location: State:
Sampler(s):

1=$Na_2S_2O_3$ 2=HCl 3=H_2SO_4 4=HNO_3 5=NaOH 6=Ascorbic Acid 7=CH_3OH
8= $NaHSO_4$ 9= ICE 10= 11=

List preservative code below: 9

QA/QC Reporting Notes: (check as needed)
- ☐ Provide MA DEP MCP CAM Report
- ☐ Provide CT DPH RCP Report

QA/QC Reporting Level
☐ Standard ☐ No QC
☐ Other _____

State specific reporting standards:

DW=Drinking Water GW=Groundwater WW=Wastewater
O=Oil SW= Surface Water SO=Soil SL=Sludge A=Air
X1= X2= X3=

G=Grab C=Composite

Lab Id:	Sample Id:	Date:	Time:	Type	Matrix	# of VOA Vials	# of Amber Glass	# of Clear Glass	# of Plastic	PCB (8082/3540)
09819-48	NESBA - Comp6	3/29/10	1340	G	SO			1		1
49	- Comp7		1343							
50	Comp8		1345							
51	NSBB - Comp1		1350							
52	Comp2		1357							
53	Comp3		1405							

Relinquished by:	Received by:	Date:	Time:	Temp°C
Richard P. Yoh	[signature]	03/29/10	3:00	1.7

☐ EDD Format _____
☐ E-mail to _____

☐ Ambient ☑ Iced ☐ Refrigerated ☐ Fridge temp ___ °C ☐ Freezer temp ___ °C

11 Almgren Drive • Agawam, MA 01001 • 413-789-9018 • FAX 413-789-4076 • www.spectrum-analytical.com

Report Date:
26-Apr-10 09:28

☑ Final Report
☐ Re-Issued Report
☐ Revised Report

SPECTRUM ANALYTICAL, INC.
Featuring
HANIBAL TECHNOLOGY

Laboratory Report

TRC
21 Griffin Road North
Windsor, CT 06095
Attn: Malcolm Beeler

Project: Wilcox Technical High School - Meriden, CT
Project #: [none]

Laboratory ID	Client Sample ID	Matrix	Date Sampled	Date Received
SB10735-01	NS-BB-S5	Soil	28-Mar-10 12:56	16-Apr-10 16:32
SB10735-02	NS-BB-S6	Soil	28-Mar-10 16:30	16-Apr-10 16:32
SB10735-03	NEC-BB-A6	Asphalt	28-Mar-10 16:05	16-Apr-10 16:32
SB10735-04	NS-BB-A7	Asphalt	28-Mar-10 13:00	16-Apr-10 16:32

I attest that the information contained within the report has been reviewed for accuracy and checked against the quality control requirements for each method. These results relate only to the sample(s) as received.
All applicable NELAC requirements have been met.

Massachusetts # M-MA138/MA1110
Connecticut # PH-0777
Florida # E87600/E87936
Maine # MA138
New Hampshire # 2538
New Jersey # MA011/MA012
New York # 11393/11840
Pennsylvania # 68-04426/68-02924
Rhode Island # 98
USDA # S-51435
Vermont # VT-11393

Authorized by:

Hanibal C. Tayeh, Ph.D.
President/Laboratory Director

Technical Reviewer's Initial:

Spectrum Analytical holds certification in the State of New York for the analytes as indicated with an X in the "Cert." column within this report. Please note that the State of New York does not offer certification for all analytes.
Please note that this report contains 9 pages of analytical data plus Chain of Custody document(s). When the Laboratory Report is indicated as revised, this report supersedes any previously dated reports for the laboratory ID(s) referenced above. Where this report identifies subcontracted analyses, copies of the subcontractor's test report are available upon request. This report may not be reproduced, except in full, without written approval from Spectrum Analytical, Inc.

Spectrum Analytical, Inc. is a NELAC accredited laboratory organization and meets NELAC testing standards. Use of the NELAC logo however does not insure that Spectrum is currently accredited for the specific method or analyte indicated. Please refer to our "Quality" web page at www.spectrum-analytical.com for a full listing of our current certifications and fields of accreditation. States in which Spectrum Analytical, Inc. holds NELAC certification are New York, New Hampshire, New Jersey and Florida. All analytical work for Volatile Organic and Air analysis are transferred to and conducted at our 830 Silver Street location (NY-11840, FL-E87936 and NJ-MA012).

Please contact the Laboratory or Technical Director at 800-789-9115 with any questions regarding the data contained in this laboratory report.

DPW Project Number: BI-RT-843
Appendix #3
Addendum #6

CASE NARRATIVE:

The sample temperature upon receipt by Spectrum Analytical courier was recorded as 3.0 degrees Celsius. The condition of these samples was further noted as received on ice. The samples were transported on ice to the laboratory facility and the temperature was recorded at 1.6 degrees Celsius upon receipt at the laboratory. Please refer to the Chain of Custody for details specific to sample receipt times.

An infrared thermometer with a tolerance of +/- 2.0 degrees Celsius was used immediately upon receipt of the samples.

If a Matrix Spike (MS), Matrix Spike Duplicate (MSD) or Duplicate (DUP) was not requested on the Chain of Custody, method criteria may have been fulfilled with a source sample not of this Sample Delivery Group.

Required site-specific Matrix Spike/Matrix Spike Duplicate (MS/MSD) must be requested by the client and sufficient sample must be submitted for the additional analyses. Samples submitted with insufficient volume/weight will not be analyzed for site specific MS/MSD, however a batch MS/MSD may be analyzed from a non-site specific sample.

CTDEP has published a list of analytical methods which provides a series of recommended protocols for the acquisition, analysis and reporting of analytical data in support of decisions being made utilizing the Reasonable Confidence Protocol (RCP). "Reasonable Confidence" can be established only for those methods published by the CTDEP in the RCP guidelines. The compounds and/or elements reported were specifically requested by the client on the Chain of Custody and in some cases may not include the full analyte list as defined in the method.

The CTDEP RCP requests that "all non-detects and all results below the reporting limit are reported as ND (Not Detected at the Specified Reporting Limit)". All non-detects and all results below the reporting limit are reported as "BRL" (Below the Reporting Limit) in this report.

If no reporting limits were specified or referenced on the chain-of-custody the laboratory's practical quantitation limits were applied.

Tetrachloro-m-xylene is recommended as a surrogate by the CTDEP RCP for the following SW846 Methods 8081, 8082 and 8151. Spectrum Analytical, Inc. uses Tetrachloro-m-xylene as the Internal Standard for these methods and Dibromooctaflourobiphenyl as the surrogate.

See below for any non-conformances and issues relating to quality control samples and/or sample analysis/matrix.

SW846 8082

Samples:

SB10735-01 *NS-BB-S5*

40 CFR part136 and SW846-8082 reference a holding time prior to extraction of one year for PCBs. Spectrum Analytical complies with CT RCP required hold times of 7-days for aqueous and 14-days for soil and/or product samples.

SB10735-02 *NS-BB-S6*

40 CFR part136 and SW846-8082 reference a holding time prior to extraction of one year for PCBs. Spectrum Analytical complies with CT RCP required hold times of 7-days for aqueous and 14-days for soil and/or product samples.

SB10735-03 *NEC-BB-A6*

40 CFR part136 and SW846-8082 reference a holding time prior to extraction of one year for PCBs. Spectrum Analytical complies with CT RCP required hold times of 7-days for aqueous and 14-days for soil and/or product samples.

SB10735-04 *NS-BB-A7*

40 CFR part136 and SW846-8082 reference a holding time prior to extraction of one year for PCBs. Spectrum Analytical complies with CT RCP required hold times of 7-days for aqueous and 14-days for soil and/or product samples.

Sample Identification	Client Project #	Matrix	Collection Date/Time	Received
NS-BB-S5 SB10735-01	[none]	Soil	28-Mar-10 12:56	16-Apr-10

CAS No.	Analyte(s)	Result	Flag	Units	*RDL	Dilution	Method Ref.	Prepared	Analyzed	Analyst	Batch	Cert.
Semivolatile Organic Compounds by GC												
Polychlorinated Biphenyls by SW846 8082 Prepared by method SW846 3540C			PCB									
12674-11-2	Aroclor-1016	BRL		µg/kg dry	25.8	1	SW846 8082	20-Apr-10	21-Apr-10	IMR	1008260	X
11104-28-2	Aroclor-1221	BRL		µg/kg dry	25.8	1	"	"	"	"	"	X
11141-16-5	Aroclor-1232	BRL		µg/kg dry	25.8	1	"	"	"	"	"	X
53469-21-9	Aroclor-1242	BRL		µg/kg dry	25.8	1	"	"	"	"	"	X
12672-29-6	Aroclor-1248	BRL		µg/kg dry	25.8	1	"	"	"	"	"	X
11097-69-1	Aroclor-1254	855		µg/kg dry	25.8	1	"	"	"	"	"	X
11096-82-5	Aroclor-1260	163		µg/kg dry	25.8	1	"	"	"	"	"	X
37324-23-5	Aroclor-1262	BRL		µg/kg dry	25.8	1	"	"	"	"	"	X
11100-14-4	Aroclor-1268	BRL		µg/kg dry	25.8	1	"	"	"	"	"	X
Surrogate recoveries:												
10386-84-2	*4,4-DB-Octafluorobiphenyl (Sr)*	*87*			*30-150 %*		"	"	"	"	"	
10386-84-2	*4,4-DB-Octafluorobiphenyl (Sr) [2C]*	*83*			*30-150 %*		"	"	"	"	"	
2051-24-3	*Decachlorobiphenyl (Sr)*	*96*			*30-150 %*		"	"	"	"	"	
2051-24-3	*Decachlorobiphenyl (Sr) [2C]*	*79*			*30-150 %*		"	"	"	"	"	
General Chemistry Parameters												
	% Solids	76.8		%		1	SM2540 G Mod.	20-Apr-10	20-Apr-10	VK	1008263	

Sample Identification	Client Project #	Matrix	Collection Date/Time	Received
NS-BB-S6 SB10735-02	[none]	Soil	28-Mar-10 16:30	16-Apr-10

CAS No.	Analyte(s)	Result	Flag	Units	*RDL	Dilution	Method Ref.	Prepared	Analyzed	Analyst	Batch	Cert.
Semivolatile Organic Compounds by GC												
Polychlorinated Biphenyls by SW846 8082 Prepared by method SW846 3540C			PCB									
12674-11-2	Aroclor-1016	BRL		µg/kg dry	23.0	1	SW846 8082	20-Apr-10	21-Apr-10	IMR	1008260	X
11104-28-2	Aroclor-1221	BRL		µg/kg dry	23.0	1	"	"	"	"	"	X
11141-16-5	Aroclor-1232	BRL		µg/kg dry	23.0	1	"	"	"	"	"	X
53469-21-9	Aroclor-1242	BRL		µg/kg dry	23.0	1	"	"	"	"	"	X
12672-29-6	Aroclor-1248	BRL		µg/kg dry	23.0	1	"	"	"	"	"	X
11097-69-1	Aroclor-1254	26.9		µg/kg dry	23.0	1	"	"	"	"	"	X
11096-82-5	Aroclor-1260	BRL		µg/kg dry	23.0	1	"	"	"	"	"	X
37324-23-5	Aroclor-1262	BRL		µg/kg dry	23.0	1	"	"	"	"	"	X
11100-14-4	Aroclor-1268	BRL		µg/kg dry	23.0	1	"	"	"	"	"	X
Surrogate recoveries:												
10386-84-2	*4,4-DB-Octafluorobiphenyl (Sr)*	*84*			*30-150 %*		"	"	"	"	"	
10386-84-2	*4,4-DB-Octafluorobiphenyl (Sr) [2C]*	*88*			*30-150 %*		"	"	"	"	"	
2051-24-3	*Decachlorobiphenyl (Sr)*	*83*			*30-150 %*		"	"	"	"	"	
2051-24-3	*Decachlorobiphenyl (Sr) [2C]*	*90*			*30-150 %*		"	"	"	"	"	
General Chemistry Parameters												
	% Solids	83.0		%		1	SM2540 G Mod.	20-Apr-10	20-Apr-10	VK	1008263	

DPW Project Number: BI-RT-843
Appendix #3
Addendum #6

Sample Identification	Client Project #	Matrix	Collection Date/Time	Received
NEC-BB-A6	[none]	Asphalt	28-Mar-10 16:05	16-Apr-10
SB10735-03				

CAS No.	Analyte(s)	Result	Flag	Units	*RDL	Dilution	Method Ref.	Prepared	Analyzed	Analyst	Batch	Cert.
Semivolatile Organic Compounds by GC												
Polychlorinated Biphenyls by SW846 8082 Prepared by method SW846 3540C			PCB									
12674-11-2	Aroclor-1016	BRL		µg/kg	50.6	1	SW846 8082	20-Apr-10	22-Apr-10	IMR	1008261	X
11104-28-2	Aroclor-1221	BRL		µg/kg	50.6	1	"	"	"	"	"	X
11141-16-5	Aroclor-1232	BRL		µg/kg	50.6	1	"	"	"	"	"	X
53469-21-9	Aroclor-1242	BRL		µg/kg	50.6	1	"	"	"	"	"	X
12672-29-6	Aroclor-1248	BRL		µg/kg	50.6	1	"	"	"	"	"	X
11097-69-1	Aroclor-1254	151		µg/kg	50.6	1	"	"	"	"	"	X
11096-82-5	Aroclor-1260	BRL		µg/kg	50.6	1	"	"	"	"	"	X
37324-23-5	Aroclor-1262	BRL		µg/kg	50.6	1	"	"	"	"	"	X
11100-14-4	Aroclor-1268	BRL		µg/kg	50.6	1	"	"	"	"	"	X
Surrogate recoveries:												
10386-84-2	*4,4-DB-Octafluorobiphenyl (Sr)*	*83*			*30-150 %*		"	"	"	"	"	
10386-84-2	*4,4-DB-Octafluorobiphenyl (Sr) [2C]*	*80*			*30-150 %*		"	"	"	"	"	
2051-24-3	*Decachlorobiphenyl (Sr)*	*85*			*30-150 %*		"	"	"	"	"	
2051-24-3	*Decachlorobiphenyl (Sr) [2C]*	*78*			*30-150 %*		"	"	"	"	"	

Sample Identification	Client Project #	Matrix	Collection Date/Time	Received
NS-BB-A7	[none]	Asphalt	28-Mar-10 13:00	16-Apr-10
SB10735-04				

CAS No.	Analyte(s)	Result	Flag	Units	*RDL	Dilution	Method Ref.	Prepared	Analyzed	Analyst	Batch	Cert.
Semivolatile Organic Compounds by GC												
Polychlorinated Biphenyls by SW846 8082 Prepared by method SW846 3540C			PCB									
12674-11-2	Aroclor-1016	BRL		µg/kg	52.8	1	SW846 8082	20-Apr-10	22-Apr-10	IMR	1008261	X
11104-28-2	Aroclor-1221	BRL		µg/kg	52.8	1	"	"	"	"	"	X
11141-16-5	Aroclor-1232	BRL		µg/kg	52.8	1	"	"	"	"	"	X
53469-21-9	Aroclor-1242	BRL		µg/kg	52.8	1	"	"	"	"	"	X
12672-29-6	Aroclor-1248	BRL		µg/kg	52.8	1	"	"	"	"	"	X
11097-69-1	Aroclor-1254	927		µg/kg	52.8	1	"	"	"	"	"	X
11096-82-5	Aroclor-1260	BRL		µg/kg	52.8	1	"	"	"	"	"	X
37324-23-5	Aroclor-1262	BRL		µg/kg	52.8	1	"	"	"	"	"	X
11100-14-4	Aroclor-1268	BRL		µg/kg	52.8	1	"	"	"	"	"	X
Surrogate recoveries:												
10386-84-2	*4,4-DB-Octafluorobiphenyl (Sr)*	*86*			*30-150 %*		"	"	"	"	"	
10386-84-2	*4,4-DB-Octafluorobiphenyl (Sr) [2C]*	*72*			*30-150 %*		"	"	"	"	"	
2051-24-3	*Decachlorobiphenyl (Sr)*	*92*			*30-150 %*		"	"	"	"	"	
2051-24-3	*Decachlorobiphenyl (Sr) [2C]*	*74*			*30-150 %*		"	"	"	"	"	

DPW Project Number: BI-RT-843
Appendix #3
Addendum #6

Semivolatile Organic Compounds by GC - Quality Control

Analyte(s)	Result	Flag	Units	*RDL	Spike Level	Source Result	%REC	%REC Limits	RPD	RPD Limit
Batch 1008260 - SW846 3540C										
Blank (1008260-BLK1)					Prepared: 20-Apr-10 Analyzed: 21-Apr-10					
Aroclor-1016	BRL		µg/kg wet	20.0						
Aroclor-1016 [2C]	BRL		µg/kg wet	20.0						
Aroclor-1221	BRL		µg/kg wet	20.0						
Aroclor-1221 [2C]	BRL		µg/kg wet	20.0						
Aroclor-1232	BRL		µg/kg wet	20.0						
Aroclor-1232 [2C]	BRL		µg/kg wet	20.0						
Aroclor-1242	BRL		µg/kg wet	20.0						
Aroclor-1242 [2C]	BRL		µg/kg wet	20.0						
Aroclor-1248	BRL		µg/kg wet	20.0						
Aroclor-1248 [2C]	BRL		µg/kg wet	20.0						
Aroclor-1254	BRL		µg/kg wet	20.0						
Aroclor-1254 [2C]	BRL		µg/kg wet	20.0						
Aroclor-1260	BRL		µg/kg wet	20.0						
Aroclor-1260 [2C]	BRL		µg/kg wet	20.0						
Aroclor-1262	BRL		µg/kg wet	20.0						
Aroclor-1262 [2C]	BRL		µg/kg wet	20.0						
Aroclor-1268	BRL		µg/kg wet	20.0						
Aroclor-1268 [2C]	BRL		µg/kg wet	20.0						
Surrogate: 4,4-DB-Octafluorobiphenyl (Sr)	*17.9*		µg/kg wet		*20.0*		*90*	*30-150*		
Surrogate: 4,4-DB-Octafluorobiphenyl (Sr) [2C]	*19.2*		µg/kg wet		*20.0*		*96*	*30-150*		
Surrogate: Decachlorobiphenyl (Sr)	*19.9*		µg/kg wet		*20.0*		*100*	*30-150*		
Surrogate: Decachlorobiphenyl (Sr) [2C]	*17.8*		µg/kg wet		*20.0*		*89*	*30-150*		
LCS (1008260-BS1)					Prepared: 20-Apr-10 Analyzed: 21-Apr-10					
Aroclor-1016	230		µg/kg wet	20.0	250		92	50-140		
Aroclor-1016 [2C]	223		µg/kg wet	20.0	250		89	50-140		
Aroclor-1260	220		µg/kg wet	20.0	250		88	50-140		
Aroclor-1260 [2C]	209		µg/kg wet	20.0	250		83	50-140		
Surrogate: 4,4-DB-Octafluorobiphenyl (Sr)	*18.3*		µg/kg wet		*20.0*		*92*	*30-150*		
Surrogate: 4,4-DB-Octafluorobiphenyl (Sr) [2C]	*19.3*		µg/kg wet		*20.0*		*96*	*30-150*		
Surrogate: Decachlorobiphenyl (Sr)	*20.2*		µg/kg wet		*20.0*		*101*	*30-150*		
Surrogate: Decachlorobiphenyl (Sr) [2C]	*19.1*		µg/kg wet		*20.0*		*96*	*30-150*		
LCS Dup (1008260-BSD1)					Prepared: 20-Apr-10 Analyzed: 21-Apr-10					
Aroclor-1016	210		µg/kg wet	20.0	250		84	50-140	9	30
Aroclor-1016 [2C]	214		µg/kg wet	20.0	250		86	50-140	4	30
Aroclor-1260	223		µg/kg wet	20.0	250		89	50-140	1	30
Aroclor-1260 [2C]	202		µg/kg wet	20.0	250		81	50-140	3	30
Surrogate: 4,4-DB-Octafluorobiphenyl (Sr)	*17.6*		µg/kg wet		*20.0*		*88*	*30-150*		
Surrogate: 4,4-DB-Octafluorobiphenyl (Sr) [2C]	*18.6*		µg/kg wet		*20.0*		*93*	*30-150*		
Surrogate: Decachlorobiphenyl (Sr)	*19.7*		µg/kg wet		*20.0*		*98*	*30-150*		
Surrogate: Decachlorobiphenyl (Sr) [2C]	*20.4*		µg/kg wet		*20.0*		*102*	*30-150*		
Batch 1008261 - SW846 3540C										
Blank (1008261-BLK1)					Prepared: 20-Apr-10 Analyzed: 22-Apr-10					
Aroclor-1016	BRL		µg/kg	66.7						
Aroclor-1016 [2C]	BRL		µg/kg	66.7						
Aroclor-1221	BRL		µg/kg	66.7						
Aroclor-1221 [2C]	BRL		µg/kg	66.7						
Aroclor-1232	BRL		µg/kg	66.7						
Aroclor-1232 [2C]	BRL		µg/kg	66.7						

Semivolatile Organic Compounds by GC - Quality Control

Analyte(s)	Result	Flag	Units	*RDL	Spike Level	Source Result	%REC	%REC Limits	RPD	RPD Limit
Batch 1008261 - SW846 3540C										
Blank (1008261-BLK1)					Prepared: 20-Apr-10 Analyzed: 22-Apr-10					
Aroclor-1242	BRL		µg/kg	66.7						
Aroclor-1242 [2C]	BRL		µg/kg	66.7						
Aroclor-1248	BRL		µg/kg	66.7						
Aroclor-1248 [2C]	BRL		µg/kg	66.7						
Aroclor-1254	BRL		µg/kg	66.7						
Aroclor-1254 [2C]	BRL		µg/kg	66.7						
Aroclor-1260	BRL		µg/kg	66.7						
Aroclor-1260 [2C]	BRL		µg/kg	66.7						
Aroclor-1262	BRL		µg/kg	66.7						
Aroclor-1262 [2C]	BRL		µg/kg	66.7						
Aroclor-1268	BRL		µg/kg	66.7						
Aroclor-1268 [2C]	BRL		µg/kg	66.7						
Surrogate: 4,4-DB-Octafluorobiphenyl (Sr)	*61.0*		µg/kg		*66.7*		*91*	*30-150*		
Surrogate: 4,4-DB-Octafluorobiphenyl (Sr) [2C]	*63.3*		µg/kg		*66.7*		*95*	*30-150*		
Surrogate: Decachlorobiphenyl (Sr)	*70.3*		µg/kg		*66.7*		*106*	*30-150*		
Surrogate: Decachlorobiphenyl (Sr) [2C]	*66.7*		µg/kg		*66.7*		*100*	*30-150*		
LCS (1008261-BS1)					Prepared: 20-Apr-10 Analyzed: 22-Apr-10					
Aroclor-1016	701		µg/kg	66.7	833		84	50-140		
Aroclor-1016 [2C]	685		µg/kg	66.7	833		82	50-140		
Aroclor-1260	745		µg/kg	66.7	833		89	50-140		
Aroclor-1260 [2C]	669		µg/kg	66.7	833		80	50-140		
Surrogate: 4,4-DB-Octafluorobiphenyl (Sr)	*57.0*		µg/kg		*66.7*		*85*	*30-150*		
Surrogate: 4,4-DB-Octafluorobiphenyl (Sr) [2C]	*59.3*		µg/kg		*66.7*		*89*	*30-150*		
Surrogate: Decachlorobiphenyl (Sr)	*68.3*		µg/kg		*66.7*		*103*	*30-150*		
Surrogate: Decachlorobiphenyl (Sr) [2C]	*64.3*		µg/kg		*66.7*		*97*	*30-150*		
LCS Dup (1008261-BSD1)					Prepared: 20-Apr-10 Analyzed: 22-Apr-10					
Aroclor-1016	713		µg/kg	66.7	833		86	50-140	2	30
Aroclor-1016 [2C]	711		µg/kg	66.7	833		85	50-140	4	30
Aroclor-1260	737		µg/kg	66.7	833		88	50-140	1	30
Aroclor-1260 [2C]	666		µg/kg	66.7	833		80	50-140	0.5	30
Surrogate: 4,4-DB-Octafluorobiphenyl (Sr)	*58.3*		µg/kg		*66.7*		*87*	*30-150*		
Surrogate: 4,4-DB-Octafluorobiphenyl (Sr) [2C]	*59.7*		µg/kg		*66.7*		*89*	*30-150*		
Surrogate: Decachlorobiphenyl (Sr)	*73.3*		µg/kg		*66.7*		*110*	*30-150*		
Surrogate: Decachlorobiphenyl (Sr) [2C]	*63.7*		µg/kg		*66.7*		*95*	*30-150*		
Duplicate (1008261-DUP1)			**Source: SB10735-03**		Prepared: 20-Apr-10 Analyzed: 22-Apr-10					
Aroclor-1016	BRL		µg/kg	51.9		BRL				40
Aroclor-1016 [2C]	BRL		µg/kg	51.9		BRL				40
Aroclor-1221	BRL		µg/kg	51.9		BRL				40
Aroclor-1221 [2C]	BRL		µg/kg	51.9		BRL				40
Aroclor-1232	BRL		µg/kg	51.9		BRL				40
Aroclor-1232 [2C]	BRL		µg/kg	51.9		BRL				40
Aroclor-1242	BRL		µg/kg	51.9		BRL				40
Aroclor-1242 [2C]	BRL		µg/kg	51.9		BRL				40
Aroclor-1248	BRL		µg/kg	51.9		BRL				40
Aroclor-1248 [2C]	BRL		µg/kg	51.9		BRL				40
Aroclor-1254	155		µg/kg	51.9		151			3	40
Aroclor-1254 [2C]	142		µg/kg	51.9		135			5	40
Aroclor-1260	43.1	J	µg/kg	51.9		38.5			11	40

Semivolatile Organic Compounds by GC - Quality Control

Analyte(s)	Result	Flag	Units	*RDL	Spike Level	Source Result	%REC	%REC Limits	RPD	RPD Limit
Batch 1008261 - SW846 3540C										
Duplicate (1008261-DUP1)			**Source: SB10735-03**		Prepared: 20-Apr-10 Analyzed: 22-Apr-10					
Aroclor-1260 [2C]	36.1	J	µg/kg	51.9		37.7			4	40
Aroclor-1262	BRL		µg/kg	51.9		BRL				40
Aroclor-1262 [2C]	BRL		µg/kg	51.9		BRL				40
Aroclor-1268	BRL		µg/kg	51.9		BRL				40
Aroclor-1268 [2C]	BRL		µg/kg	51.9		BRL				40
Surrogate: 4,4-DB-Octafluorobiphenyl (Sr)	*43.1*		µg/kg		*51.9*		*83*	*30-150*		
Surrogate: 4,4-DB-Octafluorobiphenyl (Sr) [2C]	*41.0*		µg/kg		*51.9*		*79*	*30-150*		
Surrogate: Decachlorobiphenyl (Sr)	*48.3*		µg/kg		*51.9*		*93*	*30-150*		
Surrogate: Decachlorobiphenyl (Sr) [2C]	*42.3*		µg/kg		*51.9*		*82*	*30-150*		

Notes and Definitions

PCB	40 CFR part136 and SW846-8082 reference a holding time prior to extraction of one year for PCBs. Spectrum Analytical complies with CT RCP required hold times of 7-days for aqueous and 14-days for soil and/or product samples.
BRL	Below Reporting Limit - Analyte NOT DETECTED at or above the reporting limit
dry	Sample results reported on a dry weight basis
NR	Not Reported
RPD	Relative Percent Difference
J	Detected but below the Reporting Limit; therefore, result is an estimated concentration (CLP J-Flag).

A plus sign (+) in the Method Reference column indicates the method is not accredited by NELAC.

Laboratory Control Sample (LCS): A known matrix spiked with compound(s) representative of the target analytes, which is used to document laboratory performance.

Matrix Duplicate: An intra-laboratory split sample which is used to document the precision of a method in a given sample matrix.

Matrix Spike: An aliquot of a sample spiked with a known concentration of target analyte(s). The spiking occurs prior to sample preparation and analysis. A matrix spike is used to document the bias of a method in a given sample matrix.

Method Blank: An analyte-free matrix to which all reagents are added in the same volumes or proportions as used in sample processing. The method blank should be carried through the complete sample preparation and analytical procedure. The method blank is used to document contamination resulting from the analytical process.

Method Detection Limit (MDL): The minimum concentration of a substance that can be measured and reported with 99% confidence that the analyte concentration is greater than zero and is determined from analysis of a sample in a given matrix type containing the analyte.

Reportable Detection Limit (RDL): The lowest concentration that can be reliably achieved within specified limits of precision and accuracy during routine laboratory operating conditions. For many analytes the RDL analyte concentration is selected as the lowest non-zero standard in the calibration curve. While the RDL is approximately 5 to 10 times the MDL, the RDL for each sample takes into account the sample volume/weight, extract/digestate volume, cleanup procedures and, if applicable, dry weight correction. Sample RDLs are highly matrix-dependent.

Surrogate: An organic compound which is similar to the target analyte(s) in chemical composition and behavior in the analytical process, but which is not normally found in environmental samples. These compounds are spiked into all blanks, standards, and samples prior to analysis. Percent recoveries are calculated for each surrogate.

Continuing Calibration Verification: The calibration relationship established during the initial calibration must be verified at periodic

Validated by:
Hanibal C. Tayeh, Ph.D.

DPW Project Number: BI-RT-843
Appendix #3
Addendum #6

Reasonable Confidence Protocols
Laboratory Analysis
QA/QC Certification Form

Laboratory Name: Spectrum Analytical, Inc.

Client: TRC - Windsor, CT

Project Location: Wilcox Technical High School - Meriden, CT

Project Number: [none]

Sampling Date(s):
3/28/2010

Laboratory Sample ID(s):
SB10735-01 through SB10735-04

RCP Methods Used:
SW846 8082

1	For each analytical method referenced in this laboratory report package, were all specified QA/QC performance criteria followed, including the requirement to explain any criteria falling outside of acceptable guidelines, as specified in the CT DEP method-specific Reasonable Confidence Protocol documents?	✓ Yes No
1A	Were the method specified preservation and holding time requirements met?	✓ Yes No
1B	***VPH and EPH methods only***: Was the VPH or EPH method conducted without significant modifications (see Section 11.3 of respective RCP methods)? * ** These methods have not yet been approved for release by CT DEP*	Yes No ✓ N/A
2	Were all samples received by the laboratory in a condition consistent with that described on the associated chain-of-custody document(s)?	✓ Yes No
3	Were samples received at an appropriate temperature?	✓ Yes No
4	Were all QA/QC performance criteria specified in the Reasonable Confidence Protocol documents achieved?	✓ Yes No
5	a) Were reporting limits specified or referenced on the chain-of-custody? * b) Were these reporting limits met? ** Exceptions are defined by qualifiers*	Yes ✓ No Yes No
6	For each analytical method referenced in this laboratory report package, were results reported for all constituents identified in the method-specific analyte lists presented in the Reasonable Confidence Protocol documents?	✓ Yes No
7	Are project-specific matrix spikes and laboratory duplicates included in this data set?	✓ Yes No

Note: For all questions to which the response was "No" (with the exception of question #7), additional information must be provided in an attached narrative. If the answer to question #1, #1A, or #1B is "No", the data package does not meet the requirements for "Reasonable Confidence."

I, the undersigned, attest under the pains and penalties of perjury that, to the best of my knowledge and belief and based upon my personal inquiry of those responsible for obtaining the information contained in this analytical report, such information is accurate and complete.

Hanibal C. Tayeh, Ph.D.
President/Laboratory Director
Date: 4/26/2010

DPW Project Number: BI-RT-843
Appendix #3
Addendum #6

SB 10735e

SPECTRUM ANALYTICAL, INC.
Featuring
HANIBAL TECHNOLOGY

CHAIN OF CUSTODY RECORD

Page 1 of ____

Special Handling:
- [x] Standard TAT - 7 to 10 business days
- [ ] Rush TAT - Date Needed: ____
- All TATs subject to laboratory approval. Min. 24-hour notification needed for rushes.
- Samples disposed of after 60 days unless otherwise instructed.

Report To: Malcolm Beeler - TRC
21 Griffin Rd North
Windsor, CT 06095
→ mbeeler@trcsolutions.com
Project Mgr.: ____

Invoice To: Rebecca Cutler
CT Dept. of Public Works
165 Capitol Ave, Room 275
Hartford, CT 06106
P.O. No.: ____ RQN: DAS

Project No.: ____
Site Name: Wilcox Technical High School
Location: Meriden State: CT
Sampler(s) Malcolm Beeler

1=$Na_2S_2O_3$ 2=HCl 3=H_2SO_4 4=HNO_3 5=NaOH 6=Ascorbic Acid
7=CH_3OH 8=$NaHSO_4$ 9= ICE 10= ____

DW=Drinking Water GW=Groundwater WW=Wastewater
O=Oil SW=Surface Water SO=Soil SL=Sludge A=Air
X1= Asphalt X2= ____ X3= ____

G=Grab C=Composite

QA Reporting Notes: (check if needed)
- [ ] Provide MA DEP MCP CAM Report
- [x] Provide CT DEP RCP Report

QA/QC Reporting Level
- [x] Standard
- [ ] No QC
- [ ] Other ____

State specific reporting standards: ____

Lab Id:	Sample Id:	Date:	Time:	Type	Matrix	Preservative	# of VOA Vials	# of Amber Glass	# of Clear Glass	# of Plastic	PCB (8082/3540)	Analyses:	QA Reporting Notes:
10735-01	NS-BB-S5	3/28/10	12:56	G	SO	9		1			X		Grab for NSBB Comp 3
-02	NS-BB-S6	"	16:30	G	SO	9		1			X		" " " " "
-03	NEC-BB-A6	"	16:05	G	X1	9			1		X		Grab for As Comp 1
-04	NS-BB-A7	"	13:00	G	X1	9			1		X		" " " " "

- [ ] Fax results when available to (____) ____
- [x] E-mail to mbeeler@trcsolutions.com and to eplimpton@trcsolutions.com
EDD Format ____

Condition upon receipt: [x] Iced [ ] Ambient [ ] °C 3°

Relinquished by:	Received by:	Date:	Time:
Michelle M Murphy	[signature]	4/16/10	1550
[signature]	[signature]	4/16/10	1632

Cooler

11 Almgren Drive • Agawam, Massachusetts 01001 • 413-789-9018 • Fax 413-789-4076 • www.spectrum-analytical.com

1.6

Report Date:
14-May-10 16:25

☑ Final Report
☐ Re-Issued Report
☐ Revised Report

DPW Project Number: BI-RT-843
Appendix #3
Addendum #6

SPECTRUM ANALYTICAL, INC.
Featuring
HANIBAL TECHNOLOGY

Laboratory Report

TRC
21 Griffin Road North
Windsor, CT 06095
Attn: Malcolm Beeler

Project: Wilcox Technical High School - Meriden, CT
Project #: 176153.0000.0000

Laboratory ID	Client Sample ID	Matrix	Date Sampled	Date Received
SB11920-01	NESBA-Comp 1	Soil	10-May-10 09:30	11-May-10 18:31
SB11920-02	NESBA-Comp 2	Soil	10-May-10 09:40	11-May-10 18:31
SB11920-03	NESBA-Comp 3	Soil	10-May-10 09:45	11-May-10 18:31
SB11920-04	NESBA-Comp 4	Soil	10-May-10 09:50	11-May-10 18:31
SB11920-05	NESBA-Comp 5	Soil	10-May-10 10:00	11-May-10 18:31
SB11920-06	NESBA-Comp 6	Soil	10-May-10 10:05	11-May-10 18:31
SB11920-07	NESBA-Comp 7	Soil	10-May-10 10:10	11-May-10 18:31
SB11920-08	NESBA-Comp 8	Soil	10-May-10 10:15	11-May-10 18:31
SB11920-09	NESBA-Comp 9	Soil	10-May-10 10:20	11-May-10 18:31
SB11920-10	NESBA-Comp 10	Soil	10-May-10 10:25	11-May-10 18:31
SB11920-11	NESBA-Comp 11	Soil	10-May-10 10:35	11-May-10 18:31
SB11920-12	NESBA-Comp 12	Soil	10-May-10 10:38	11-May-10 18:31
SB11920-13	FB050810	Ground Water	08-May-10 09:05	11-May-10 18:31
SB11920-14	NESBA-Comp 13	Soil	10-May-10 10:45	11-May-10 18:31
SB11920-15	NESBA-Comp 14	Soil	10-May-10 10:50	11-May-10 18:31
SB11920-16	NESBA-Comp 15	Soil	10-May-10 10:55	11-May-10 18:31
SB11920-17	NESBA-Comp 16	Soil	10-May-10 11:00	11-May-10 18:31
SB11920-18	NESBA-Comp 17	Soil	10-May-10 11:05	11-May-10 18:31
SB11920-19	NS-BB-Comp 1	Soil	10-May-10 11:15	11-May-10 18:31
SB11920-20	NS-BB-Comp 2	Soil	10-May-10 11:20	11-May-10 18:31
SB11920-21	NSBB-SS5	Soil	08-May-10 14:54	11-May-10 18:31
SB11920-22	NSBB-SS1E	Soil	08-May-10 14:57	11-May-10 18:31
SB11920-23	NSBB-SS(1')	Soil	08-May-10 15:00	11-May-10 18:31
SB11920-24	NWSBA-Comp 1	Soil	10-May-10 11:30	11-May-10 18:31
SB11920-25	NWSBA-Comp 2	Soil	10-May-10 11:35	11-May-10 18:31
SB11920-26	NWSBA-Comp 3	Soil	10-May-10 11:40	11-May-10 18:31
SB11920-27	NWSBA-Comp 4	Soil	10-May-10 11:45	11-May-10 18:31
SB11920-28	NWSBA-Comp 5	Soil	10-May-10 11:50	11-May-10 18:31
SB11920-29	NWSBA-Comp 6	Soil	10-May-10 11:55	11-May-10 18:31
SB11920-30	NWSBA-Comp 7	Soil	10-May-10 12:05	11-May-10 18:31
SB11920-31	NWSBA-Comp 8	Soil	10-May-10 12:30	11-May-10 18:31
SB11920-32	NWSBA-Comp 9	Soil	10-May-10 12:40	11-May-10 18:31
SB11920-33	NWSBA-Comp 10	Soil	10-May-10 12:45	11-May-10 18:31
SB11920-34	NWSBA-Comp 11	Soil	10-May-10 12:55	11-May-10 18:31
SB11920-35	NWSBA-Comp 12	Soil	10-May-10 12:57	11-May-10 18:31
SB11920-36	NWSBA-Comp 13	Soil	10-May-10 13:03	11-May-10 18:31
SB11920-37	NWSBA-Comp 14	Soil	10-May-10 13:08	11-May-10 18:31

SB11920-38	NWSBA-Comp 15	Soil	10-May-10 13:14	11-May-10 18:31
SB11920-39	NWSBA-Comp 16	Soil	10-May-10 13:17	11-May-10 18:31
SB11920-40	NWSBA-Comp 17	Soil	10-May-10 13:20	11-May-10 18:31
SB11920-41	NWSBA-Comp 18	Soil	10-May-10 13:25	11-May-10 18:31
SB11920-42	NWSBA-Comp 19	Soil	10-May-10 13:29	11-May-10 18:31
SB11920-43	NWSBA-Comp 20	Soil	10-May-10 13:34	11-May-10 18:31
SB11920-44	NWSBA-Comp 21	Soil	10-May-10 13:40	11-May-10 18:31
SB11920-45	NWSBA-Comp 22	Soil	10-May-10 13:46	11-May-10 18:31
SB11920-46	NWSBA-Comp 23	Soil	10-May-10 13:50	11-May-10 18:31
SB11920-47	NWSBA-Comp 24	Soil	10-May-10 13:55	11-May-10 18:31
SB11920-48	NWSBA-Comp 25	Soil	10-May-10 14:00	11-May-10 18:31
SB11920-49	NWSBA-Comp 26	Soil	10-May-10 13:00	11-May-10 18:31

I attest that the information contained within the report has been reviewed for accuracy and checked against the quality control requirements for each method. These results relate only to the sample(s) as received.
All applicable NELAC requirements have been met.

Massachusetts # M-MA138/MA1110
Connecticut # PH-0777
Florida # E87600/E87936
Maine # MA138
New Hampshire # 2538
New Jersey # MA011/MA012
New York # 11393/11840
Pennsylvania # 68-04426/68-02924
Rhode Island # 98
USDA # S-51435
Vermont # VT-11393

Authorized by:

Hanibal C. Tayeh, Ph.D.
President/Laboratory Director

Technical Reviewer's Initial:

Spectrum Analytical holds certification in the State of New York for the analytes as indicated with an X in the "Cert." column within this report. Please note that the State of New York does not offer certification for all analytes.
Please note that this report contains 59 pages of analytical data plus Chain of Custody document(s). When the Laboratory Report is indicated as revised, this report supersedes any previously dated reports for the laboratory ID(s) referenced above. Where this report identifies subcontracted analyses, copies of the subcontractor's test report are available upon request. This report may not be reproduced, except in full, without written approval from Spectrum Analytical, Inc.

Spectrum Analytical, Inc. is a NELAC accredited laboratory organization and meets NELAC testing standards. Use of the NELAC logo however does not insure that Spectrum is currently accredited for the specific method or analyte indicated. Please refer to our "Quality" web page at www.spectrum-analytical.com for a full listing of our current certifications and fields of accreditation. States in which Spectrum Analytical, Inc. holds NELAC certification are New York, New Hampshire, New Jersey and Florida. All analytical work for Volatile Organic and Air analysis are transferred to and conducted at our 830 Silver Street location (NY-11840, FL-E87936 and NJ-MA012).

Please contact the Laboratory or Technical Director at 800-789-9115 with any questions regarding the data contained in this laboratory report.

DPW Project Number: BI-RT-843
Appendix #3
Addendum #6

CASE NARRATIVE:

The sample temperature upon receipt by Spectrum Analytical courier was recorded as 1.1 degrees Celsius. The condition of these samples was further noted as received on ice. The samples were transported on ice to the laboratory facility and the temperature was recorded at 1.2 degrees Celsius upon receipt at the laboratory. Please refer to the Chain of Custody for details specific to sample receipt times.

An infrared thermometer with a tolerance of +/- 2.0 degrees Celsius was used immediately upon receipt of the samples.

If a Matrix Spike (MS), Matrix Spike Duplicate (MSD) or Duplicate (DUP) was not requested on the Chain of Custody, method criteria may have been fulfilled with a source sample not of this Sample Delivery Group.

Required site-specific Matrix Spike/Matrix Spike Duplicate (MS/MSD) must be requested by the client and sufficient sample must be submitted for the additional analyses. Samples submitted with insufficient volume/weight will not be analyzed for site specific MS/MSD, however a batch MS/MSD may be analyzed from a non-site specific sample.

CTDEP has published a list of analytical methods which provides a series of recommended protocols for the acquisition, analysis and reporting of analytical data in support of decisions being made utilizing the Reasonable Confidence Protocol (RCP). "Reasonable Confidence" can be established only for those methods published by the CTDEP in the RCP guidelines. The compounds and/or elements reported were specifically requested by the client on the Chain of Custody and in some cases may not include the full analyte list as defined in the method.

The CTDEP RCP requests that "all non-detects and all results below the reporting limit are reported as ND (Not Detected at the Specified Reporting Limit)". All non-detects and all results below the reporting limit are reported as "BRL" (Below the Reporting Limit) in this report.

If no reporting limits were specified or referenced on the chain-of-custody the laboratory's practical quantitation limits were applied.

Tetrachloro-m-xylene is recommended as a surrogate by the CTDEP RCP for the following SW846 Methods 8081, 8082 and 8151. Spectrum Analytical, Inc. uses Tetrachloro-m-xylene as the Internal Standard for these methods and Dibromooctaflourobiphenyl as the surrogate.

See below for any non-conformances and issues relating to quality control samples and/or sample analysis/matrix.

SW846 8082

Samples:

SB11920-34 *NWSBA-Comp 11*

The concentration indicated for this analyte is an estimated value. This value is considered an estimate (CLP E-flag).

Aroclor-1254

SB11920-49 *NWSBA-Comp 26*

The concentration indicated for this analyte is an estimated value. This value is considered an estimate (CLP E-flag).

Aroclor-1254

DPW Project Number: BI-RT-843
Appendix #3
Addendum #6

Sample Identification	Client Project #	Matrix	Collection Date/Time	Received
NESBA-Comp 1	176153.0000.0000	Soil	10-May-10 09:30	11-May-10
SB11920-01				

CAS No.	*Analyte(s)*	*Result*	*Flag*	*Units*	**RDL*	*Dilution*	*Method Ref.*	*Prepared*	*Analyzed*	*Analyst*	*Batch*	*Cert.*
Semivolatile Organic Compounds by GC												
Polychlorinated Biphenyls by SW846 8082 Prepared by method SW846 3540C												
12674-11-2	Aroclor-1016	BRL		µg/kg dry	22.3	1	SW846 8082	12-May-10	13-May-10	TG	1010000	X
11104-28-2	Aroclor-1221	BRL		µg/kg dry	22.3	1	"	"	"	"	"	X
11141-16-5	Aroclor-1232	BRL		µg/kg dry	22.3	1	"	"	"	"	"	X
53469-21-9	Aroclor-1242	BRL		µg/kg dry	22.3	1	"	"	"	"	"	X
12672-29-6	Aroclor-1248	BRL		µg/kg dry	22.3	1	"	"	"	"	"	X
11097-69-1	Aroclor-1254	27.2		µg/kg dry	22.3	1	"	"	"	"	"	X
11096-82-5	Aroclor-1260	29.8		µg/kg dry	22.3	1	"	"	"	"	"	X
37324-23-5	Aroclor-1262	BRL		µg/kg dry	22.3	1	"	"	"	"	"	X
11100-14-4	Aroclor-1268	BRL		µg/kg dry	22.3	1	"	"	"	"	"	X
Surrogate recoveries:												
10386-84-2	*4,4-DB-Octafluorobiphenyl (Sr)*	*75*			*30-150 %*		"	"	"	"	"	
10386-84-2	*4,4-DB-Octafluorobiphenyl (Sr) [2C]*	*80*			*30-150 %*		"	"	"	"	"	
2051-24-3	*Decachlorobiphenyl (Sr)*	*100*			*30-150 %*		"	"	"	"	"	
2051-24-3	*Decachlorobiphenyl (Sr) [2C]*	*85*			*30-150 %*		"	"	"	"	"	
General Chemistry Parameters												
	% Solids	87.7		%		1	SM2540 G Mod.	13-May-10	13-May-10	VK	1010086	

DPW Project Number: BI-RT-843
Appendix #3
Addendum #6

Sample Identification	Client Project #	Matrix	Collection Date/Time	Received
NESBA-Comp 2	176153.0000.0000	Soil	10-May-10 09:40	11-May-10
SB11920-02				

CAS No.	*Analyte(s)*	*Result*	*Flag*	*Units*	**RDL*	*Dilution*	*Method Ref.*	*Prepared*	*Analyzed*	*Analyst*	*Batch*	*Cert.*
Semivolatile Organic Compounds by GC												
Polychlorinated Biphenyls by SW846 8082 Prepared by method SW846 3540C												
12674-11-2	Aroclor-1016	BRL		µg/kg dry	22.1	1	SW846 8082	12-May-10	13-May-10	TG	1010000	X
11104-28-2	Aroclor-1221	BRL		µg/kg dry	22.1	1	"	"	"	"	"	X
11141-16-5	Aroclor-1232	BRL		µg/kg dry	22.1	1	"	"	"	"	"	X
53469-21-9	Aroclor-1242	BRL		µg/kg dry	22.1	1	"	"	"	"	"	X
12672-29-6	Aroclor-1248	BRL		µg/kg dry	22.1	1	"	"	"	"	"	X
11097-69-1	Aroclor-1254	110		µg/kg dry	22.1	1	"	"	"	"	"	X
11096-82-5	Aroclor-1260	116		µg/kg dry	22.1	1	"	"	"	"	"	X
37324-23-5	Aroclor-1262	BRL		µg/kg dry	22.1	1	"	"	"	"	"	X
11100-14-4	Aroclor-1268	BRL		µg/kg dry	22.1	1	"	"	"	"	"	X
Surrogate recoveries:												
10386-84-2	*4,4-DB-Octafluorobiphenyl (Sr)*	*75*			*30-150 %*		"	"	"	"	"	
10386-84-2	*4,4-DB-Octafluorobiphenyl (Sr) [2C]*	*75*			*30-150 %*		"	"	"	"	"	
2051-24-3	*Decachlorobiphenyl (Sr)*	*100*			*30-150 %*		"	"	"	"	"	
2051-24-3	*Decachlorobiphenyl (Sr) [2C]*	*80*			*30-150 %*		"	"	"	"	"	
General Chemistry Parameters												
	% Solids	84.6		%		1	SM2540 G Mod.	13-May-10	13-May-10	VK	1010086	

DPW Project Number: BI-RT-843
Appendix #3
Addendum #6

Sample Identification	Client Project #	Matrix	Collection Date/Time	Received
NESBA-Comp 3	176153.0000.0000	Soil	10-May-10 09:45	11-May-10
SB11920-03				

CAS No.	*Analyte(s)*	*Result*	*Flag*	*Units*	**RDL*	*Dilution*	*Method Ref.*	*Prepared*	*Analyzed*	*Analyst*	*Batch*	*Cert.*
Semivolatile Organic Compounds by GC												
Polychlorinated Biphenyls by SW846 8082 Prepared by method SW846 3540C												
12674-11-2	Aroclor-1016	BRL		µg/kg dry	22.4	1	SW846 8082	12-May-10	13-May-10	TG	1010000	X
11104-28-2	Aroclor-1221	BRL		µg/kg dry	22.4	1	"	"	"	"	"	X
11141-16-5	Aroclor-1232	BRL		µg/kg dry	22.4	1	"	"	"	"	"	X
53469-21-9	Aroclor-1242	BRL		µg/kg dry	22.4	1	"	"	"	"	"	X
12672-29-6	Aroclor-1248	BRL		µg/kg dry	22.4	1	"	"	"	"	"	X
11097-69-1	Aroclor-1254	49.7		µg/kg dry	22.4	1	"	"	"	"	"	X
11096-82-5	Aroclor-1260	101		µg/kg dry	22.4	1	"	"	"	"	"	X
37324-23-5	Aroclor-1262	BRL		µg/kg dry	22.4	1	"	"	"	"	"	X
11100-14-4	Aroclor-1268	BRL		µg/kg dry	22.4	1	"	"	"	"	"	X
Surrogate recoveries:												
10386-84-2	*4,4-DB-Octafluorobiphenyl (Sr)*	*75*			*30-150 %*		"	"	"	"	"	
10386-84-2	*4,4-DB-Octafluorobiphenyl (Sr) [2C]*	*80*			*30-150 %*		"	"	"	"	"	
2051-24-3	*Decachlorobiphenyl (Sr)*	*100*			*30-150 %*		"	"	"	"	"	
2051-24-3	*Decachlorobiphenyl (Sr) [2C]*	*85*			*30-150 %*		"	"	"	"	"	
General Chemistry Parameters												
	% Solids	85.5		%		1	SM2540 G Mod.	13-May-10	13-May-10	VK	1010086	

DPW Project Number: BI-RT-843
Appendix #3
Addendum #6

Sample Identification	Client Project #	Matrix	Collection Date/Time	Received
NESBA-Comp 4	176153.0000.0000	Soil	10-May-10 09:50	11-May-10
SB11920-04				

CAS No.	*Analyte(s)*	*Result*	*Flag*	*Units*	**RDL*	*Dilution*	*Method Ref.*	*Prepared*	*Analyzed*	*Analyst*	*Batch*	*Cert.*
Semivolatile Organic Compounds by GC												
Polychlorinated Biphenyls by SW846 8082 Prepared by method SW846 3540C												
12674-11-2	Aroclor-1016	BRL		µg/kg dry	21.2	1	SW846 8082	12-May-10	13-May-10	TG	1010000	X
11104-28-2	Aroclor-1221	BRL		µg/kg dry	21.2	1	"	"	"	"	"	X
11141-16-5	Aroclor-1232	BRL		µg/kg dry	21.2	1	"	"	"	"	"	X
53469-21-9	Aroclor-1242	BRL		µg/kg dry	21.2	1	"	"	"	"	"	X
12672-29-6	Aroclor-1248	BRL		µg/kg dry	21.2	1	"	"	"	"	"	X
11097-69-1	Aroclor-1254	BRL		µg/kg dry	21.2	1	"	"	"	"	"	X
11096-82-5	Aroclor-1260	48.9		µg/kg dry	21.2	1	"	"	"	"	"	X
37324-23-5	Aroclor-1262	BRL		µg/kg dry	21.2	1	"	"	"	"	"	X
11100-14-4	Aroclor-1268	BRL		µg/kg dry	21.2	1	"	"	"	"	"	X
Surrogate recoveries:												
10386-84-2	*4,4-DB-Octafluorobiphenyl (Sr)*	*75*			*30-150 %*		"	"	"	"	"	
10386-84-2	*4,4-DB-Octafluorobiphenyl (Sr) [2C]*	*80*			*30-150 %*		"	"	"	"	"	
2051-24-3	*Decachlorobiphenyl (Sr)*	*95*			*30-150 %*		"	"	"	"	"	
2051-24-3	*Decachlorobiphenyl (Sr) [2C]*	*85*			*30-150 %*		"	"	"	"	"	
General Chemistry Parameters												
	% Solids	90.2		%		1	SM2540 G Mod.	13-May-10	13-May-10	VK	1010086	

DPW Project Number: BI-RT-843
Appendix #3
Addendum #6

Sample Identification	Client Project #	Matrix	Collection Date/Time	Received
NESBA-Comp 5	176153.0000.0000	Soil	10-May-10 10:00	11-May-10
SB11920-05				

CAS No.	*Analyte(s)*	*Result*	*Flag*	*Units*	**RDL*	*Dilution*	*Method Ref.*	*Prepared*	*Analyzed*	*Analyst*	*Batch*	*Cert.*
Semivolatile Organic Compounds by GC												
Polychlorinated Biphenyls by SW846 8082 Prepared by method SW846 3540C												
12674-11-2	Aroclor-1016	BRL		µg/kg dry	22.1	1	SW846 8082	12-May-10	13-May-10	TG	1010000	X
11104-28-2	Aroclor-1221	BRL		µg/kg dry	22.1	1	"	"	"	"	"	X
11141-16-5	Aroclor-1232	BRL		µg/kg dry	22.1	1	"	"	"	"	"	X
53469-21-9	Aroclor-1242	BRL		µg/kg dry	22.1	1	"	"	"	"	"	X
12672-29-6	Aroclor-1248	BRL		µg/kg dry	22.1	1	"	"	"	"	"	X
11097-69-1	Aroclor-1254	25.3		µg/kg dry	22.1	1	"	"	"	"	"	X
11096-82-5	Aroclor-1260	34.7		µg/kg dry	22.1	1	"	"	"	"	"	X
37324-23-5	Aroclor-1262	BRL		µg/kg dry	22.1	1	"	"	"	"	"	X
11100-14-4	Aroclor-1268	BRL		µg/kg dry	22.1	1	"	"	"	"	"	X
Surrogate recoveries:												
10386-84-2	*4,4-DB-Octafluorobiphenyl (Sr)*	*75*			*30-150 %*		"	"	"	"	"	
10386-84-2	*4,4-DB-Octafluorobiphenyl (Sr) [2C]*	*80*			*30-150 %*		"	"	"	"	"	
2051-24-3	*Decachlorobiphenyl (Sr)*	*90*			*30-150 %*		"	"	"	"	"	
2051-24-3	*Decachlorobiphenyl (Sr) [2C]*	*80*			*30-150 %*		"	"	"	"	"	
General Chemistry Parameters												
	% Solids	88.3		%		1	SM2540 G Mod.	13-May-10	13-May-10	VK	1010086	

DPW Project Number: BI-RT-843
Appendix #3
Addendum #6

Sample Identification	Client Project #	Matrix	Collection Date/Time	Received
NESBA-Comp 6	176153.0000.0000	Soil	10-May-10 10:05	11-May-10
SB11920-06				

CAS No.	*Analyte(s)*	*Result*	*Flag*	*Units*	**RDL*	*Dilution*	*Method Ref.*	*Prepared*	*Analyzed*	*Analyst*	*Batch*	*Cert.*
Semivolatile Organic Compounds by GC												
Polychlorinated Biphenyls by SW846 8082 Prepared by method SW846 3540C												
12674-11-2	Aroclor-1016	BRL		µg/kg dry	20.9	1	SW846 8082	12-May-10	13-May-10	TG	1010000	X
11104-28-2	Aroclor-1221	BRL		µg/kg dry	20.9	1	"	"	"	"	"	X
11141-16-5	Aroclor-1232	BRL		µg/kg dry	20.9	1	"	"	"	"	"	X
53469-21-9	Aroclor-1242	BRL		µg/kg dry	20.9	1	"	"	"	"	"	X
12672-29-6	Aroclor-1248	BRL		µg/kg dry	20.9	1	"	"	"	"	"	X
11097-69-1	Aroclor-1254	BRL		µg/kg dry	20.9	1	"	"	"	"	"	X
11096-82-5	Aroclor-1260	BRL		µg/kg dry	20.9	1	"	"	"	"	"	X
37324-23-5	Aroclor-1262	BRL		µg/kg dry	20.9	1	"	"	"	"	"	X
11100-14-4	Aroclor-1268	BRL		µg/kg dry	20.9	1	"	"	"	"	"	X
Surrogate recoveries:												
10386-84-2	*4,4-DB-Octafluorobiphenyl (Sr)*	*75*			*30-150 %*		"	"	"	"	"	
10386-84-2	*4,4-DB-Octafluorobiphenyl (Sr) [2C]*	*75*			*30-150 %*		"	"	"	"	"	
2051-24-3	*Decachlorobiphenyl (Sr)*	*90*			*30-150 %*		"	"	"	"	"	
2051-24-3	*Decachlorobiphenyl (Sr) [2C]*	*75*			*30-150 %*		"	"	"	"	"	
General Chemistry Parameters												
	% Solids	90.8		%		1	SM2540 G Mod.	13-May-10	13-May-10	VK	1010086	

DPW Project Number: BI-RT-843
Appendix #3
Addendum #6

Sample Identification	Client Project #	Matrix	Collection Date/Time	Received
NESBA-Comp 7	176153.0000.0000	Soil	10-May-10 10:10	11-May-10
SB11920-07				

CAS No.	*Analyte(s)*	*Result*	*Flag*	*Units*	**RDL*	*Dilution*	*Method Ref.*	*Prepared*	*Analyzed*	*Analyst*	*Batch*	*Cert.*
Semivolatile Organic Compounds by GC												
Polychlorinated Biphenyls by SW846 8082 Prepared by method SW846 3540C												
12674-11-2	Aroclor-1016	BRL		µg/kg dry	21.6	1	SW846 8082	12-May-10	13-May-10	TG	1010000	X
11104-28-2	Aroclor-1221	BRL		µg/kg dry	21.6	1	"	"	"	"	"	X
11141-16-5	Aroclor-1232	BRL		µg/kg dry	21.6	1	"	"	"	"	"	X
53469-21-9	Aroclor-1242	BRL		µg/kg dry	21.6	1	"	"	"	"	"	X
12672-29-6	Aroclor-1248	BRL		µg/kg dry	21.6	1	"	"	"	"	"	X
11097-69-1	Aroclor-1254	64.4		µg/kg dry	21.6	1	"	"	"	"	"	X
11096-82-5	Aroclor-1260	49.7		µg/kg dry	21.6	1	"	"	"	"	"	X
37324-23-5	Aroclor-1262	BRL		µg/kg dry	21.6	1	"	"	"	"	"	X
11100-14-4	Aroclor-1268	BRL		µg/kg dry	21.6	1	"	"	"	"	"	X
Surrogate recoveries:												
10386-84-2	*4,4-DB-Octafluorobiphenyl (Sr)*	*70*			*30-150 %*		"	"	"	"	"	
10386-84-2	*4,4-DB-Octafluorobiphenyl (Sr) [2C]*	*70*			*30-150 %*		"	"	"	"	"	
2051-24-3	*Decachlorobiphenyl (Sr)*	*85*			*30-150 %*		"	"	"	"	"	
2051-24-3	*Decachlorobiphenyl (Sr) [2C]*	*65*			*30-150 %*		"	"	"	"	"	
General Chemistry Parameters												
	% Solids	90.7		%		1	SM2540 G Mod.	13-May-10	13-May-10	VK	1010086	

DPW Project Number: BI-RT-843
Appendix #3
Addendum #6

Sample Identification	Client Project #	Matrix	Collection Date/Time	Received
NESBA-Comp 8	176153.0000.0000	Soil	10-May-10 10:15	11-May-10
SB11920-08				

CAS No.	*Analyte(s)*	*Result*	*Flag*	*Units*	**RDL*	*Dilution*	*Method Ref.*	*Prepared*	*Analyzed*	*Analyst*	*Batch*	*Cert.*
Semivolatile Organic Compounds by GC												
Polychlorinated Biphenyls by SW846 8082 Prepared by method SW846 3540C												
12674-11-2	Aroclor-1016	BRL		µg/kg dry	20.1	1	SW846 8082	12-May-10	13-May-10	TG	1010000	X
11104-28-2	Aroclor-1221	BRL		µg/kg dry	20.1	1	"	"	"	"	"	X
11141-16-5	Aroclor-1232	BRL		µg/kg dry	20.1	1	"	"	"	"	"	X
53469-21-9	Aroclor-1242	BRL		µg/kg dry	20.1	1	"	"	"	"	"	X
12672-29-6	Aroclor-1248	BRL		µg/kg dry	20.1	1	"	"	"	"	"	X
11097-69-1	Aroclor-1254	BRL		µg/kg dry	20.1	1	"	"	"	"	"	X
11096-82-5	Aroclor-1260	BRL		µg/kg dry	20.1	1	"	"	"	"	"	X
37324-23-5	Aroclor-1262	BRL		µg/kg dry	20.1	1	"	"	"	"	"	X
11100-14-4	Aroclor-1268	BRL		µg/kg dry	20.1	1	"	"	"	"	"	X
Surrogate recoveries:												
10386-84-2	*4,4-DB-Octafluorobiphenyl (Sr)*	*75*			*30-150 %*		"	"	"	"	"	
10386-84-2	*4,4-DB-Octafluorobiphenyl (Sr) [2C]*	*70*			*30-150 %*		"	"	"	"	"	
2051-24-3	*Decachlorobiphenyl (Sr)*	*85*			*30-150 %*		"	"	"	"	"	
2051-24-3	*Decachlorobiphenyl (Sr) [2C]*	*70*			*30-150 %*		"	"	"	"	"	
General Chemistry Parameters												
	% Solids	92.8		%		1	SM2540 G Mod.	13-May-10	13-May-10	VK	1010086	

DPW Project Number: BI-RT-843
Appendix #3
Addendum #6

Sample Identification	Client Project #	Matrix	Collection Date/Time	Received
NESBA-Comp 9	176153.0000.0000	Soil	10-May-10 10:20	11-May-10
SB11920-09				

CAS No.	*Analyte(s)*	*Result*	*Flag*	*Units*	**RDL*	*Dilution*	*Method Ref.*	*Prepared*	*Analyzed*	*Analyst*	*Batch*	*Cert.*
Semivolatile Organic Compounds by GC												
Polychlorinated Biphenyls by SW846 8082 Prepared by method SW846 3540C												
12674-11-2	Aroclor-1016	BRL		µg/kg dry	24.9	1	SW846 8082	12-May-10	13-May-10	TG	1010000	X
11104-28-2	Aroclor-1221	BRL		µg/kg dry	24.9	1	"	"	"	"	"	X
11141-16-5	Aroclor-1232	BRL		µg/kg dry	24.9	1	"	"	"	"	"	X
53469-21-9	Aroclor-1242	BRL		µg/kg dry	24.9	1	"	"	"	"	"	X
12672-29-6	Aroclor-1248	BRL		µg/kg dry	24.9	1	"	"	"	"	"	X
11097-69-1	Aroclor-1254	69.2		µg/kg dry	24.9	1	"	"	"	"	"	X
11096-82-5	Aroclor-1260	54.4		µg/kg dry	24.9	1	"	"	"	"	"	X
37324-23-5	Aroclor-1262	BRL		µg/kg dry	24.9	1	"	"	"	"	"	X
11100-14-4	Aroclor-1268	BRL		µg/kg dry	24.9	1	"	"	"	"	"	X
Surrogate recoveries:												
10386-84-2	*4,4-DB-Octafluorobiphenyl (Sr)*	*70*			*30-150 %*		"	"	"	"	"	
10386-84-2	*4,4-DB-Octafluorobiphenyl (Sr) [2C]*	*70*			*30-150 %*		"	"	"	"	"	
2051-24-3	*Decachlorobiphenyl (Sr)*	*95*			*30-150 %*		"	"	"	"	"	
2051-24-3	*Decachlorobiphenyl (Sr) [2C]*	*60*			*30-150 %*		"	"	"	"	"	
General Chemistry Parameters												
	% Solids	79.0		%		1	SM2540 G Mod.	13-May-10	13-May-10	VK	1010086	

DPW Project Number: BI-RT-843
Appendix #3
Addendum #6

Sample Identification	Client Project #	Matrix	Collection Date/Time	Received
NESBA-Comp 10	176153.0000.0000	Soil	10-May-10 10:25	11-May-10
SB11920-10				

CAS No.	*Analyte(s)*	*Result*	*Flag*	*Units*	**RDL*	*Dilution*	*Method Ref.*	*Prepared*	*Analyzed*	*Analyst*	*Batch*	*Cert.*
Semivolatile Organic Compounds by GC												
Polychlorinated Biphenyls by SW846 8082 Prepared by method SW846 3540C												
12674-11-2	Aroclor-1016	BRL		µg/kg dry	24.5	1	SW846 8082	12-May-10	13-May-10	TG	1010000	X
11104-28-2	Aroclor-1221	BRL		µg/kg dry	24.5	1	"	"	"	"	"	X
11141-16-5	Aroclor-1232	BRL		µg/kg dry	24.5	1	"	"	"	"	"	X
53469-21-9	Aroclor-1242	BRL		µg/kg dry	24.5	1	"	"	"	"	"	X
12672-29-6	Aroclor-1248	BRL		µg/kg dry	24.5	1	"	"	"	"	"	X
11097-69-1	Aroclor-1254	38.2		µg/kg dry	24.5	1	"	"	"	"	"	X
11096-82-5	Aroclor-1260	BRL		µg/kg dry	24.5	1	"	"	"	"	"	X
37324-23-5	Aroclor-1262	BRL		µg/kg dry	24.5	1	"	"	"	"	"	X
11100-14-4	Aroclor-1268	BRL		µg/kg dry	24.5	1	"	"	"	"	"	X
Surrogate recoveries:												
10386-84-2	*4,4-DB-Octafluorobiphenyl (Sr)*	*70*			*30-150 %*		"	"	"	"	"	
10386-84-2	*4,4-DB-Octafluorobiphenyl (Sr) [2C]*	*75*			*30-150 %*		"	"	"	"	"	
2051-24-3	*Decachlorobiphenyl (Sr)*	*115*			*30-150 %*		"	"	"	"	"	
2051-24-3	*Decachlorobiphenyl (Sr) [2C]*	*65*			*30-150 %*		"	"	"	"	"	
General Chemistry Parameters												
	% Solids	80.5		%		1	SM2540 G Mod.	13-May-10	13-May-10	VK	1010086	

DPW Project Number: BI-RT-843
Appendix #3
Addendum #6

Sample Identification	Client Project #	Matrix	Collection Date/Time	Received
NESBA-Comp 11	176153.0000.0000	Soil	10-May-10 10:35	11-May-10
SB11920-11				

CAS No.	*Analyte(s)*	*Result*	*Flag*	*Units*	**RDL*	*Dilution*	*Method Ref.*	*Prepared*	*Analyzed*	*Analyst*	*Batch*	*Cert.*
Semivolatile Organic Compounds by GC												
Polychlorinated Biphenyls by SW846 8082 Prepared by method SW846 3540C												
12674-11-2	Aroclor-1016	BRL		µg/kg dry	23.9	1	SW846 8082	12-May-10	14-May-10	TG	1010000	X
11104-28-2	Aroclor-1221	BRL		µg/kg dry	23.9	1	"	"	"	"	"	X
11141-16-5	Aroclor-1232	BRL		µg/kg dry	23.9	1	"	"	"	"	"	X
53469-21-9	Aroclor-1242	BRL		µg/kg dry	23.9	1	"	"	"	"	"	X
12672-29-6	Aroclor-1248	BRL		µg/kg dry	23.9	1	"	"	"	"	"	X
11097-69-1	Aroclor-1254	34.3		µg/kg dry	23.9	1	"	"	"	"	"	X
11096-82-5	Aroclor-1260	BRL		µg/kg dry	23.9	1	"	"	"	"	"	X
37324-23-5	Aroclor-1262	BRL		µg/kg dry	23.9	1	"	"	"	"	"	X
11100-14-4	Aroclor-1268	BRL		µg/kg dry	23.9	1	"	"	"	"	"	X
Surrogate recoveries:												
10386-84-2	*4,4-DB-Octafluorobiphenyl (Sr)*	*75*			*30-150 %*		"	"	"	"	"	
10386-84-2	*4,4-DB-Octafluorobiphenyl (Sr) [2C]*	*80*			*30-150 %*		"	"	"	"	"	
2051-24-3	*Decachlorobiphenyl (Sr)*	*100*			*30-150 %*		"	"	"	"	"	
2051-24-3	*Decachlorobiphenyl (Sr) [2C]*	*85*			*30-150 %*		"	"	"	"	"	
General Chemistry Parameters												
	% Solids	80.2		%		1	SM2540 G Mod.	13-May-10	13-May-10	VK	1010086	

DPW Project Number: BI-RT-843
Appendix #3
Addendum #6

Sample Identification	Client Project #	Matrix	Collection Date/Time	Received
NESBA-Comp 12	176153.0000.0000	Soil	10-May-10 10:38	11-May-10
SB11920-12				

CAS No.	Analyte(s)	Result	Flag	Units	*RDL	Dilution	Method Ref.	Prepared	Analyzed	Analyst	Batch	Cert.
Semivolatile Organic Compounds by GC												
Polychlorinated Biphenyls by SW846 8082 Prepared by method SW846 3540C												
12674-11-2	Aroclor-1016	BRL		µg/kg dry	25.5	1	SW846 8082	12-May-10	14-May-10	TG	1010000	X
11104-28-2	Aroclor-1221	BRL		µg/kg dry	25.5	1	"	"	"	"	"	X
11141-16-5	Aroclor-1232	BRL		µg/kg dry	25.5	1	"	"	"	"	"	X
53469-21-9	Aroclor-1242	BRL		µg/kg dry	25.5	1	"	"	"	"	"	X
12672-29-6	Aroclor-1248	BRL		µg/kg dry	25.5	1	"	"	"	"	"	X
11097-69-1	Aroclor-1254	248		µg/kg dry	25.5	1	"	"	"	"	"	X
11096-82-5	Aroclor-1260	121		µg/kg dry	25.5	1	"	"	"	"	"	X
37324-23-5	Aroclor-1262	BRL		µg/kg dry	25.5	1	"	"	"	"	"	X
11100-14-4	Aroclor-1268	BRL		µg/kg dry	25.5	1	"	"	"	"	"	X
Surrogate recoveries:												
10386-84-2	*4,4-DB-Octafluorobiphenyl (Sr)*	*70*			*30-150 %*		"	"	"	"	"	
10386-84-2	*4,4-DB-Octafluorobiphenyl (Sr) [2C]*	*75*			*30-150 %*		"	"	"	"	"	
2051-24-3	*Decachlorobiphenyl (Sr)*	*85*			*30-150 %*		"	"	"	"	"	
2051-24-3	*Decachlorobiphenyl (Sr) [2C]*	*80*			*30-150 %*		"	"	"	"	"	
General Chemistry Parameters												
	% Solids	78.4		%		1	SM2540 G Mod.	13-May-10	13-May-10	VK	1010086	

Sample Identification	Client Project #	Matrix	Collection Date/Time	Received
FB050810	176153.0000.0000	Ground Water	08-May-10 09:05	11-May-10
SB11920-13				

CAS No.	Analyte(s)	Result	Flag	Units	*RDL	Dilution	Method Ref.	Prepared	Analyzed	Analyst	Batch	Cert.
Semivolatile Organic Compounds by GC												
Polychlorinated Biphenyls by SW846 8082 Prepared by method SW846 3510C												
12674-11-2	Aroclor-1016	BRL		µg/l	0.215	1	SW846 8082	13-May-10	14-May-10	SM	1010064	X
11104-28-2	Aroclor-1221	BRL		µg/l	0.215	1	"	"	"	"	"	X
11141-16-5	Aroclor-1232	BRL		µg/l	0.215	1	"	"	"	"	"	X
53469-21-9	Aroclor-1242	BRL		µg/l	0.215	1	"	"	"	"	"	X
12672-29-6	Aroclor-1248	BRL		µg/l	0.215	1	"	"	"	"	"	X
11097-69-1	Aroclor-1254	BRL		µg/l	0.215	1	"	"	"	"	"	X
11096-82-5	Aroclor-1260	BRL		µg/l	0.215	1	"	"	"	"	"	X
37324-23-5	Aroclor-1262	BRL		µg/l	0.215	1	"	"	"	"	"	X
11100-14-4	Aroclor-1268	BRL		µg/l	0.215	1	"	"	"	"	"	X
Surrogate recoveries:												
10386-84-2	*4,4-DB-Octafluorobiphenyl (Sr)*	*70*			*30-150 %*		"	"	"	"	"	
10386-84-2	*4,4-DB-Octafluorobiphenyl (Sr) [2C]*	*75*			*30-150 %*		"	"	"	"	"	
2051-24-3	*Decachlorobiphenyl (Sr)*	*39*			*30-150 %*		"	"	"	"	"	
2051-24-3	*Decachlorobiphenyl (Sr) [2C]*	*76*			*30-150 %*		"	"	"	"	"	

DPW Project Number: BI-RT-843
Appendix #3
Addendum #6

Sample Identification	Client Project #	Matrix	Collection Date/Time	Received
NESBA-Comp 13	176153.0000.0000	Soil	10-May-10 10:45	11-May-10
SB11920-14				

CAS No.	*Analyte(s)*	*Result*	*Flag*	*Units*	**RDL*	*Dilution*	*Method Ref.*	*Prepared*	*Analyzed*	*Analyst*	*Batch*	*Cert.*
Semivolatile Organic Compounds by GC												
Polychlorinated Biphenyls by SW846 8082 Prepared by method SW846 3540C												
12674-11-2	Aroclor-1016	BRL		µg/kg dry	24.7	1	SW846 8082	12-May-10	13-May-10	TG	1010000	X
11104-28-2	Aroclor-1221	BRL		µg/kg dry	24.7	1	"	"	"	"	"	X
11141-16-5	Aroclor-1232	BRL		µg/kg dry	24.7	1	"	"	"	"	"	X
53469-21-9	Aroclor-1242	BRL		µg/kg dry	24.7	1	"	"	"	"	"	X
12672-29-6	Aroclor-1248	BRL		µg/kg dry	24.7	1	"	"	"	"	"	X
11097-69-1	Aroclor-1254	54.1		µg/kg dry	24.7	1	"	"	"	"	"	X
11096-82-5	Aroclor-1260	58.5		µg/kg dry	24.7	1	"	"	"	"	"	X
37324-23-5	Aroclor-1262	BRL		µg/kg dry	24.7	1	"	"	"	"	"	X
11100-14-4	Aroclor-1268	BRL		µg/kg dry	24.7	1	"	"	"	"	"	X
Surrogate recoveries:												
10386-84-2	*4,4-DB-Octafluorobiphenyl (Sr)*	*75*			*30-150 %*		"	"	"	"	"	
10386-84-2	*4,4-DB-Octafluorobiphenyl (Sr) [2C]*	*80*			*30-150 %*		"	"	"	"	"	
2051-24-3	*Decachlorobiphenyl (Sr)*	*100*			*30-150 %*		"	"	"	"	"	
2051-24-3	*Decachlorobiphenyl (Sr) [2C]*	*95*			*30-150 %*		"	"	"	"	"	
General Chemistry Parameters												
	% Solids	80.6		%		1	SM2540 G Mod.	13-May-10	13-May-10	VK	1010086	

DPW Project Number: BI-RT-843
Appendix #3
Addendum #6

Sample Identification	Client Project #	Matrix	Collection Date/Time	Received
NESBA-Comp 14	176153.0000.0000	Soil	10-May-10 10:50	11-May-10
SB11920-15				

CAS No.	*Analyte(s)*	*Result*	*Flag*	*Units*	**RDL*	*Dilution*	*Method Ref.*	*Prepared*	*Analyzed*	*Analyst*	*Batch*	*Cert.*
Semivolatile Organic Compounds by GC												
Polychlorinated Biphenyls by SW846 8082 Prepared by method SW846 3540C												
12674-11-2	Aroclor-1016	BRL		µg/kg dry	24.6	1	SW846 8082	12-May-10	13-May-10	TG	1010000	X
11104-28-2	Aroclor-1221	BRL		µg/kg dry	24.6	1	"	"	"	"	"	X
11141-16-5	Aroclor-1232	BRL		µg/kg dry	24.6	1	"	"	"	"	"	X
53469-21-9	Aroclor-1242	BRL		µg/kg dry	24.6	1	"	"	"	"	"	X
12672-29-6	Aroclor-1248	BRL		µg/kg dry	24.6	1	"	"	"	"	"	X
11097-69-1	Aroclor-1254	114		µg/kg dry	24.6	1	"	"	"	"	"	X
11096-82-5	Aroclor-1260	78.1		µg/kg dry	24.6	1	"	"	"	"	"	X
37324-23-5	Aroclor-1262	BRL		µg/kg dry	24.6	1	"	"	"	"	"	X
11100-14-4	Aroclor-1268	BRL		µg/kg dry	24.6	1	"	"	"	"	"	X
Surrogate recoveries:												
10386-84-2	*4,4-DB-Octafluorobiphenyl (Sr)*	*75*			*30-150 %*		"	"	"	"	"	
10386-84-2	*4,4-DB-Octafluorobiphenyl (Sr) [2C]*	*80*			*30-150 %*		"	"	"	"	"	
2051-24-3	*Decachlorobiphenyl (Sr)*	*95*			*30-150 %*		"	"	"	"	"	
2051-24-3	*Decachlorobiphenyl (Sr) [2C]*	*80*			*30-150 %*		"	"	"	"	"	
General Chemistry Parameters												
	% Solids	78.3		%		1	SM2540 G Mod.	13-May-10	13-May-10	VK	1010086	

DPW Project Number: BI-RT-843
Appendix #3
Addendum #6

Sample Identification	Client Project #	Matrix	Collection Date/Time	Received
NESBA-Comp 15	176153.0000.0000	Soil	10-May-10 10:55	11-May-10
SB11920-16				

CAS No.	*Analyte(s)*	*Result*	*Flag*	*Units*	**RDL*	*Dilution*	*Method Ref.*	*Prepared*	*Analyzed*	*Analyst*	*Batch*	*Cert.*
Semivolatile Organic Compounds by GC												
Polychlorinated Biphenyls by SW846 8082 Prepared by method SW846 3540C												
12674-11-2	Aroclor-1016	BRL		µg/kg dry	24.6	1	SW846 8082	12-May-10	13-May-10	TG	1010000	X
11104-28-2	Aroclor-1221	BRL		µg/kg dry	24.6	1	"	"	"	"	"	X
11141-16-5	Aroclor-1232	BRL		µg/kg dry	24.6	1	"	"	"	"	"	X
53469-21-9	Aroclor-1242	BRL		µg/kg dry	24.6	1	"	"	"	"	"	X
12672-29-6	Aroclor-1248	BRL		µg/kg dry	24.6	1	"	"	"	"	"	X
11097-69-1	Aroclor-1254	76.0		µg/kg dry	24.6	1	"	"	"	"	"	X
11096-82-5	Aroclor-1260	61.6		µg/kg dry	24.6	1	"	"	"	"	"	X
37324-23-5	Aroclor-1262	BRL		µg/kg dry	24.6	1	"	"	"	"	"	X
11100-14-4	Aroclor-1268	BRL		µg/kg dry	24.6	1	"	"	"	"	"	X
Surrogate recoveries:												
10386-84-2	*4,4-DB-Octafluorobiphenyl (Sr)*	*75*			*30-150 %*		"	"	"	"	"	
10386-84-2	*4,4-DB-Octafluorobiphenyl (Sr) [2C]*	*75*			*30-150 %*		"	"	"	"	"	
2051-24-3	*Decachlorobiphenyl (Sr)*	*110*			*30-150 %*		"	"	"	"	"	
2051-24-3	*Decachlorobiphenyl (Sr) [2C]*	*90*			*30-150 %*		"	"	"	"	"	
General Chemistry Parameters												
	% Solids	79.5		%		1	SM2540 G Mod.	13-May-10	13-May-10	VK	1010086	

DPW Project Number: BI-RT-843
Appendix #3
Addendum #6

Sample Identification	Client Project #	Matrix	Collection Date/Time	Received
NESBA-Comp 16	176153.0000.0000	Soil	10-May-10 11:00	11-May-10
SB11920-17				

CAS No.	*Analyte(s)*	*Result*	*Flag*	*Units*	**RDL*	*Dilution*	*Method Ref.*	*Prepared*	*Analyzed*	*Analyst*	*Batch*	*Cert.*
Semivolatile Organic Compounds by GC												
Polychlorinated Biphenyls by SW846 8082 Prepared by method SW846 3540C												
12674-11-2	Aroclor-1016	BRL		µg/kg dry	24.7	1	SW846 8082	12-May-10	13-May-10	TG	1010000	X
11104-28-2	Aroclor-1221	BRL		µg/kg dry	24.7	1	"	"	"	"	"	X
11141-16-5	Aroclor-1232	BRL		µg/kg dry	24.7	1	"	"	"	"	"	X
53469-21-9	Aroclor-1242	BRL		µg/kg dry	24.7	1	"	"	"	"	"	X
12672-29-6	Aroclor-1248	BRL		µg/kg dry	24.7	1	"	"	"	"	"	X
11097-69-1	Aroclor-1254	58.1		µg/kg dry	24.7	1	"	"	"	"	"	X
11096-82-5	Aroclor-1260	55.5		µg/kg dry	24.7	1	"	"	"	"	"	X
37324-23-5	Aroclor-1262	BRL		µg/kg dry	24.7	1	"	"	"	"	"	X
11100-14-4	Aroclor-1268	BRL		µg/kg dry	24.7	1	"	"	"	"	"	X
Surrogate recoveries:												
10386-84-2	*4,4-DB-Octafluorobiphenyl (Sr)*	*75*			*30-150 %*		"	"	"	"	"	
10386-84-2	*4,4-DB-Octafluorobiphenyl (Sr) [2C]*	*80*			*30-150 %*		"	"	"	"	"	
2051-24-3	*Decachlorobiphenyl (Sr)*	*105*			*30-150 %*		"	"	"	"	"	
2051-24-3	*Decachlorobiphenyl (Sr) [2C]*	*95*			*30-150 %*		"	"	"	"	"	
General Chemistry Parameters												
	% Solids	79.6		%		1	SM2540 G Mod.	13-May-10	13-May-10	VK	1010086	

DPW Project Number: BI-RT-843
Appendix #3
Addendum #6

Sample Identification	Client Project #	Matrix	Collection Date/Time	Received
NESBA-Comp 17	176153.0000.0000	Soil	10-May-10 11:05	11-May-10
SB11920-18				

CAS No.	*Analyte(s)*	*Result*	*Flag*	*Units*	**RDL*	*Dilution*	*Method Ref.*	*Prepared*	*Analyzed*	*Analyst*	*Batch*	*Cert.*
Semivolatile Organic Compounds by GC												
Polychlorinated Biphenyls by SW846 8082 Prepared by method SW846 3540C												
12674-11-2	Aroclor-1016	BRL		µg/kg dry	24.9	1	SW846 8082	12-May-10	14-May-10	TG	1010000	X
11104-28-2	Aroclor-1221	BRL		µg/kg dry	24.9	1	"	"	"	"	"	X
11141-16-5	Aroclor-1232	BRL		µg/kg dry	24.9	1	"	"	"	"	"	X
53469-21-9	Aroclor-1242	BRL		µg/kg dry	24.9	1	"	"	"	"	"	X
12672-29-6	Aroclor-1248	BRL		µg/kg dry	24.9	1	"	"	"	"	"	X
11097-69-1	Aroclor-1254	55.7		µg/kg dry	24.9	1	"	"	"	"	"	X
11096-82-5	Aroclor-1260	48.1		µg/kg dry	24.9	1	"	"	"	"	"	X
37324-23-5	Aroclor-1262	BRL		µg/kg dry	24.9	1	"	"	"	"	"	X
11100-14-4	Aroclor-1268	BRL		µg/kg dry	24.9	1	"	"	"	"	"	X
Surrogate recoveries:												
10386-84-2	*4,4-DB-Octafluorobiphenyl (Sr)*	*80*			*30-150 %*		"	"	"	"	"	
10386-84-2	*4,4-DB-Octafluorobiphenyl (Sr) [2C]*	*80*			*30-150 %*		"	"	"	"	"	
2051-24-3	*Decachlorobiphenyl (Sr)*	*100*			*30-150 %*		"	"	"	"	"	
2051-24-3	*Decachlorobiphenyl (Sr) [2C]*	*90*			*30-150 %*		"	"	"	"	"	
General Chemistry Parameters												
	% Solids	79.7		%		1	SM2540 G Mod.	13-May-10	13-May-10	VK	1010086	

DPW Project Number: BI-RT-843
Appendix #3
Addendum #6

Sample Identification	Client Project #	Matrix	Collection Date/Time	Received
NS-BB-Comp 1	176153.0000.0000	Soil	10-May-10 11:15	11-May-10
SB11920-19				

CAS No.	*Analyte(s)*	*Result*	*Flag*	*Units*	**RDL*	*Dilution*	*Method Ref.*	*Prepared*	*Analyzed*	*Analyst*	*Batch*	*Cert.*
Semivolatile Organic Compounds by GC												
Polychlorinated Biphenyls by SW846 8082 Prepared by method SW846 3540C												
12674-11-2	Aroclor-1016	BRL		µg/kg dry	23.1	1	SW846 8082	12-May-10	14-May-10	TG	1010000	X
11104-28-2	Aroclor-1221	BRL		µg/kg dry	23.1	1	"	"	"	"	"	X
11141-16-5	Aroclor-1232	BRL		µg/kg dry	23.1	1	"	"	"	"	"	X
53469-21-9	Aroclor-1242	BRL		µg/kg dry	23.1	1	"	"	"	"	"	X
12672-29-6	Aroclor-1248	BRL		µg/kg dry	23.1	1	"	"	"	"	"	X
11097-69-1	Aroclor-1254	58.8		µg/kg dry	23.1	1	"	"	"	"	"	X
11096-82-5	Aroclor-1260	BRL		µg/kg dry	23.1	1	"	"	"	"	"	X
37324-23-5	Aroclor-1262	BRL		µg/kg dry	23.1	1	"	"	"	"	"	X
11100-14-4	Aroclor-1268	BRL		µg/kg dry	23.1	1	"	"	"	"	"	X
Surrogate recoveries:												
10386-84-2	*4,4-DB-Octafluorobiphenyl (Sr)*	*75*			*30-150 %*		"	"	"	"	"	
10386-84-2	*4,4-DB-Octafluorobiphenyl (Sr) [2C]*	*75*			*30-150 %*		"	"	"	"	"	
2051-24-3	*Decachlorobiphenyl (Sr)*	*105*			*30-150 %*		"	"	"	"	"	
2051-24-3	*Decachlorobiphenyl (Sr) [2C]*	*75*			*30-150 %*		"	"	"	"	"	
General Chemistry Parameters												
	% Solids	79.3		%		1	SM2540 G Mod.	13-May-10	13-May-10	VK	1010086	

DPW Project Number: BI-RT-843
Appendix #3
Addendum #6

Sample Identification	Client Project #	Matrix	Collection Date/Time	Received
NS-BB-Comp 2	176153.0000.0000	Soil	10-May-10 11:20	11-May-10
SB11920-20				

CAS No.	*Analyte(s)*	*Result*	*Flag*	*Units*	**RDL*	*Dilution*	*Method Ref.*	*Prepared*	*Analyzed*	*Analyst*	*Batch*	*Cert.*
Semivolatile Organic Compounds by GC												
Polychlorinated Biphenyls by SW846 8082 Prepared by method SW846 3540C												
12674-11-2	Aroclor-1016	BRL		µg/kg dry	21.4	1	SW846 8082	12-May-10	14-May-10	TG	1010000	X
11104-28-2	Aroclor-1221	BRL		µg/kg dry	21.4	1	"	"	"	"	"	X
11141-16-5	Aroclor-1232	BRL		µg/kg dry	21.4	1	"	"	"	"	"	X
53469-21-9	Aroclor-1242	BRL		µg/kg dry	21.4	1	"	"	"	"	"	X
12672-29-6	Aroclor-1248	BRL		µg/kg dry	21.4	1	"	"	"	"	"	X
11097-69-1	Aroclor-1254	83.3		µg/kg dry	21.4	1	"	"	"	"	"	X
11096-82-5	Aroclor-1260	22.2		µg/kg dry	21.4	1	"	"	"	"	"	X
37324-23-5	Aroclor-1262	BRL		µg/kg dry	21.4	1	"	"	"	"	"	X
11100-14-4	Aroclor-1268	BRL		µg/kg dry	21.4	1	"	"	"	"	"	X
Surrogate recoveries:												
10386-84-2	*4,4-DB-Octafluorobiphenyl (Sr)*	*70*			*30-150 %*		"	"	"	"	"	
10386-84-2	*4,4-DB-Octafluorobiphenyl (Sr) [2C]*	*75*			*30-150 %*		"	"	"	"	"	
2051-24-3	*Decachlorobiphenyl (Sr)*	*90*			*30-150 %*		"	"	"	"	"	
2051-24-3	*Decachlorobiphenyl (Sr) [2C]*	*80*			*30-150 %*		"	"	"	"	"	
General Chemistry Parameters												
	% Solids	89.3		%		1	SM2540 G Mod.	13-May-10	13-May-10	VK	1010086	

DPW Project Number: BI-RT-843
Appendix #3
Addendum #6

Sample Identification	Client Project #	Matrix	Collection Date/Time	Received
NSBB-SS5	176153.0000.0000	Soil	08-May-10 14:54	11-May-10
SB11920-21				

CAS No.	*Analyte(s)*	*Result*	*Flag*	*Units*	**RDL*	*Dilution*	*Method Ref.*	*Prepared*	*Analyzed*	*Analyst*	*Batch*	*Cert.*
Semivolatile Organic Compounds by GC												
Polychlorinated Biphenyls by SW846 8082 Prepared by method SW846 3540C												
12674-11-2	Aroclor-1016	BRL		µg/kg dry	24.3	1	SW846 8082	12-May-10	13-May-10	TG	1010000	X
11104-28-2	Aroclor-1221	BRL		µg/kg dry	24.3	1	"	"	"	"	"	X
11141-16-5	Aroclor-1232	BRL		µg/kg dry	24.3	1	"	"	"	"	"	X
53469-21-9	Aroclor-1242	BRL		µg/kg dry	24.3	1	"	"	"	"	"	X
12672-29-6	Aroclor-1248	BRL		µg/kg dry	24.3	1	"	"	"	"	"	X
11097-69-1	Aroclor-1254	BRL		µg/kg dry	24.3	1	"	"	"	"	"	X
11096-82-5	Aroclor-1260	BRL		µg/kg dry	24.3	1	"	"	"	"	"	X
37324-23-5	Aroclor-1262	BRL		µg/kg dry	24.3	1	"	"	"	"	"	X
11100-14-4	Aroclor-1268	BRL		µg/kg dry	24.3	1	"	"	"	"	"	X
Surrogate recoveries:												
10386-84-2	*4,4-DB-Octafluorobiphenyl (Sr)*	*70*			*30-150 %*		"	"	"	"	"	
10386-84-2	*4,4-DB-Octafluorobiphenyl (Sr) [2C]*	*70*			*30-150 %*		"	"	"	"	"	
2051-24-3	*Decachlorobiphenyl (Sr)*	*105*			*30-150 %*		"	"	"	"	"	
2051-24-3	*Decachlorobiphenyl (Sr) [2C]*	*85*			*30-150 %*		"	"	"	"	"	
General Chemistry Parameters												
	% Solids	76.2		%		1	SM2540 G Mod.	13-May-10	13-May-10	VK	1010086	

DPW Project Number: BI-RT-843
Appendix #3
Addendum #6

Sample Identification	Client Project #	Matrix	Collection Date/Time	Received
NSBB-SS1E	176153.0000.0000	Soil	08-May-10 14:57	11-May-10
SB11920-22				

CAS No.	*Analyte(s)*	*Result*	*Flag*	*Units*	**RDL*	*Dilution*	*Method Ref.*	*Prepared*	*Analyzed*	*Analyst*	*Batch*	*Cert.*
Semivolatile Organic Compounds by GC												
Polychlorinated Biphenyls by SW846 8082 Prepared by method SW846 3540C												
12674-11-2	Aroclor-1016	BRL		µg/kg dry	25.9	1	SW846 8082	12-May-10	13-May-10	TG	1010001	X
11104-28-2	Aroclor-1221	BRL		µg/kg dry	25.9	1	"	"	"	"	"	X
11141-16-5	Aroclor-1232	BRL		µg/kg dry	25.9	1	"	"	"	"	"	X
53469-21-9	Aroclor-1242	BRL		µg/kg dry	25.9	1	"	"	"	"	"	X
12672-29-6	Aroclor-1248	BRL		µg/kg dry	25.9	1	"	"	"	"	"	X
11097-69-1	Aroclor-1254	793		µg/kg dry	25.9	1	"	"	"	"	"	X
11096-82-5	Aroclor-1260	299		µg/kg dry	25.9	1	"	"	"	"	"	X
37324-23-5	Aroclor-1262	BRL		µg/kg dry	25.9	1	"	"	"	"	"	X
11100-14-4	Aroclor-1268	BRL		µg/kg dry	25.9	1	"	"	"	"	"	X
Surrogate recoveries:												
10386-84-2	*4,4-DB-Octafluorobiphenyl (Sr)*	*60*			*30-150 %*		"	"	"	"	"	
10386-84-2	*4,4-DB-Octafluorobiphenyl (Sr) [2C]*	*65*			*30-150 %*		"	"	"	"	"	
2051-24-3	*Decachlorobiphenyl (Sr)*	*80*			*30-150 %*		"	"	"	"	"	
2051-24-3	*Decachlorobiphenyl (Sr) [2C]*	*65*			*30-150 %*		"	"	"	"	"	
General Chemistry Parameters												
	% Solids	73.2		%		1	SM2540 G Mod.	13-May-10	13-May-10	VK	1010088	

DPW Project Number: BI-RT-843
Appendix #3
Addendum #6

Sample Identification	Client Project #	Matrix	Collection Date/Time	Received
NSBB-SS(1')	176153.0000.0000	Soil	08-May-10 15:00	11-May-10
SB11920-23				

CAS No.	*Analyte(s)*	*Result*	*Flag*	*Units*	**RDL*	*Dilution*	*Method Ref.*	*Prepared*	*Analyzed*	*Analyst*	*Batch*	*Cert.*
Semivolatile Organic Compounds by GC												
Polychlorinated Biphenyls by SW846 8082 Prepared by method SW846 3540C												
12674-11-2	Aroclor-1016	BRL		µg/kg dry	20.4	1	SW846 8082	12-May-10	13-May-10	TG	1010001	X
11104-28-2	Aroclor-1221	BRL		µg/kg dry	20.4	1	"	"	"	"	"	X
11141-16-5	Aroclor-1232	BRL		µg/kg dry	20.4	1	"	"	"	"	"	X
53469-21-9	Aroclor-1242	BRL		µg/kg dry	20.4	1	"	"	"	"	"	X
12672-29-6	Aroclor-1248	BRL		µg/kg dry	20.4	1	"	"	"	"	"	X
11097-69-1	Aroclor-1254	BRL		µg/kg dry	20.4	1	"	"	"	"	"	X
11096-82-5	Aroclor-1260	BRL		µg/kg dry	20.4	1	"	"	"	"	"	X
37324-23-5	Aroclor-1262	BRL		µg/kg dry	20.4	1	"	"	"	"	"	X
11100-14-4	Aroclor-1268	BRL		µg/kg dry	20.4	1	"	"	"	"	"	X
Surrogate recoveries:												
10386-84-2	*4,4-DB-Octafluorobiphenyl (Sr)*	*75*			*30-150 %*		"	"	"	"	"	
10386-84-2	*4,4-DB-Octafluorobiphenyl (Sr) [2C]*	*80*			*30-150 %*		"	"	"	"	"	
2051-24-3	*Decachlorobiphenyl (Sr)*	*90*			*30-150 %*		"	"	"	"	"	
2051-24-3	*Decachlorobiphenyl (Sr) [2C]*	*90*			*30-150 %*		"	"	"	"	"	
General Chemistry Parameters												
	% Solids	89.7		%		1	SM2540 G Mod.	13-May-10	13-May-10	VK	1010088	

DPW Project Number: BI-RT-843
Appendix #3
Addendum #6

Sample Identification	Client Project #	Matrix	Collection Date/Time	Received
NWSBA-Comp 1 SB11920-24	176153.0000.0000	Soil	10-May-10 11:30	11-May-10

CAS No.	*Analyte(s)*	*Result*	*Flag*	*Units*	**RDL*	*Dilution*	*Method Ref.*	*Prepared*	*Analyzed*	*Analyst*	*Batch*	*Cert.*
Semivolatile Organic Compounds by GC												
Polychlorinated Biphenyls by SW846 8082 Prepared by method SW846 3540C												
12674-11-2	Aroclor-1016	BRL		µg/kg dry	22.7	1	SW846 8082	12-May-10	13-May-10	TG	1010001	X
11104-28-2	Aroclor-1221	BRL		µg/kg dry	22.7	1	"	"	"	"	"	X
11141-16-5	Aroclor-1232	BRL		µg/kg dry	22.7	1	"	"	"	"	"	X
53469-21-9	Aroclor-1242	BRL		µg/kg dry	22.7	1	"	"	"	"	"	X
12672-29-6	Aroclor-1248	BRL		µg/kg dry	22.7	1	"	"	"	"	"	X
11097-69-1	Aroclor-1254	98.0		µg/kg dry	22.7	1	"	"	"	"	"	X
11096-82-5	Aroclor-1260	31.7		µg/kg dry	22.7	1	"	"	"	"	"	X
37324-23-5	Aroclor-1262	BRL		µg/kg dry	22.7	1	"	"	"	"	"	X
11100-14-4	Aroclor-1268	BRL		µg/kg dry	22.7	1	"	"	"	"	"	X
Surrogate recoveries:												
10386-84-2	*4,4-DB-Octafluorobiphenyl (Sr)*	*75*			*30-150 %*		"	"	"	"	"	
10386-84-2	*4,4-DB-Octafluorobiphenyl (Sr) [2C]*	*80*			*30-150 %*		"	"	"	"	"	
2051-24-3	*Decachlorobiphenyl (Sr)*	*85*			*30-150 %*		"	"	"	"	"	
2051-24-3	*Decachlorobiphenyl (Sr) [2C]*	*75*			*30-150 %*		"	"	"	"	"	
General Chemistry Parameters												
	% Solids	85.3		%		1	SM2540 G Mod.	13-May-10	13-May-10	VK	1010088	

DPW Project Number: BI-RT-843
Appendix #3
Addendum #6

Sample Identification	Client Project #	Matrix	Collection Date/Time	Received
NWSBA-Comp 2	176153.0000.0000	Soil	10-May-10 11:35	11-May-10
SB11920-25				

CAS No.	*Analyte(s)*	*Result*	*Flag*	*Units*	**RDL*	*Dilution*	*Method Ref.*	*Prepared*	*Analyzed*	*Analyst*	*Batch*	*Cert.*
Semivolatile Organic Compounds by GC												
Polychlorinated Biphenyls by SW846 8082 Prepared by method SW846 3540C												
12674-11-2	Aroclor-1016	BRL		µg/kg dry	22.6	1	SW846 8082	12-May-10	13-May-10	TG	1010001	X
11104-28-2	Aroclor-1221	BRL		µg/kg dry	22.6	1	"	"	"	"	"	X
11141-16-5	Aroclor-1232	BRL		µg/kg dry	22.6	1	"	"	"	"	"	X
53469-21-9	Aroclor-1242	BRL		µg/kg dry	22.6	1	"	"	"	"	"	X
12672-29-6	Aroclor-1248	BRL		µg/kg dry	22.6	1	"	"	"	"	"	X
11097-69-1	Aroclor-1254	571		µg/kg dry	22.6	1	"	"	"	"	"	X
11096-82-5	Aroclor-1260	142		µg/kg dry	22.6	1	"	"	"	"	"	X
37324-23-5	Aroclor-1262	BRL		µg/kg dry	22.6	1	"	"	"	"	"	X
11100-14-4	Aroclor-1268	BRL		µg/kg dry	22.6	1	"	"	"	"	"	X
Surrogate recoveries:												
10386-84-2	*4,4-DB-Octafluorobiphenyl (Sr)*	*80*			*30-150 %*		"	"	"	"	"	
10386-84-2	*4,4-DB-Octafluorobiphenyl (Sr) [2C]*	*80*			*30-150 %*		"	"	"	"	"	
2051-24-3	*Decachlorobiphenyl (Sr)*	*85*			*30-150 %*		"	"	"	"	"	
2051-24-3	*Decachlorobiphenyl (Sr) [2C]*	*80*			*30-150 %*		"	"	"	"	"	
General Chemistry Parameters												
	% Solids	86.3		%		1	SM2540 G Mod.	13-May-10	13-May-10	VK	1010088	

DPW Project Number: BI-RT-843
Appendix #3
Addendum #6

Sample Identification	Client Project #	Matrix	Collection Date/Time	Received
NWSBA-Comp 3	176153.0000.0000	Soil	10-May-10 11:40	11-May-10
SB11920-26				

CAS No.	*Analyte(s)*	*Result*	*Flag*	*Units*	**RDL*	*Dilution*	*Method Ref.*	*Prepared*	*Analyzed*	*Analyst*	*Batch*	*Cert.*
Semivolatile Organic Compounds by GC												
Polychlorinated Biphenyls by SW846 8082 Prepared by method SW846 3540C												
12674-11-2	Aroclor-1016	BRL		µg/kg dry	21.9	1	SW846 8082	12-May-10	13-May-10	TG	1010001	X
11104-28-2	Aroclor-1221	BRL		µg/kg dry	21.9	1	"	"	"	"	"	X
11141-16-5	Aroclor-1232	BRL		µg/kg dry	21.9	1	"	"	"	"	"	X
53469-21-9	Aroclor-1242	BRL		µg/kg dry	21.9	1	"	"	"	"	"	X
12672-29-6	Aroclor-1248	BRL		µg/kg dry	21.9	1	"	"	"	"	"	X
11097-69-1	Aroclor-1254	79.6		µg/kg dry	21.9	1	"	"	"	"	"	X
11096-82-5	Aroclor-1260	BRL		µg/kg dry	21.9	1	"	"	"	"	"	X
37324-23-5	Aroclor-1262	BRL		µg/kg dry	21.9	1	"	"	"	"	"	X
11100-14-4	Aroclor-1268	BRL		µg/kg dry	21.9	1	"	"	"	"	"	X
Surrogate recoveries:												
10386-84-2	*4,4-DB-Octafluorobiphenyl (Sr)*	*75*			*30-150 %*		"	"	"	"	"	
10386-84-2	*4,4-DB-Octafluorobiphenyl (Sr) [2C]*	*80*			*30-150 %*		"	"	"	"	"	
2051-24-3	*Decachlorobiphenyl (Sr)*	*80*			*30-150 %*		"	"	"	"	"	
2051-24-3	*Decachlorobiphenyl (Sr) [2C]*	*75*			*30-150 %*		"	"	"	"	"	
General Chemistry Parameters												
	% Solids	86.7		%		1	SM2540 G Mod.	13-May-10	13-May-10	VK	1010088	

DPW Project Number: BI-RT-843
Appendix #3
Addendum #6

Sample Identification	Client Project #	Matrix	Collection Date/Time	Received
NWSBA-Comp 4	176153.0000.0000	Soil	10-May-10 11:45	11-May-10
SB11920-27				

CAS No.	*Analyte(s)*	*Result*	*Flag*	*Units*	**RDL*	*Dilution*	*Method Ref.*	*Prepared*	*Analyzed*	*Analyst*	*Batch*	*Cert.*
Semivolatile Organic Compounds by GC												
Polychlorinated Biphenyls by SW846 8082 Prepared by method SW846 3540C												
12674-11-2	Aroclor-1016	BRL		µg/kg dry	22.4	1	SW846 8082	12-May-10	13-May-10	TG	1010001	X
11104-28-2	Aroclor-1221	BRL		µg/kg dry	22.4	1	"	"	"	"	"	X
11141-16-5	Aroclor-1232	BRL		µg/kg dry	22.4	1	"	"	"	"	"	X
53469-21-9	Aroclor-1242	BRL		µg/kg dry	22.4	1	"	"	"	"	"	X
12672-29-6	Aroclor-1248	BRL		µg/kg dry	22.4	1	"	"	"	"	"	X
11097-69-1	Aroclor-1254	1,440		µg/kg dry	22.4	1	"	"	"	"	"	X
11096-82-5	Aroclor-1260	320		µg/kg dry	22.4	1	"	"	"	"	"	X
37324-23-5	Aroclor-1262	BRL		µg/kg dry	22.4	1	"	"	"	"	"	X
11100-14-4	Aroclor-1268	BRL		µg/kg dry	22.4	1	"	"	"	"	"	X
Surrogate recoveries:												
10386-84-2	*4,4-DB-Octafluorobiphenyl (Sr)*	*75*			*30-150 %*		"	"	"	"	"	
10386-84-2	*4,4-DB-Octafluorobiphenyl (Sr) [2C]*	*75*			*30-150 %*		"	"	"	"	"	
2051-24-3	*Decachlorobiphenyl (Sr)*	*75*			*30-150 %*		"	"	"	"	"	
2051-24-3	*Decachlorobiphenyl (Sr) [2C]*	*70*			*30-150 %*		"	"	"	"	"	
General Chemistry Parameters												
	% Solids	85.5		%		1	SM2540 G Mod.	13-May-10	13-May-10	VK	1010088	

DPW Project Number: BI-RT-843
Appendix #3
Addendum #6

Sample Identification	Client Project #	Matrix	Collection Date/Time	Received
NWSBA-Comp 5 SB11920-28	176153.0000.0000	Soil	10-May-10 11:50	11-May-10

CAS No.	*Analyte(s)*	*Result*	*Flag*	*Units*	**RDL*	*Dilution*	*Method Ref.*	*Prepared*	*Analyzed*	*Analyst*	*Batch*	*Cert.*
Semivolatile Organic Compounds by GC												
Polychlorinated Biphenyls by SW846 8082 Prepared by method SW846 3540C												
12674-11-2	Aroclor-1016	BRL		µg/kg dry	22.0	1	SW846 8082	12-May-10	13-May-10	TG	1010001	X
11104-28-2	Aroclor-1221	BRL		µg/kg dry	22.0	1	"	"	"	"	"	X
11141-16-5	Aroclor-1232	BRL		µg/kg dry	22.0	1	"	"	"	"	"	X
53469-21-9	Aroclor-1242	BRL		µg/kg dry	22.0	1	"	"	"	"	"	X
12672-29-6	Aroclor-1248	BRL		µg/kg dry	22.0	1	"	"	"	"	"	X
11097-69-1	Aroclor-1254	342		µg/kg dry	22.0	1	"	"	"	"	"	X
11096-82-5	Aroclor-1260	117		µg/kg dry	22.0	1	"	"	"	"	"	X
37324-23-5	Aroclor-1262	BRL		µg/kg dry	22.0	1	"	"	"	"	"	X
11100-14-4	Aroclor-1268	BRL		µg/kg dry	22.0	1	"	"	"	"	"	X
Surrogate recoveries:												
10386-84-2	*4,4-DB-Octafluorobiphenyl (Sr)*	*75*			*30-150 %*		"	"	"	"	"	
10386-84-2	*4,4-DB-Octafluorobiphenyl (Sr) [2C]*	*75*			*30-150 %*		"	"	"	"	"	
2051-24-3	*Decachlorobiphenyl (Sr)*	*80*			*30-150 %*		"	"	"	"	"	
2051-24-3	*Decachlorobiphenyl (Sr) [2C]*	*80*			*30-150 %*		"	"	"	"	"	
General Chemistry Parameters												
	% Solids	87.8		%		1	SM2540 G Mod.	13-May-10	13-May-10	VK	1010088	

DPW Project Number: BI-RT-843
Appendix #3
Addendum #6

Sample Identification	Client Project #	Matrix	Collection Date/Time	Received
NWSBA-Comp 6	176153.0000.0000	Soil	10-May-10 11:55	11-May-10
SB11920-29				

CAS No.	*Analyte(s)*	*Result*	*Flag*	*Units*	**RDL*	*Dilution*	*Method Ref.*	*Prepared*	*Analyzed*	*Analyst*	*Batch*	*Cert.*
Semivolatile Organic Compounds by GC												
Polychlorinated Biphenyls by SW846 8082 Prepared by method SW846 3540C												
12674-11-2	Aroclor-1016	BRL		µg/kg dry	21.0	1	SW846 8082	12-May-10	13-May-10	TG	1010001	X
11104-28-2	Aroclor-1221	BRL		µg/kg dry	21.0	1	"	"	"	"	"	X
11141-16-5	Aroclor-1232	BRL		µg/kg dry	21.0	1	"	"	"	"	"	X
53469-21-9	Aroclor-1242	BRL		µg/kg dry	21.0	1	"	"	"	"	"	X
12672-29-6	Aroclor-1248	BRL		µg/kg dry	21.0	1	"	"	"	"	"	X
11097-69-1	Aroclor-1254	21.3		µg/kg dry	21.0	1	"	"	"	"	"	X
11096-82-5	Aroclor-1260	BRL		µg/kg dry	21.0	1	"	"	"	"	"	X
37324-23-5	Aroclor-1262	BRL		µg/kg dry	21.0	1	"	"	"	"	"	X
11100-14-4	Aroclor-1268	BRL		µg/kg dry	21.0	1	"	"	"	"	"	X
Surrogate recoveries:												
10386-84-2	*4,4-DB-Octafluorobiphenyl (Sr)*	*65*			*30-150 %*		"	"	"	"	"	
10386-84-2	*4,4-DB-Octafluorobiphenyl (Sr) [2C]*	*65*			*30-150 %*		"	"	"	"	"	
2051-24-3	*Decachlorobiphenyl (Sr)*	*70*			*30-150 %*		"	"	"	"	"	
2051-24-3	*Decachlorobiphenyl (Sr) [2C]*	*65*			*30-150 %*		"	"	"	"	"	
General Chemistry Parameters												
	% Solids	89.5		%		1	SM2540 G Mod.	13-May-10	13-May-10	VK	1010088	

DPW Project Number: BI-RT-843
Appendix #3
Addendum #6

Sample Identification	Client Project #	Matrix	Collection Date/Time	Received
NWSBA-Comp 7 SB11920-30	176153.0000.0000	Soil	10-May-10 12:05	11-May-10

CAS No.	*Analyte(s)*	*Result*	*Flag*	*Units*	**RDL*	*Dilution*	*Method Ref.*	*Prepared*	*Analyzed*	*Analyst*	*Batch*	*Cert.*
Semivolatile Organic Compounds by GC												
Polychlorinated Biphenyls by SW846 8082 Prepared by method SW846 3540C												
12674-11-2	Aroclor-1016	BRL		µg/kg dry	20.8	1	SW846 8082	12-May-10	13-May-10	TG	1010001	X
11104-28-2	Aroclor-1221	BRL		µg/kg dry	20.8	1	"	"	"	"	"	X
11141-16-5	Aroclor-1232	BRL		µg/kg dry	20.8	1	"	"	"	"	"	X
53469-21-9	Aroclor-1242	BRL		µg/kg dry	20.8	1	"	"	"	"	"	X
12672-29-6	Aroclor-1248	BRL		µg/kg dry	20.8	1	"	"	"	"	"	X
11097-69-1	Aroclor-1254	209		µg/kg dry	20.8	1	"	"	"	"	"	X
11096-82-5	Aroclor-1260	37.3		µg/kg dry	20.8	1	"	"	"	"	"	X
37324-23-5	Aroclor-1262	BRL		µg/kg dry	20.8	1	"	"	"	"	"	X
11100-14-4	Aroclor-1268	BRL		µg/kg dry	20.8	1	"	"	"	"	"	X
Surrogate recoveries:												
10386-84-2	*4,4-DB-Octafluorobiphenyl (Sr)*	*75*			*30-150 %*		"	"	"	"	"	
10386-84-2	*4,4-DB-Octafluorobiphenyl (Sr) [2C]*	*75*			*30-150 %*		"	"	"	"	"	
2051-24-3	*Decachlorobiphenyl (Sr)*	*80*			*30-150 %*		"	"	"	"	"	
2051-24-3	*Decachlorobiphenyl (Sr) [2C]*	*75*			*30-150 %*		"	"	"	"	"	
General Chemistry Parameters												
	% Solids	88.2		%		1	SM2540 G Mod.	13-May-10	13-May-10	VK	1010088	

DPW Project Number: BI-RT-843
Appendix #3
Addendum #6

Sample Identification	Client Project #	Matrix	Collection Date/Time	Received
NWSBA-Comp 8	176153.0000.0000	Soil	10-May-10 12:30	11-May-10
SB11920-31				

CAS No.	*Analyte(s)*	*Result*	*Flag*	*Units*	**RDL*	*Dilution*	*Method Ref.*	*Prepared*	*Analyzed*	*Analyst*	*Batch*	*Cert.*
Semivolatile Organic Compounds by GC												
Polychlorinated Biphenyls by SW846 8082 Prepared by method SW846 3540C												
12674-11-2	Aroclor-1016	BRL		µg/kg dry	21.8	1	SW846 8082	12-May-10	13-May-10	TG	1010001	X
11104-28-2	Aroclor-1221	BRL		µg/kg dry	21.8	1	"	"	"	"	"	X
11141-16-5	Aroclor-1232	BRL		µg/kg dry	21.8	1	"	"	"	"	"	X
53469-21-9	Aroclor-1242	BRL		µg/kg dry	21.8	1	"	"	"	"	"	X
12672-29-6	Aroclor-1248	BRL		µg/kg dry	21.8	1	"	"	"	"	"	X
11097-69-1	Aroclor-1254	BRL		µg/kg dry	21.8	1	"	"	"	"	"	X
11096-82-5	Aroclor-1260	BRL		µg/kg dry	21.8	1	"	"	"	"	"	X
37324-23-5	Aroclor-1262	BRL		µg/kg dry	21.8	1	"	"	"	"	"	X
11100-14-4	Aroclor-1268	BRL		µg/kg dry	21.8	1	"	"	"	"	"	X
Surrogate recoveries:												
10386-84-2	*4,4-DB-Octafluorobiphenyl (Sr)*	*80*			*30-150 %*		"	"	"	"	"	
10386-84-2	*4,4-DB-Octafluorobiphenyl (Sr) [2C]*	*75*			*30-150 %*		"	"	"	"	"	
2051-24-3	*Decachlorobiphenyl (Sr)*	*80*			*30-150 %*		"	"	"	"	"	
2051-24-3	*Decachlorobiphenyl (Sr) [2C]*	*80*			*30-150 %*		"	"	"	"	"	
General Chemistry Parameters												
	% Solids	88.9		%		1	SM2540 G Mod.	13-May-10	13-May-10	VK	1010088	

DPW Project Number: BI-RT-843
Appendix #3
Addendum #6

Sample Identification	Client Project #	Matrix	Collection Date/Time	Received
NWSBA-Comp 9	176153.0000.0000	Soil	10-May-10 12:40	11-May-10
SB11920-32				

CAS No.	*Analyte(s)*	*Result*	*Flag*	*Units*	**RDL*	*Dilution*	*Method Ref.*	*Prepared*	*Analyzed*	*Analyst*	*Batch*	*Cert.*
Semivolatile Organic Compounds by GC												
Polychlorinated Biphenyls by SW846 8082 Prepared by method SW846 3540C												
12674-11-2	Aroclor-1016	BRL		µg/kg dry	21.3	1	SW846 8082	12-May-10	13-May-10	TG	1010001	X
11104-28-2	Aroclor-1221	BRL		µg/kg dry	21.3	1	"	"	"	"	"	X
11141-16-5	Aroclor-1232	BRL		µg/kg dry	21.3	1	"	"	"	"	"	X
53469-21-9	Aroclor-1242	BRL		µg/kg dry	21.3	1	"	"	"	"	"	X
12672-29-6	Aroclor-1248	BRL		µg/kg dry	21.3	1	"	"	"	"	"	X
11097-69-1	Aroclor-1254	73.2		µg/kg dry	21.3	1	"	"	"	"	"	X
11096-82-5	Aroclor-1260	BRL		µg/kg dry	21.3	1	"	"	"	"	"	X
37324-23-5	Aroclor-1262	BRL		µg/kg dry	21.3	1	"	"	"	"	"	X
11100-14-4	Aroclor-1268	BRL		µg/kg dry	21.3	1	"	"	"	"	"	X
Surrogate recoveries:												
10386-84-2	*4,4-DB-Octafluorobiphenyl (Sr)*	*85*			*30-150 %*		"	"	"	"	"	
10386-84-2	*4,4-DB-Octafluorobiphenyl (Sr) [2C]*	*85*			*30-150 %*		"	"	"	"	"	
2051-24-3	*Decachlorobiphenyl (Sr)*	*85*			*30-150 %*		"	"	"	"	"	
2051-24-3	*Decachlorobiphenyl (Sr) [2C]*	*85*			*30-150 %*		"	"	"	"	"	
General Chemistry Parameters												
	% Solids	88.1		%		1	SM2540 G Mod.	13-May-10	13-May-10	VK	1010088	

DPW Project Number: BI-RT-843
Appendix #3
Addendum #6

Sample Identification	Client Project #	Matrix	Collection Date/Time	Received
NWSBA-Comp 10	176153.0000.0000	Soil	10-May-10 12:45	11-May-10
SB11920-33				

CAS No.	*Analyte(s)*	*Result*	*Flag*	*Units*	**RDL*	*Dilution*	*Method Ref.*	*Prepared*	*Analyzed*	*Analyst*	*Batch*	*Cert.*
Semivolatile Organic Compounds by GC												
Polychlorinated Biphenyls by SW846 8082 Prepared by method SW846 3540C												
12674-11-2	Aroclor-1016	BRL		µg/kg dry	22.5	1	SW846 8082	12-May-10	13-May-10	TG	1010001	X
11104-28-2	Aroclor-1221	BRL		µg/kg dry	22.5	1	"	"	"	"	"	X
11141-16-5	Aroclor-1232	BRL		µg/kg dry	22.5	1	"	"	"	"	"	X
53469-21-9	Aroclor-1242	BRL		µg/kg dry	22.5	1	"	"	"	"	"	X
12672-29-6	Aroclor-1248	BRL		µg/kg dry	22.5	1	"	"	"	"	"	X
11097-69-1	Aroclor-1254	179		µg/kg dry	22.5	1	"	"	"	"	"	X
11096-82-5	Aroclor-1260	77.2		µg/kg dry	22.5	1	"	"	"	"	"	X
37324-23-5	Aroclor-1262	BRL		µg/kg dry	22.5	1	"	"	"	"	"	X
11100-14-4	Aroclor-1268	BRL		µg/kg dry	22.5	1	"	"	"	"	"	X
Surrogate recoveries:												
10386-84-2	*4,4-DB-Octafluorobiphenyl (Sr)*	*85*			*30-150 %*		"	"	"	"	"	
10386-84-2	*4,4-DB-Octafluorobiphenyl (Sr) [2C]*	*80*			*30-150 %*		"	"	"	"	"	
2051-24-3	*Decachlorobiphenyl (Sr)*	*90*			*30-150 %*		"	"	"	"	"	
2051-24-3	*Decachlorobiphenyl (Sr) [2C]*	*85*			*30-150 %*		"	"	"	"	"	
General Chemistry Parameters												
	% Solids	87.8		%		1	SM2540 G Mod.	13-May-10	13-May-10	VK	1010088	

DPW Project Number: BI-RT-843
Appendix #3
Addendum #6

Sample Identification	Client Project #	Matrix	Collection Date/Time	Received
NWSBA-Comp 11	176153.0000.0000	Soil	10-May-10 12:55	11-May-10
SB11920-34				

CAS No.	Analyte(s)	Result	Flag	Units	*RDL	Dilution	Method Ref.	Prepared	Analyzed	Analyst	Batch	Cert.
Semivolatile Organic Compounds by GC												
Polychlorinated Biphenyls by SW846 8082 Prepared by method SW846 3540C												
12674-11-2	Aroclor-1016	BRL		µg/kg dry	22.7	1	SW846 8082	12-May-10	13-May-10	TG	1010001	X
11104-28-2	Aroclor-1221	BRL		µg/kg dry	22.7	1	"	"	"	"	"	X
11141-16-5	Aroclor-1232	BRL		µg/kg dry	22.7	1	"	"	"	"	"	X
53469-21-9	Aroclor-1242	BRL		µg/kg dry	22.7	1	"	"	"	"	"	X
12672-29-6	Aroclor-1248	BRL		µg/kg dry	22.7	1	"	"	"	"	"	X
11097-69-1	Aroclor-1254	6,360	E	µg/kg dry	22.7	1	"	"	"	"	"	X
11096-82-5	Aroclor-1260	1,190		µg/kg dry	22.7	1	"	"	"	"	"	X
37324-23-5	Aroclor-1262	BRL		µg/kg dry	22.7	1	"	"	"	"	"	X
11100-14-4	Aroclor-1268	BRL		µg/kg dry	22.7	1	"	"	"	"	"	X
Surrogate recoveries:												
10386-84-2	*4,4-DB-Octafluorobiphenyl (Sr)*	*75*			*30-150 %*		"	"	"	"	"	
10386-84-2	*4,4-DB-Octafluorobiphenyl (Sr) [2C]*	*75*			*30-150 %*		"	"	"	"	"	
2051-24-3	*Decachlorobiphenyl (Sr)*	*95*			*30-150 %*		"	"	"	"	"	
2051-24-3	*Decachlorobiphenyl (Sr) [2C]*	*80*			*30-150 %*		"	"	"	"	"	
Re-analysis of Polychlorinated Biphenyls by SW846 8082 Prepared by method SW846 3540C												
12674-11-2	Aroclor-1016	BRL		µg/kg dry	227	10	SW846 8082	12-May-10	14-May-10	TG	1010001	X
11104-28-2	Aroclor-1221	BRL		µg/kg dry	227	10	"	"	"	"	"	X
11141-16-5	Aroclor-1232	BRL		µg/kg dry	227	10	"	"	"	"	"	X
53469-21-9	Aroclor-1242	BRL		µg/kg dry	227	10	"	"	"	"	"	X
12672-29-6	Aroclor-1248	BRL		µg/kg dry	227	10	"	"	"	"	"	X
11097-69-1	Aroclor-1254	7,700		µg/kg dry	227	10	"	"	"	"	"	X
11096-82-5	Aroclor-1260	1,610		µg/kg dry	227	10	"	"	"	"	"	X
37324-23-5	Aroclor-1262	BRL		µg/kg dry	227	10	"	"	"	"	"	X
11100-14-4	Aroclor-1268	BRL		µg/kg dry	227	10	"	"	"	"	"	X
Surrogate recoveries:												
10386-84-2	*4,4-DB-Octafluorobiphenyl (Sr)*	*100*			*30-150 %*		"	"	"	"	"	
10386-84-2	*4,4-DB-Octafluorobiphenyl (Sr) [2C]*	*100*			*30-150 %*		"	"	"	"	"	
2051-24-3	*Decachlorobiphenyl (Sr)*	*100*			*30-150 %*		"	"	"	"	"	
2051-24-3	*Decachlorobiphenyl (Sr) [2C]*	*100*			*30-150 %*		"	"	"	"	"	
General Chemistry Parameters												
	% Solids	85.8		%		1	SM2540 G Mod.	13-May-10	13-May-10	VK	1010088	

DPW Project Number: BI-RT-843
Appendix #3
Addendum #6

Sample Identification	Client Project #	Matrix	Collection Date/Time	Received
NWSBA-Comp 12	176153.0000.0000	Soil	10-May-10 12:57	11-May-10
SB11920-35				

CAS No.	*Analyte(s)*	*Result*	*Flag*	*Units*	**RDL*	*Dilution*	*Method Ref.*	*Prepared*	*Analyzed*	*Analyst*	*Batch*	*Cert.*
Semivolatile Organic Compounds by GC												
Polychlorinated Biphenyls by SW846 8082 Prepared by method SW846 3540C												
12674-11-2	Aroclor-1016	BRL		µg/kg dry	22.9	1	SW846 8082	12-May-10	13-May-10	TG	1010001	X
11104-28-2	Aroclor-1221	BRL		µg/kg dry	22.9	1	"	"	"	"	"	X
11141-16-5	Aroclor-1232	BRL		µg/kg dry	22.9	1	"	"	"	"	"	X
53469-21-9	Aroclor-1242	BRL		µg/kg dry	22.9	1	"	"	"	"	"	X
12672-29-6	Aroclor-1248	BRL		µg/kg dry	22.9	1	"	"	"	"	"	X
11097-69-1	Aroclor-1254	1,470		µg/kg dry	22.9	1	"	"	"	"	"	X
11096-82-5	Aroclor-1260	479		µg/kg dry	22.9	1	"	"	"	"	"	X
37324-23-5	Aroclor-1262	BRL		µg/kg dry	22.9	1	"	"	"	"	"	X
11100-14-4	Aroclor-1268	BRL		µg/kg dry	22.9	1	"	"	"	"	"	X
Surrogate recoveries:												
10386-84-2	*4,4-DB-Octafluorobiphenyl (Sr)*	*75*			*30-150 %*		"	"	"	"	"	
10386-84-2	*4,4-DB-Octafluorobiphenyl (Sr) [2C]*	*75*			*30-150 %*		"	"	"	"	"	
2051-24-3	*Decachlorobiphenyl (Sr)*	*100*			*30-150 %*		"	"	"	"	"	
2051-24-3	*Decachlorobiphenyl (Sr) [2C]*	*85*			*30-150 %*		"	"	"	"	"	
General Chemistry Parameters												
	% Solids	85.4		%		1	SM2540 G Mod.	13-May-10	13-May-10	VK	1010088	

DPW Project Number: BI-RT-843
Appendix #3
Addendum #6

Sample Identification	Client Project #	Matrix	Collection Date/Time	Received
NWSBA-Comp 13	176153.0000.0000	Soil	10-May-10 13:03	11-May-10
SB11920-36				

CAS No.	*Analyte(s)*	*Result*	*Flag*	*Units*	**RDL*	*Dilution*	*Method Ref.*	*Prepared*	*Analyzed*	*Analyst*	*Batch*	*Cert.*
Semivolatile Organic Compounds by GC												
Polychlorinated Biphenyls by SW846 8082 Prepared by method SW846 3540C												
12674-11-2	Aroclor-1016	BRL		µg/kg dry	26.0	1	SW846 8082	12-May-10	13-May-10	TG	1010001	X
11104-28-2	Aroclor-1221	BRL		µg/kg dry	26.0	1	"	"	"	"	"	X
11141-16-5	Aroclor-1232	BRL		µg/kg dry	26.0	1	"	"	"	"	"	X
53469-21-9	Aroclor-1242	BRL		µg/kg dry	26.0	1	"	"	"	"	"	X
12672-29-6	Aroclor-1248	BRL		µg/kg dry	26.0	1	"	"	"	"	"	X
11097-69-1	Aroclor-1254	387		µg/kg dry	26.0	1	"	"	"	"	"	X
11096-82-5	Aroclor-1260	141		µg/kg dry	26.0	1	"	"	"	"	"	X
37324-23-5	Aroclor-1262	BRL		µg/kg dry	26.0	1	"	"	"	"	"	X
11100-14-4	Aroclor-1268	BRL		µg/kg dry	26.0	1	"	"	"	"	"	X
Surrogate recoveries:												
10386-84-2	*4,4-DB-Octafluorobiphenyl (Sr)*	*75*			*30-150 %*		"	"	"	"	"	
10386-84-2	*4,4-DB-Octafluorobiphenyl (Sr) [2C]*	*75*			*30-150 %*		"	"	"	"	"	
2051-24-3	*Decachlorobiphenyl (Sr)*	*95*			*30-150 %*		"	"	"	"	"	
2051-24-3	*Decachlorobiphenyl (Sr) [2C]*	*80*			*30-150 %*		"	"	"	"	"	
General Chemistry Parameters												
	% Solids	74.3		%		1	SM2540 G Mod.	13-May-10	13-May-10	VK	1010088	

DPW Project Number: BI-RT-843
Appendix #3
Addendum #6

Sample Identification	Client Project #	Matrix	Collection Date/Time	Received
NWSBA-Comp 14	176153.0000.0000	Soil	10-May-10 13:08	11-May-10
SB11920-37				

CAS No.	*Analyte(s)*	*Result*	*Flag*	*Units*	**RDL*	*Dilution*	*Method Ref.*	*Prepared*	*Analyzed*	*Analyst*	*Batch*	*Cert.*
Semivolatile Organic Compounds by GC												
Polychlorinated Biphenyls by SW846 8082 Prepared by method SW846 3540C												
12674-11-2	Aroclor-1016	BRL		µg/kg dry	29.4	1	SW846 8082	12-May-10	13-May-10	TG	1010001	X
11104-28-2	Aroclor-1221	BRL		µg/kg dry	29.4	1	"	"	"	"	"	X
11141-16-5	Aroclor-1232	BRL		µg/kg dry	29.4	1	"	"	"	"	"	X
53469-21-9	Aroclor-1242	BRL		µg/kg dry	29.4	1	"	"	"	"	"	X
12672-29-6	Aroclor-1248	BRL		µg/kg dry	29.4	1	"	"	"	"	"	X
11097-69-1	Aroclor-1254	868		µg/kg dry	29.4	1	"	"	"	"	"	X
11096-82-5	Aroclor-1260	380		µg/kg dry	29.4	1	"	"	"	"	"	X
37324-23-5	Aroclor-1262	BRL		µg/kg dry	29.4	1	"	"	"	"	"	X
11100-14-4	Aroclor-1268	BRL		µg/kg dry	29.4	1	"	"	"	"	"	X
Surrogate recoveries:												
10386-84-2	*4,4-DB-Octafluorobiphenyl (Sr)*	*70*			*30-150 %*		"	"	"	"	"	
10386-84-2	*4,4-DB-Octafluorobiphenyl (Sr) [2C]*	*70*			*30-150 %*		"	"	"	"	"	
2051-24-3	*Decachlorobiphenyl (Sr)*	*80*			*30-150 %*		"	"	"	"	"	
2051-24-3	*Decachlorobiphenyl (Sr) [2C]*	*75*			*30-150 %*		"	"	"	"	"	
General Chemistry Parameters												
	% Solids	66.5		%		1	SM2540 G Mod.	13-May-10	13-May-10	VK	1010088	

DPW Project Number: BI-RT-843
Appendix #3
Addendum #6

Sample Identification	Client Project #	Matrix	Collection Date/Time	Received
NWSBA-Comp 15	176153.0000.0000	Soil	10-May-10 13:14	11-May-10
SB11920-38				

CAS No.	*Analyte(s)*	*Result*	*Flag*	*Units*	**RDL*	*Dilution*	*Method Ref.*	*Prepared*	*Analyzed*	*Analyst*	*Batch*	*Cert.*
Semivolatile Organic Compounds by GC												
Polychlorinated Biphenyls by SW846 8082 Prepared by method SW846 3540C												
12674-11-2	Aroclor-1016	BRL		µg/kg dry	25.0	1	SW846 8082	12-May-10	13-May-10	TG	1010001	X
11104-28-2	Aroclor-1221	BRL		µg/kg dry	25.0	1	"	"	"	"	"	X
11141-16-5	Aroclor-1232	BRL		µg/kg dry	25.0	1	"	"	"	"	"	X
53469-21-9	Aroclor-1242	BRL		µg/kg dry	25.0	1	"	"	"	"	"	X
12672-29-6	Aroclor-1248	BRL		µg/kg dry	25.0	1	"	"	"	"	"	X
11097-69-1	Aroclor-1254	533		µg/kg dry	25.0	1	"	"	"	"	"	X
11096-82-5	Aroclor-1260	305		µg/kg dry	25.0	1	"	"	"	"	"	X
37324-23-5	Aroclor-1262	BRL		µg/kg dry	25.0	1	"	"	"	"	"	X
11100-14-4	Aroclor-1268	BRL		µg/kg dry	25.0	1	"	"	"	"	"	X
Surrogate recoveries:												
10386-84-2	*4,4-DB-Octafluorobiphenyl (Sr)*	*70*			*30-150 %*		"	"	"	"	"	
10386-84-2	*4,4-DB-Octafluorobiphenyl (Sr) [2C]*	*75*			*30-150 %*		"	"	"	"	"	
2051-24-3	*Decachlorobiphenyl (Sr)*	*90*			*30-150 %*		"	"	"	"	"	
2051-24-3	*Decachlorobiphenyl (Sr) [2C]*	*85*			*30-150 %*		"	"	"	"	"	
General Chemistry Parameters												
	% Solids	73.2		%		1	SM2540 G Mod.	13-May-10	13-May-10	VK	1010088	

DPW Project Number: BI-RT-843
Appendix #3
Addendum #6

Sample Identification	Client Project #	Matrix	Collection Date/Time	Received
NWSBA-Comp 16	176153.0000.0000	Soil	10-May-10 13:17	11-May-10
SB11920-39				

CAS No.	*Analyte(s)*	*Result*	*Flag*	*Units*	**RDL*	*Dilution*	*Method Ref.*	*Prepared*	*Analyzed*	*Analyst*	*Batch*	*Cert.*
Semivolatile Organic Compounds by GC												
Polychlorinated Biphenyls by SW846 8082 Prepared by method SW846 3540C												
12674-11-2	Aroclor-1016	BRL		µg/kg dry	25.0	1	SW846 8082	12-May-10	13-May-10	TG	1010001	X
11104-28-2	Aroclor-1221	BRL		µg/kg dry	25.0	1	"	"	"	"	"	X
11141-16-5	Aroclor-1232	BRL		µg/kg dry	25.0	1	"	"	"	"	"	X
53469-21-9	Aroclor-1242	BRL		µg/kg dry	25.0	1	"	"	"	"	"	X
12672-29-6	Aroclor-1248	BRL		µg/kg dry	25.0	1	"	"	"	"	"	X
11097-69-1	Aroclor-1254	1,000		µg/kg dry	25.0	1	"	"	"	"	"	X
11096-82-5	Aroclor-1260	363		µg/kg dry	25.0	1	"	"	"	"	"	X
37324-23-5	Aroclor-1262	BRL		µg/kg dry	25.0	1	"	"	"	"	"	X
11100-14-4	Aroclor-1268	BRL		µg/kg dry	25.0	1	"	"	"	"	"	X
Surrogate recoveries:												
10386-84-2	*4,4-DB-Octafluorobiphenyl (Sr)*	*75*			*30-150 %*		"	"	"	"	"	
10386-84-2	*4,4-DB-Octafluorobiphenyl (Sr) [2C]*	*80*			*30-150 %*		"	"	"	"	"	
2051-24-3	*Decachlorobiphenyl (Sr)*	*90*			*30-150 %*		"	"	"	"	"	
2051-24-3	*Decachlorobiphenyl (Sr) [2C]*	*85*			*30-150 %*		"	"	"	"	"	
General Chemistry Parameters												
	% Solids	75.3		%		1	SM2540 G Mod.	13-May-10	13-May-10	VK	1010088	

DPW Project Number: BI-RT-843
Appendix #3
Addendum #6

Sample Identification	Client Project #	Matrix	Collection Date/Time	Received
NWSBA-Comp 17	176153.0000.0000	Soil	10-May-10 13:20	11-May-10
SB11920-40				

CAS No.	*Analyte(s)*	*Result*	*Flag*	*Units*	**RDL*	*Dilution*	*Method Ref.*	*Prepared*	*Analyzed*	*Analyst*	*Batch*	*Cert.*
Semivolatile Organic Compounds by GC												
Polychlorinated Biphenyls by SW846 8082 Prepared by method SW846 3540C												
12674-11-2	Aroclor-1016	BRL		µg/kg dry	25.9	1	SW846 8082	12-May-10	13-May-10	TG	1010001	X
11104-28-2	Aroclor-1221	BRL		µg/kg dry	25.9	1	"	"	"	"	"	X
11141-16-5	Aroclor-1232	BRL		µg/kg dry	25.9	1	"	"	"	"	"	X
53469-21-9	Aroclor-1242	BRL		µg/kg dry	25.9	1	"	"	"	"	"	X
12672-29-6	Aroclor-1248	BRL		µg/kg dry	25.9	1	"	"	"	"	"	X
11097-69-1	Aroclor-1254	562		µg/kg dry	25.9	1	"	"	"	"	"	X
11096-82-5	Aroclor-1260	354		µg/kg dry	25.9	1	"	"	"	"	"	X
37324-23-5	Aroclor-1262	BRL		µg/kg dry	25.9	1	"	"	"	"	"	X
11100-14-4	Aroclor-1268	BRL		µg/kg dry	25.9	1	"	"	"	"	"	X
Surrogate recoveries:												
10386-84-2	*4,4-DB-Octafluorobiphenyl (Sr)*	*75*			*30-150 %*		"	"	"	"	"	
10386-84-2	*4,4-DB-Octafluorobiphenyl (Sr) [2C]*	*75*			*30-150 %*		"	"	"	"	"	
2051-24-3	*Decachlorobiphenyl (Sr)*	*95*			*30-150 %*		"	"	"	"	"	
2051-24-3	*Decachlorobiphenyl (Sr) [2C]*	*85*			*30-150 %*		"	"	"	"	"	
General Chemistry Parameters												
	% Solids	75.8		%		1	SM2540 G Mod.	13-May-10	13-May-10	VK	1010088	

DPW Project Number: BI-RT-843
Appendix #3
Addendum #6

Sample Identification	Client Project #	Matrix	Collection Date/Time	Received
NWSBA-Comp 18	176153.0000.0000	Soil	10-May-10 13:25	11-May-10
SB11920-41				

CAS No.	*Analyte(s)*	*Result*	*Flag*	*Units*	**RDL*	*Dilution*	*Method Ref.*	*Prepared*	*Analyzed*	*Analyst*	*Batch*	*Cert.*
Semivolatile Organic Compounds by GC												
Polychlorinated Biphenyls by SW846 8082 Prepared by method SW846 3540C												
12674-11-2	Aroclor-1016	BRL		µg/kg dry	24.9	1	SW846 8082	12-May-10	13-May-10	TG	1010001	X
11104-28-2	Aroclor-1221	BRL		µg/kg dry	24.9	1	"	"	"	"	"	X
11141-16-5	Aroclor-1232	BRL		µg/kg dry	24.9	1	"	"	"	"	"	X
53469-21-9	Aroclor-1242	BRL		µg/kg dry	24.9	1	"	"	"	"	"	X
12672-29-6	Aroclor-1248	BRL		µg/kg dry	24.9	1	"	"	"	"	"	X
11097-69-1	Aroclor-1254	462		µg/kg dry	24.9	1	"	"	"	"	"	X
11096-82-5	Aroclor-1260	134		µg/kg dry	24.9	1	"	"	"	"	"	X
37324-23-5	Aroclor-1262	BRL		µg/kg dry	24.9	1	"	"	"	"	"	X
11100-14-4	Aroclor-1268	BRL		µg/kg dry	24.9	1	"	"	"	"	"	X
Surrogate recoveries:												
10386-84-2	*4,4-DB-Octafluorobiphenyl (Sr)*	*75*			*30-150 %*		"	"	"	"	"	
10386-84-2	*4,4-DB-Octafluorobiphenyl (Sr) [2C]*	*75*			*30-150 %*		"	"	"	"	"	
2051-24-3	*Decachlorobiphenyl (Sr)*	*90*			*30-150 %*		"	"	"	"	"	
2051-24-3	*Decachlorobiphenyl (Sr) [2C]*	*80*			*30-150 %*		"	"	"	"	"	
General Chemistry Parameters												
	% Solids	77.4		%		1	SM2540 G Mod.	13-May-10	13-May-10	VK	1010088	

DPW Project Number: BI-RT-843
Appendix #3
Addendum #6

Sample Identification	Client Project #	Matrix	Collection Date/Time	Received
NWSBA-Comp 19	176153.0000.0000	Soil	10-May-10 13:29	11-May-10
SB11920-42				

CAS No.	*Analyte(s)*	*Result*	*Flag*	*Units*	**RDL*	*Dilution*	*Method Ref.*	*Prepared*	*Analyzed*	*Analyst*	*Batch*	*Cert.*
Semivolatile Organic Compounds by GC												
Polychlorinated Biphenyls by SW846 8082 Prepared by method SW846 3540C												
12674-11-2	Aroclor-1016	BRL		µg/kg dry	25.6	1	SW846 8082	12-May-10	13-May-10	TG	1010002	X
11104-28-2	Aroclor-1221	BRL		µg/kg dry	25.6	1	"	"	"	"	"	X
11141-16-5	Aroclor-1232	BRL		µg/kg dry	25.6	1	"	"	"	"	"	X
53469-21-9	Aroclor-1242	BRL		µg/kg dry	25.6	1	"	"	"	"	"	X
12672-29-6	Aroclor-1248	BRL		µg/kg dry	25.6	1	"	"	"	"	"	X
11097-69-1	Aroclor-1254	191		µg/kg dry	25.6	1	"	"	"	"	"	X
11096-82-5	Aroclor-1260	115		µg/kg dry	25.6	1	"	"	"	"	"	X
37324-23-5	Aroclor-1262	BRL		µg/kg dry	25.6	1	"	"	"	"	"	X
11100-14-4	Aroclor-1268	BRL		µg/kg dry	25.6	1	"	"	"	"	"	X
Surrogate recoveries:												
10386-84-2	*4,4-DB-Octafluorobiphenyl (Sr)*	*80*			*30-150 %*		"	"	"	"	"	
10386-84-2	*4,4-DB-Octafluorobiphenyl (Sr) [2C]*	*90*			*30-150 %*		"	"	"	"	"	
2051-24-3	*Decachlorobiphenyl (Sr)*	*100*			*30-150 %*		"	"	"	"	"	
2051-24-3	*Decachlorobiphenyl (Sr) [2C]*	*90*			*30-150 %*		"	"	"	"	"	
General Chemistry Parameters												
	% Solids	75.3		%		1	SM2540 G Mod.	13-May-10	13-May-10	VK	1010089	

DPW Project Number: BI-RT-843
Appendix #3
Addendum #6

Sample Identification	Client Project #	Matrix	Collection Date/Time	Received
NWSBA-Comp 20	176153.0000.0000	Soil	10-May-10 13:34	11-May-10
SB11920-43				

CAS No.	*Analyte(s)*	*Result*	*Flag*	*Units*	**RDL*	*Dilution*	*Method Ref.*	*Prepared*	*Analyzed*	*Analyst*	*Batch*	*Cert.*
Semivolatile Organic Compounds by GC												
Polychlorinated Biphenyls by SW846 8082 Prepared by method SW846 3540C												
12674-11-2	Aroclor-1016	BRL		µg/kg dry	26.1	1	SW846 8082	12-May-10	13-May-10	TG	1010002	X
11104-28-2	Aroclor-1221	BRL		µg/kg dry	26.1	1	"	"	"	"	"	X
11141-16-5	Aroclor-1232	BRL		µg/kg dry	26.1	1	"	"	"	"	"	X
53469-21-9	Aroclor-1242	BRL		µg/kg dry	26.1	1	"	"	"	"	"	X
12672-29-6	Aroclor-1248	BRL		µg/kg dry	26.1	1	"	"	"	"	"	X
11097-69-1	Aroclor-1254	503		µg/kg dry	26.1	1	"	"	"	"	"	X
11096-82-5	Aroclor-1260	290		µg/kg dry	26.1	1	"	"	"	"	"	X
37324-23-5	Aroclor-1262	BRL		µg/kg dry	26.1	1	"	"	"	"	"	X
11100-14-4	Aroclor-1268	BRL		µg/kg dry	26.1	1	"	"	"	"	"	X
Surrogate recoveries:												
10386-84-2	*4,4-DB-Octafluorobiphenyl (Sr)*	*80*			*30-150 %*		"	"	"	"	"	
10386-84-2	*4,4-DB-Octafluorobiphenyl (Sr) [2C]*	*85*			*30-150 %*		"	"	"	"	"	
2051-24-3	*Decachlorobiphenyl (Sr)*	*100*			*30-150 %*		"	"	"	"	"	
2051-24-3	*Decachlorobiphenyl (Sr) [2C]*	*85*			*30-150 %*		"	"	"	"	"	
General Chemistry Parameters												
	% Solids	75.5		%		1	SM2540 G Mod.	13-May-10	13-May-10	VK	1010089	

DPW Project Number: BI-RT-843
Appendix #3
Addendum #6

Sample Identification	Client Project #	Matrix	Collection Date/Time	Received
NWSBA-Comp 21	176153.0000.0000	Soil	10-May-10 13:40	11-May-10
SB11920-44				

CAS No.	*Analyte(s)*	*Result*	*Flag*	*Units*	**RDL*	*Dilution*	*Method Ref.*	*Prepared*	*Analyzed*	*Analyst*	*Batch*	*Cert.*
Semivolatile Organic Compounds by GC												
Polychlorinated Biphenyls by SW846 8082 Prepared by method SW846 3540C												
12674-11-2	Aroclor-1016	BRL		µg/kg dry	25.0	1	SW846 8082	12-May-10	13-May-10	TG	1010002	X
11104-28-2	Aroclor-1221	BRL		µg/kg dry	25.0	1	"	"	"	"	"	X
11141-16-5	Aroclor-1232	BRL		µg/kg dry	25.0	1	"	"	"	"	"	X
53469-21-9	Aroclor-1242	BRL		µg/kg dry	25.0	1	"	"	"	"	"	X
12672-29-6	Aroclor-1248	BRL		µg/kg dry	25.0	1	"	"	"	"	"	X
11097-69-1	Aroclor-1254	127		µg/kg dry	25.0	1	"	"	"	"	"	X
11096-82-5	Aroclor-1260	94.6		µg/kg dry	25.0	1	"	"	"	"	"	X
37324-23-5	Aroclor-1262	BRL		µg/kg dry	25.0	1	"	"	"	"	"	X
11100-14-4	Aroclor-1268	BRL		µg/kg dry	25.0	1	"	"	"	"	"	X
Surrogate recoveries:												
10386-84-2	*4,4-DB-Octafluorobiphenyl (Sr)*	*80*			*30-150 %*		"	"	"	"	"	
10386-84-2	*4,4-DB-Octafluorobiphenyl (Sr) [2C]*	*85*			*30-150 %*		"	"	"	"	"	
2051-24-3	*Decachlorobiphenyl (Sr)*	*95*			*30-150 %*		"	"	"	"	"	
2051-24-3	*Decachlorobiphenyl (Sr) [2C]*	*90*			*30-150 %*		"	"	"	"	"	
General Chemistry Parameters												
	% Solids	74.1		%		1	SM2540 G Mod.	13-May-10	13-May-10	VK	1010089	

DPW Project Number: BI-RT-843
Appendix #3
Addendum #6

Sample Identification	Client Project #	Matrix	Collection Date/Time	Received
NWSBA-Comp 22	176153.0000.0000	Soil	10-May-10 13:46	11-May-10
SB11920-45				

CAS No.	*Analyte(s)*	*Result*	*Flag*	*Units*	**RDL*	*Dilution*	*Method Ref.*	*Prepared*	*Analyzed*	*Analyst*	*Batch*	*Cert.*
Semivolatile Organic Compounds by GC												
Polychlorinated Biphenyls by SW846 8082 Prepared by method SW846 3540C												
12674-11-2	Aroclor-1016	BRL		µg/kg dry	26.9	1	SW846 8082	12-May-10	14-May-10	TG	1010002	X
11104-28-2	Aroclor-1221	BRL		µg/kg dry	26.9	1	"	"	"	"	"	X
11141-16-5	Aroclor-1232	BRL		µg/kg dry	26.9	1	"	"	"	"	"	X
53469-21-9	Aroclor-1242	BRL		µg/kg dry	26.9	1	"	"	"	"	"	X
12672-29-6	Aroclor-1248	BRL		µg/kg dry	26.9	1	"	"	"	"	"	X
11097-69-1	Aroclor-1254	346		µg/kg dry	26.9	1	"	"	"	"	"	X
11096-82-5	Aroclor-1260	293		µg/kg dry	26.9	1	"	"	"	"	"	X
37324-23-5	Aroclor-1262	BRL		µg/kg dry	26.9	1	"	"	"	"	"	X
11100-14-4	Aroclor-1268	BRL		µg/kg dry	26.9	1	"	"	"	"	"	X
Surrogate recoveries:												
10386-84-2	*4,4-DB-Octafluorobiphenyl (Sr)*	*85*			*30-150 %*		"	"	"	"	"	
10386-84-2	*4,4-DB-Octafluorobiphenyl (Sr) [2C]*	*90*			*30-150 %*		"	"	"	"	"	
2051-24-3	*Decachlorobiphenyl (Sr)*	*110*			*30-150 %*		"	"	"	"	"	
2051-24-3	*Decachlorobiphenyl (Sr) [2C]*	*90*			*30-150 %*		"	"	"	"	"	
General Chemistry Parameters												
	% Solids	72.5		%		1	SM2540 G Mod.	13-May-10	13-May-10	VK	1010089	

DPW Project Number: BI-RT-843
Appendix #3
Addendum #6

Sample Identification	Client Project #	Matrix	Collection Date/Time	Received
NWSBA-Comp 23	176153.0000.0000	Soil	10-May-10 13:50	11-May-10
SB11920-46				

CAS No.	*Analyte(s)*	*Result*	*Flag*	*Units*	**RDL*	*Dilution*	*Method Ref.*	*Prepared*	*Analyzed*	*Analyst*	*Batch*	*Cert.*
Semivolatile Organic Compounds by GC												
Polychlorinated Biphenyls by SW846 8082 Prepared by method SW846 3540C												
12674-11-2	Aroclor-1016	BRL		µg/kg dry	25.8	1	SW846 8082	12-May-10	14-May-10	TG	1010002	X
11104-28-2	Aroclor-1221	BRL		µg/kg dry	25.8	1	"	"	"	"	"	X
11141-16-5	Aroclor-1232	BRL		µg/kg dry	25.8	1	"	"	"	"	"	X
53469-21-9	Aroclor-1242	BRL		µg/kg dry	25.8	1	"	"	"	"	"	X
12672-29-6	Aroclor-1248	BRL		µg/kg dry	25.8	1	"	"	"	"	"	X
11097-69-1	Aroclor-1254	461		µg/kg dry	25.8	1	"	"	"	"	"	X
11096-82-5	Aroclor-1260	179		µg/kg dry	25.8	1	"	"	"	"	"	X
37324-23-5	Aroclor-1262	BRL		µg/kg dry	25.8	1	"	"	"	"	"	X
11100-14-4	Aroclor-1268	BRL		µg/kg dry	25.8	1	"	"	"	"	"	X
Surrogate recoveries:												
10386-84-2	*4,4-DB-Octafluorobiphenyl (Sr)*	*50*			*30-150 %*		"	"	"	"	"	
10386-84-2	*4,4-DB-Octafluorobiphenyl (Sr) [2C]*	*50*			*30-150 %*		"	"	"	"	"	
2051-24-3	*Decachlorobiphenyl (Sr)*	*100*			*30-150 %*		"	"	"	"	"	
2051-24-3	*Decachlorobiphenyl (Sr) [2C]*	*50*			*30-150 %*		"	"	"	"	"	
General Chemistry Parameters												
	% Solids	74.8		%		1	SM2540 G Mod.	13-May-10	13-May-10	VK	1010089	

DPW Project Number: BI-RT-843
Appendix #3
Addendum #6

Sample Identification	Client Project #	Matrix	Collection Date/Time	Received
NWSBA-Comp 24	176153.0000.0000	Soil	10-May-10 13:55	11-May-10
SB11920-47				

CAS No.	*Analyte(s)*	*Result*	*Flag*	*Units*	**RDL*	*Dilution*	*Method Ref.*	*Prepared*	*Analyzed*	*Analyst*	*Batch*	*Cert.*
Semivolatile Organic Compounds by GC												
Polychlorinated Biphenyls by SW846 8082 Prepared by method SW846 3540C												
12674-11-2	Aroclor-1016	BRL		µg/kg dry	21.1	1	SW846 8082	12-May-10	14-May-10	TG	1010002	X
11104-28-2	Aroclor-1221	BRL		µg/kg dry	21.1	1	"	"	"	"	"	X
11141-16-5	Aroclor-1232	BRL		µg/kg dry	21.1	1	"	"	"	"	"	X
53469-21-9	Aroclor-1242	BRL		µg/kg dry	21.1	1	"	"	"	"	"	X
12672-29-6	Aroclor-1248	BRL		µg/kg dry	21.1	1	"	"	"	"	"	X
11097-69-1	Aroclor-1254	227		µg/kg dry	21.1	1	"	"	"	"	"	X
11096-82-5	Aroclor-1260	65.7		µg/kg dry	21.1	1	"	"	"	"	"	X
37324-23-5	Aroclor-1262	BRL		µg/kg dry	21.1	1	"	"	"	"	"	X
11100-14-4	Aroclor-1268	BRL		µg/kg dry	21.1	1	"	"	"	"	"	X
Surrogate recoveries:												
10386-84-2	*4,4-DB-Octafluorobiphenyl (Sr)*	*50*			*30-150 %*		"	"	"	"	"	
10386-84-2	*4,4-DB-Octafluorobiphenyl (Sr) [2C]*	*50*			*30-150 %*		"	"	"	"	"	
2051-24-3	*Decachlorobiphenyl (Sr)*	*100*			*30-150 %*		"	"	"	"	"	
2051-24-3	*Decachlorobiphenyl (Sr) [2C]*	*50*			*30-150 %*		"	"	"	"	"	
General Chemistry Parameters												
	% Solids	86.8		%		1	SM2540 G Mod.	13-May-10	13-May-10	VK	1010089	

DPW Project Number: BI-RT-843
Appendix #3
Addendum #6

Sample Identification	Client Project #	Matrix	Collection Date/Time	Received
NWSBA-Comp 25	176153.0000.0000	Soil	10-May-10 14:00	11-May-10
SB11920-48				

CAS No.	*Analyte(s)*	*Result*	*Flag*	*Units*	**RDL*	*Dilution*	*Method Ref.*	*Prepared*	*Analyzed*	*Analyst*	*Batch*	*Cert.*
Semivolatile Organic Compounds by GC												
Polychlorinated Biphenyls by SW846 8082 Prepared by method SW846 3540C												
12674-11-2	Aroclor-1016	BRL		µg/kg dry	22.7	1	SW846 8082	12-May-10	14-May-10	TG	1010002	X
11104-28-2	Aroclor-1221	BRL		µg/kg dry	22.7	1	"	"	"	"	"	X
11141-16-5	Aroclor-1232	BRL		µg/kg dry	22.7	1	"	"	"	"	"	X
53469-21-9	Aroclor-1242	BRL		µg/kg dry	22.7	1	"	"	"	"	"	X
12672-29-6	Aroclor-1248	BRL		µg/kg dry	22.7	1	"	"	"	"	"	X
11097-69-1	Aroclor-1254	228		µg/kg dry	22.7	1	"	"	"	"	"	X
11096-82-5	Aroclor-1260	74.6		µg/kg dry	22.7	1	"	"	"	"	"	X
37324-23-5	Aroclor-1262	BRL		µg/kg dry	22.7	1	"	"	"	"	"	X
11100-14-4	Aroclor-1268	BRL		µg/kg dry	22.7	1	"	"	"	"	"	X
Surrogate recoveries:												
10386-84-2	*4,4-DB-Octafluorobiphenyl (Sr)*	*85*			*30-150 %*		"	"	"	"	"	
10386-84-2	*4,4-DB-Octafluorobiphenyl (Sr) [2C]*	*90*			*30-150 %*		"	"	"	"	"	
2051-24-3	*Decachlorobiphenyl (Sr)*	*105*			*30-150 %*		"	"	"	"	"	
2051-24-3	*Decachlorobiphenyl (Sr) [2C]*	*85*			*30-150 %*		"	"	"	"	"	
General Chemistry Parameters												
	% Solids	88.0		%		1	SM2540 G Mod.	13-May-10	13-May-10	VK	1010089	

DPW Project Number: BI-RT-843
Appendix #3
Addendum #6

Sample Identification	Client Project #	Matrix	Collection Date/Time	Received
NWSBA-Comp 26	176153.0000.0000	Soil	10-May-10 13:00	11-May-10
SB11920-49				

CAS No.	Analyte(s)	Result	Flag	Units	*RDL	Dilution	Method Ref.	Prepared	Analyzed	Analyst	Batch	Cert.
Semivolatile Organic Compounds by GC												
Polychlorinated Biphenyls by SW846 8082 Prepared by method SW846 3540C												
12674-11-2	Aroclor-1016	BRL		µg/kg dry	23.3	1	SW846 8082	12-May-10	14-May-10	TG	1010002	X
11104-28-2	Aroclor-1221	BRL		µg/kg dry	23.3	1	"	"	"	"	"	X
11141-16-5	Aroclor-1232	BRL		µg/kg dry	23.3	1	"	"	"	"	"	X
53469-21-9	Aroclor-1242	BRL		µg/kg dry	23.3	1	"	"	"	"	"	X
12672-29-6	Aroclor-1248	BRL		µg/kg dry	23.3	1	"	"	"	"	"	X
11097-69-1	Aroclor-1254	5,920	E	µg/kg dry	23.3	1	"	"	"	"	"	X
11096-82-5	Aroclor-1260	1,210		µg/kg dry	23.3	1	"	"	"	"	"	X
37324-23-5	Aroclor-1262	BRL		µg/kg dry	23.3	1	"	"	"	"	"	X
11100-14-4	Aroclor-1268	BRL		µg/kg dry	23.3	1	"	"	"	"	"	X
Surrogate recoveries:												
10386-84-2	*4,4-DB-Octafluorobiphenyl (Sr)*	*85*			*30-150 %*		"	"	"	"	"	
10386-84-2	*4,4-DB-Octafluorobiphenyl (Sr) [2C]*	*90*			*30-150 %*		"	"	"	"	"	
2051-24-3	*Decachlorobiphenyl (Sr)*	*95*			*30-150 %*		"	"	"	"	"	
2051-24-3	*Decachlorobiphenyl (Sr) [2C]*	*85*			*30-150 %*		"	"	"	"	"	
Re-analysis of Polychlorinated Biphenyls by SW846 8082 Prepared by method SW846 3540C												
12674-11-2	Aroclor-1016	BRL		µg/kg dry	233	10	SW846 8082	12-May-10	14-May-10	TG	1010002	X
11104-28-2	Aroclor-1221	BRL		µg/kg dry	233	10	"	"	"	"	"	X
11141-16-5	Aroclor-1232	BRL		µg/kg dry	233	10	"	"	"	"	"	X
53469-21-9	Aroclor-1242	BRL		µg/kg dry	233	10	"	"	"	"	"	X
12672-29-6	Aroclor-1248	BRL		µg/kg dry	233	10	"	"	"	"	"	X
11097-69-1	Aroclor-1254	6,820		µg/kg dry	233	10	"	"	"	"	"	X
11096-82-5	Aroclor-1260	1,310		µg/kg dry	233	10	"	"	"	"	"	X
37324-23-5	Aroclor-1262	BRL		µg/kg dry	233	10	"	"	"	"	"	X
11100-14-4	Aroclor-1268	BRL		µg/kg dry	233	10	"	"	"	"	"	X
Surrogate recoveries:												
10386-84-2	*4,4-DB-Octafluorobiphenyl (Sr)*	*100*			*30-150 %*		"	"	"	"	"	
10386-84-2	*4,4-DB-Octafluorobiphenyl (Sr) [2C]*	*150*			*30-150 %*		"	"	"	"	"	
2051-24-3	*Decachlorobiphenyl (Sr)*	*100*			*30-150 %*		"	"	"	"	"	
2051-24-3	*Decachlorobiphenyl (Sr) [2C]*	*100*			*30-150 %*		"	"	"	"	"	
General Chemistry Parameters												
	% Solids	85.4		%		1	SM2540 G Mod.	13-May-10	13-May-10	VK	1010089	

DPW Project Number: BI-RT-843
Appendix #3
Addendum #6

Semivolatile Organic Compounds by GC - Quality Control

Analyte(s)	Result	Flag	Units	*RDL	Spike Level	Source Result	%REC	%REC Limits	RPD	RPD Limit
Batch 1010000 - SW846 3540C										
Blank (1010000-BLK1)					Prepared: 12-May-10	Analyzed: 13-May-10				
Aroclor-1016	BRL		µg/kg wet	20.0						
Aroclor-1016 [2C]	BRL		µg/kg wet	20.0						
Aroclor-1221	BRL		µg/kg wet	20.0						
Aroclor-1221 [2C]	BRL		µg/kg wet	20.0						
Aroclor-1232	BRL		µg/kg wet	20.0						
Aroclor-1232 [2C]	BRL		µg/kg wet	20.0						
Aroclor-1242	BRL		µg/kg wet	20.0						
Aroclor-1242 [2C]	BRL		µg/kg wet	20.0						
Aroclor-1248	BRL		µg/kg wet	20.0						
Aroclor-1248 [2C]	BRL		µg/kg wet	20.0						
Aroclor-1254	BRL		µg/kg wet	20.0						
Aroclor-1254 [2C]	BRL		µg/kg wet	20.0						
Aroclor-1260	BRL		µg/kg wet	20.0						
Aroclor-1260 [2C]	BRL		µg/kg wet	20.0						
Aroclor-1262	BRL		µg/kg wet	20.0						
Aroclor-1262 [2C]	BRL		µg/kg wet	20.0						
Aroclor-1268	BRL		µg/kg wet	20.0						
Aroclor-1268 [2C]	BRL		µg/kg wet	20.0						
Surrogate: 4,4-DB-Octafluorobiphenyl (Sr)	*14.0*		µg/kg wet		*20.0*		*70*	*30-150*		
Surrogate: 4,4-DB-Octafluorobiphenyl (Sr) [2C]	*15.0*		µg/kg wet		*20.0*		*75*	*30-150*		
Surrogate: Decachlorobiphenyl (Sr)	*16.0*		µg/kg wet		*20.0*		*80*	*30-150*		
Surrogate: Decachlorobiphenyl (Sr) [2C]	*16.0*		µg/kg wet		*20.0*		*80*	*30-150*		
LCS (1010000-BS1)					Prepared: 12-May-10	Analyzed: 13-May-10				
Aroclor-1016	190		µg/kg wet	20.0	250		76	50-140		
Aroclor-1016 [2C]	201		µg/kg wet	20.0	250		81	50-140		
Aroclor-1260	215		µg/kg wet	20.0	250		86	50-140		
Aroclor-1260 [2C]	207		µg/kg wet	20.0	250		83	50-140		
Surrogate: 4,4-DB-Octafluorobiphenyl (Sr)	*9.00*		µg/kg wet		*20.0*		*45*	*30-150*		
Surrogate: 4,4-DB-Octafluorobiphenyl (Sr) [2C]	*9.00*		µg/kg wet		*20.0*		*45*	*30-150*		
Surrogate: Decachlorobiphenyl (Sr)	*10.0*		µg/kg wet		*20.0*		*50*	*30-150*		
Surrogate: Decachlorobiphenyl (Sr) [2C]	*9.00*		µg/kg wet		*20.0*		*45*	*30-150*		
LCS Dup (1010000-BSD1)					Prepared: 12-May-10	Analyzed: 13-May-10				
Aroclor-1016	184		µg/kg wet	20.0	250		74	50-140	3	30
Aroclor-1016 [2C]	197		µg/kg wet	20.0	250		79	50-140	2	30
Aroclor-1260	212		µg/kg wet	20.0	250		85	50-140	1	30
Aroclor-1260 [2C]	206		µg/kg wet	20.0	250		83	50-140	0.2	30
Surrogate: 4,4-DB-Octafluorobiphenyl (Sr)	*8.00*		µg/kg wet		*20.0*		*40*	*30-150*		
Surrogate: 4,4-DB-Octafluorobiphenyl (Sr) [2C]	*8.00*		µg/kg wet		*20.0*		*40*	*30-150*		
Surrogate: Decachlorobiphenyl (Sr)	*10.0*		µg/kg wet		*20.0*		*50*	*30-150*		
Surrogate: Decachlorobiphenyl (Sr) [2C]	*10.0*		µg/kg wet		*20.0*		*50*	*30-150*		
Duplicate (1010000-DUP1)			**Source: SB11920-21**		Prepared: 12-May-10	Analyzed: 13-May-10				
Aroclor-1016	BRL		µg/kg dry	24.3		BRL				40
Aroclor-1221	BRL		µg/kg dry	24.3		BRL				40
Aroclor-1232	BRL		µg/kg dry	24.3		BRL				40
Aroclor-1242	BRL		µg/kg dry	24.3		BRL				40
Aroclor-1248	BRL		µg/kg dry	24.3		BRL				40
Aroclor-1254 [2C]	11.1	J	µg/kg dry	24.3		11.1			0.002	40
Aroclor-1260	15.3	J	µg/kg dry	24.3		BRL				40

Semivolatile Organic Compounds by GC - Quality Control

Analyte(s)	Result	Flag	Units	*RDL	Spike Level	Source Result	%REC	%REC Limits	RPD	RPD Limit
Batch 1010000 - SW846 3540C										
Duplicate (1010000-DUP1)			**Source: SB11920-21**		Prepared: 12-May-10		Analyzed: 13-May-10			
Aroclor-1262	BRL		µg/kg dry	24.3		BRL				40
Aroclor-1268	BRL		µg/kg dry	24.3		BRL				40
Surrogate: 4,4-DB-Octafluorobiphenyl (Sr)	*18.2*		µg/kg dry		*24.3*		*75*	*30-150*		
Surrogate: 4,4-DB-Octafluorobiphenyl (Sr) [2C]	*19.5*		µg/kg dry		*24.3*		*80*	*30-150*		
Surrogate: Decachlorobiphenyl (Sr)	*26.7*		µg/kg dry		*24.3*		*110*	*30-150*		
Surrogate: Decachlorobiphenyl (Sr) [2C]	*20.7*		µg/kg dry		*24.3*		*85*	*30-150*		
Matrix Spike (1010000-MS1)			**Source: SB11920-21**		Prepared: 12-May-10		Analyzed: 13-May-10			
Aroclor-1016	229		µg/kg dry	25.2	315	BRL	73	40-135		
Aroclor-1260	286		µg/kg dry	25.2	315	BRL	91	40-135		
Surrogate: 4,4-DB-Octafluorobiphenyl (Sr)	*18.9*		µg/kg dry		*25.2*		*75*	*30-150*		
Surrogate: 4,4-DB-Octafluorobiphenyl (Sr) [2C]	*18.9*		µg/kg dry		*25.2*		*75*	*30-150*		
Surrogate: Decachlorobiphenyl (Sr)	*26.4*		µg/kg dry		*25.2*		*105*	*30-150*		
Surrogate: Decachlorobiphenyl (Sr) [2C]	*20.1*		µg/kg dry		*25.2*		*80*	*30-150*		
Matrix Spike Dup (1010000-MSD1)			**Source: SB11920-21**		Prepared: 12-May-10		Analyzed: 13-May-10			
Aroclor-1016	220		µg/kg dry	24.4	304	BRL	72	40-135	0.7	30
Aroclor-1260	263		µg/kg dry	24.4	304	BRL	86	40-135	5	30
Surrogate: 4,4-DB-Octafluorobiphenyl (Sr)	*18.3*		µg/kg dry		*24.4*		*75*	*30-150*		
Surrogate: 4,4-DB-Octafluorobiphenyl (Sr) [2C]	*18.3*		µg/kg dry		*24.4*		*75*	*30-150*		
Surrogate: Decachlorobiphenyl (Sr)	*25.6*		µg/kg dry		*24.4*		*105*	*30-150*		
Surrogate: Decachlorobiphenyl (Sr) [2C]	*19.5*		µg/kg dry		*24.4*		*80*	*30-150*		
Batch 1010001 - SW846 3540C										
Blank (1010001-BLK1)					Prepared: 12-May-10		Analyzed: 14-May-10			
Aroclor-1016	BRL		µg/kg wet	20.0						
Aroclor-1016 [2C]	BRL		µg/kg wet	20.0						
Aroclor-1221	BRL		µg/kg wet	20.0						
Aroclor-1221 [2C]	BRL		µg/kg wet	20.0						
Aroclor-1232	BRL		µg/kg wet	20.0						
Aroclor-1232 [2C]	BRL		µg/kg wet	20.0						
Aroclor-1242	BRL		µg/kg wet	20.0						
Aroclor-1242 [2C]	BRL		µg/kg wet	20.0						
Aroclor-1248	BRL		µg/kg wet	20.0						
Aroclor-1248 [2C]	BRL		µg/kg wet	20.0						
Aroclor-1254	BRL		µg/kg wet	20.0						
Aroclor-1254 [2C]	BRL		µg/kg wet	20.0						
Aroclor-1260	BRL		µg/kg wet	20.0						
Aroclor-1260 [2C]	BRL		µg/kg wet	20.0						
Aroclor-1262	BRL		µg/kg wet	20.0						
Aroclor-1262 [2C]	BRL		µg/kg wet	20.0						
Aroclor-1268	BRL		µg/kg wet	20.0						
Aroclor-1268 [2C]	BRL		µg/kg wet	20.0						
Surrogate: 4,4-DB-Octafluorobiphenyl (Sr)	*15.0*		µg/kg wet		*20.0*		*75*	*30-150*		
Surrogate: 4,4-DB-Octafluorobiphenyl (Sr) [2C]	*15.0*		µg/kg wet		*20.0*		*75*	*30-150*		
Surrogate: Decachlorobiphenyl (Sr)	*16.0*		µg/kg wet		*20.0*		*80*	*30-150*		
Surrogate: Decachlorobiphenyl (Sr) [2C]	*17.0*		µg/kg wet		*20.0*		*85*	*30-150*		
LCS (1010001-BS1)					Prepared: 12-May-10		Analyzed: 14-May-10			
Aroclor-1016	223		µg/kg wet	20.0	250		89	50-140		
Aroclor-1016 [2C]	225		µg/kg wet	20.0	250		90	50-140		

Semivolatile Organic Compounds by GC - Quality Control

Analyte(s)	Result	Flag	Units	*RDL	Spike Level	Source Result	%REC	%REC Limits	RPD	RPD Limit
Batch 1010001 - SW846 3540C										
LCS (1010001-BS1)					Prepared: 12-May-10		Analyzed: 14-May-10			
Aroclor-1260	195		µg/kg wet	20.0	250		78	50-140		
Aroclor-1260 [2C]	218		µg/kg wet	20.0	250		87	50-140		
Surrogate: 4,4-DB-Octafluorobiphenyl (Sr)	*9.00*		µg/kg wet		*20.0*		*45*	*30-150*		
Surrogate: 4,4-DB-Octafluorobiphenyl (Sr) [2C]	*10.0*		µg/kg wet		*20.0*		*50*	*30-150*		
Surrogate: Decachlorobiphenyl (Sr)	*10.0*		µg/kg wet		*20.0*		*50*	*30-150*		
Surrogate: Decachlorobiphenyl (Sr) [2C]	*9.00*		µg/kg wet		*20.0*		*45*	*30-150*		
LCS Dup (1010001-BSD1)					Prepared: 12-May-10		Analyzed: 14-May-10			
Aroclor-1016	192		µg/kg wet	20.0	250		77	50-140	15	30
Aroclor-1016 [2C]	199		µg/kg wet	20.0	250		79	50-140	13	30
Aroclor-1260	198		µg/kg wet	20.0	250		79	50-140	1	30
Aroclor-1260 [2C]	223		µg/kg wet	20.0	250		89	50-140	3	30
Surrogate: 4,4-DB-Octafluorobiphenyl (Sr)	*8.00*		µg/kg wet		*20.0*		*40*	*30-150*		
Surrogate: 4,4-DB-Octafluorobiphenyl (Sr) [2C]	*9.00*		µg/kg wet		*20.0*		*45*	*30-150*		
Surrogate: Decachlorobiphenyl (Sr)	*10.0*		µg/kg wet		*20.0*		*50*	*30-150*		
Surrogate: Decachlorobiphenyl (Sr) [2C]	*9.00*		µg/kg wet		*20.0*		*45*	*30-150*		
Duplicate (1010001-DUP1)			**Source: SB11920-22**		Prepared: 12-May-10		Analyzed: 13-May-10			
Aroclor-1016	BRL		µg/kg dry	27.0		BRL				40
Aroclor-1221	BRL		µg/kg dry	27.0		BRL				40
Aroclor-1232	BRL		µg/kg dry	27.0		BRL				40
Aroclor-1242	BRL		µg/kg dry	27.0		BRL				40
Aroclor-1248	BRL		µg/kg dry	27.0		BRL				40
Aroclor-1254 [2C]	1070		µg/kg dry	27.0		793			30	40
Aroclor-1260 [2C]	283		µg/kg dry	27.0		299			6	40
Aroclor-1262	BRL		µg/kg dry	27.0		BRL				40
Aroclor-1268	BRL		µg/kg dry	27.0		BRL				40
Surrogate: 4,4-DB-Octafluorobiphenyl (Sr)	*14.9*		µg/kg dry		*27.0*		*55*	*30-150*		
Surrogate: 4,4-DB-Octafluorobiphenyl (Sr) [2C]	*16.2*		µg/kg dry		*27.0*		*60*	*30-150*		
Surrogate: Decachlorobiphenyl (Sr)	*17.6*		µg/kg dry		*27.0*		*65*	*30-150*		
Surrogate: Decachlorobiphenyl (Sr) [2C]	*16.2*		µg/kg dry		*27.0*		*60*	*30-150*		
Matrix Spike (1010001-MS1)			**Source: SB11920-22**		Prepared: 12-May-10		Analyzed: 14-May-10			
Aroclor-1016	238		µg/kg dry	25.2	315	BRL	75	40-135		
Aroclor-1260 [2C]	540		µg/kg dry	25.2	315	299	76	40-135		
Surrogate: 4,4-DB-Octafluorobiphenyl (Sr)	*17.7*		µg/kg dry		*25.2*		*70*	*30-150*		
Surrogate: 4,4-DB-Octafluorobiphenyl (Sr) [2C]	*16.4*		µg/kg dry		*25.2*		*65*	*30-150*		
Surrogate: Decachlorobiphenyl (Sr)	*20.2*		µg/kg dry		*25.2*		*80*	*30-150*		
Surrogate: Decachlorobiphenyl (Sr) [2C]	*18.9*		µg/kg dry		*25.2*		*75*	*30-150*		
Matrix Spike Dup (1010001-MSD1)			**Source: SB11920-22**		Prepared: 12-May-10		Analyzed: 13-May-10			
Aroclor-1016	234		µg/kg dry	25.7	321	BRL	73	40-135	4	30
Aroclor-1260 [2C]	533		µg/kg dry	25.7	321	299	73	40-135	5	30
Surrogate: 4,4-DB-Octafluorobiphenyl (Sr)	*18.0*		µg/kg dry		*25.7*		*70*	*30-150*		
Surrogate: 4,4-DB-Octafluorobiphenyl (Sr) [2C]	*16.7*		µg/kg dry		*25.7*		*65*	*30-150*		
Surrogate: Decachlorobiphenyl (Sr)	*23.1*		µg/kg dry		*25.7*		*90*	*30-150*		
Surrogate: Decachlorobiphenyl (Sr) [2C]	*18.0*		µg/kg dry		*25.7*		*70*	*30-150*		
Batch 1010002 - SW846 3540C										
Blank (1010002-BLK1)					Prepared: 12-May-10		Analyzed: 13-May-10			
Aroclor-1016	BRL		µg/kg wet	20.0						

Semivolatile Organic Compounds by GC - Quality Control

Analyte(s)	Result	Flag	Units	*RDL	Spike Level	Source Result	%REC	%REC Limits	RPD	RPD Limit
Batch 1010002 - SW846 3540C										
Blank (1010002-BLK1)						Prepared: 12-May-10	Analyzed: 13-May-10			
Aroclor-1016 [2C]	BRL		µg/kg wet	20.0						
Aroclor-1221	BRL		µg/kg wet	20.0						
Aroclor-1221 [2C]	BRL		µg/kg wet	20.0						
Aroclor-1232	BRL		µg/kg wet	20.0						
Aroclor-1232 [2C]	BRL		µg/kg wet	20.0						
Aroclor-1242	BRL		µg/kg wet	20.0						
Aroclor-1242 [2C]	BRL		µg/kg wet	20.0						
Aroclor-1248	BRL		µg/kg wet	20.0						
Aroclor-1248 [2C]	BRL		µg/kg wet	20.0						
Aroclor-1254	BRL		µg/kg wet	20.0						
Aroclor-1254 [2C]	BRL		µg/kg wet	20.0						
Aroclor-1260	BRL		µg/kg wet	20.0						
Aroclor-1260 [2C]	BRL		µg/kg wet	20.0						
Aroclor-1262	BRL		µg/kg wet	20.0						
Aroclor-1262 [2C]	BRL		µg/kg wet	20.0						
Aroclor-1268	BRL		µg/kg wet	20.0						
Aroclor-1268 [2C]	BRL		µg/kg wet	20.0						
Surrogate: 4,4-DB-Octafluorobiphenyl (Sr)	*15.0*		µg/kg wet		*20.0*		*75*	*30-150*		
Surrogate: 4,4-DB-Octafluorobiphenyl (Sr) [2C]	*15.0*		µg/kg wet		*20.0*		*75*	*30-150*		
Surrogate: Decachlorobiphenyl (Sr)	*17.0*		µg/kg wet		*20.0*		*85*	*30-150*		
Surrogate: Decachlorobiphenyl (Sr) [2C]	*15.0*		µg/kg wet		*20.0*		*75*	*30-150*		
LCS (1010002-BS1)						Prepared: 12-May-10	Analyzed: 13-May-10			
Aroclor-1016	185		µg/kg wet	20.0	250		74	50-140		
Aroclor-1016 [2C]	196		µg/kg wet	20.0	250		78	50-140		
Aroclor-1260	198		µg/kg wet	20.0	250		79	50-140		
Aroclor-1260 [2C]	198		µg/kg wet	20.0	250		79	50-140		
Surrogate: 4,4-DB-Octafluorobiphenyl (Sr)	*15.0*		µg/kg wet		*20.0*		*75*	*30-150*		
Surrogate: 4,4-DB-Octafluorobiphenyl (Sr) [2C]	*15.0*		µg/kg wet		*20.0*		*75*	*30-150*		
Surrogate: Decachlorobiphenyl (Sr)	*18.0*		µg/kg wet		*20.0*		*90*	*30-150*		
Surrogate: Decachlorobiphenyl (Sr) [2C]	*17.0*		µg/kg wet		*20.0*		*85*	*30-150*		
LCS Dup (1010002-BSD1)						Prepared: 12-May-10	Analyzed: 13-May-10			
Aroclor-1016	207		µg/kg wet	20.0	250		83	50-140	11	30
Aroclor-1016 [2C]	200		µg/kg wet	20.0	250		80	50-140	2	30
Aroclor-1260	211		µg/kg wet	20.0	250		84	50-140	6	30
Aroclor-1260 [2C]	204		µg/kg wet	20.0	250		81	50-140	3	30
Surrogate: 4,4-DB-Octafluorobiphenyl (Sr)	*16.0*		µg/kg wet		*20.0*		*80*	*30-150*		
Surrogate: 4,4-DB-Octafluorobiphenyl (Sr) [2C]	*16.0*		µg/kg wet		*20.0*		*80*	*30-150*		
Surrogate: Decachlorobiphenyl (Sr)	*18.0*		µg/kg wet		*20.0*		*90*	*30-150*		
Surrogate: Decachlorobiphenyl (Sr) [2C]	*17.0*		µg/kg wet		*20.0*		*85*	*30-150*		
Batch 1010064 - SW846 3510C										
Blank (1010064-BLK1)						Prepared & Analyzed: 13-May-10				
Aroclor-1016	BRL		µg/l	0.200						
Aroclor-1016 [2C]	BRL		µg/l	0.200						
Aroclor-1221	BRL		µg/l	0.200						
Aroclor-1221 [2C]	BRL		µg/l	0.200						
Aroclor-1232	BRL		µg/l	0.200						
Aroclor-1232 [2C]	BRL		µg/l	0.200						
Aroclor-1242	BRL		µg/l	0.200						

Semivolatile Organic Compounds by GC - Quality Control

Analyte(s)	Result	Flag	Units	*RDL	Spike Level	Source Result	%REC	%REC Limits	RPD	RPD Limit
Batch 1010064 - SW846 3510C										
Blank (1010064-BLK1)					Prepared & Analyzed: 13-May-10					
Aroclor-1242 [2C]	BRL		µg/l	0.200						
Aroclor-1248	BRL		µg/l	0.200						
Aroclor-1248 [2C]	BRL		µg/l	0.200						
Aroclor-1254	BRL		µg/l	0.200						
Aroclor-1254 [2C]	BRL		µg/l	0.200						
Aroclor-1260	BRL		µg/l	0.200						
Aroclor-1260 [2C]	BRL		µg/l	0.200						
Aroclor-1262	BRL		µg/l	0.200						
Aroclor-1262 [2C]	BRL		µg/l	0.200						
Aroclor-1268	BRL		µg/l	0.200						
Aroclor-1268 [2C]	BRL		µg/l	0.200						
Surrogate: 4,4-DB-Octafluorobiphenyl (Sr)	*0.211*		µg/l		*0.200*		*106*	*30-150*		
Surrogate: 4,4-DB-Octafluorobiphenyl (Sr) [2C]	*0.199*		µg/l		*0.200*		*100*	*30-150*		
Surrogate: Decachlorobiphenyl (Sr)	*0.232*		µg/l		*0.200*		*116*	*30-150*		
Surrogate: Decachlorobiphenyl (Sr) [2C]	*0.227*		µg/l		*0.200*		*114*	*30-150*		
LCS (1010064-BS1)					Prepared & Analyzed: 13-May-10					
Aroclor-1016	2.51		µg/l	0.200	2.50		100	50-140		
Aroclor-1016 [2C]	2.44		µg/l	0.200	2.50		98	50-140		
Aroclor-1260	2.53		µg/l	0.200	2.50		101	50-140		
Aroclor-1260 [2C]	2.09		µg/l	0.200	2.50		84	50-140		
Surrogate: 4,4-DB-Octafluorobiphenyl (Sr)	*0.212*		µg/l		*0.200*		*106*	*30-150*		
Surrogate: 4,4-DB-Octafluorobiphenyl (Sr) [2C]	*0.190*		µg/l		*0.200*		*95*	*30-150*		
Surrogate: Decachlorobiphenyl (Sr)	*0.233*		µg/l		*0.200*		*117*	*30-150*		
Surrogate: Decachlorobiphenyl (Sr) [2C]	*0.226*		µg/l		*0.200*		*113*	*30-150*		
LCS Dup (1010064-BSD1)					Prepared & Analyzed: 13-May-10					
Aroclor-1016	2.29		µg/l	0.200	2.50		91	50-140	9	30
Aroclor-1016 [2C]	2.48		µg/l	0.200	2.50		99	50-140	1	30
Aroclor-1260	2.42		µg/l	0.200	2.50		97	50-140	4	30
Aroclor-1260 [2C]	1.98		µg/l	0.200	2.50		79	50-140	5	30
Surrogate: 4,4-DB-Octafluorobiphenyl (Sr)	*0.185*		µg/l		*0.200*		*92*	*30-150*		
Surrogate: 4,4-DB-Octafluorobiphenyl (Sr) [2C]	*0.188*		µg/l		*0.200*		*94*	*30-150*		
Surrogate: Decachlorobiphenyl (Sr)	*0.209*		µg/l		*0.200*		*105*	*30-150*		
Surrogate: Decachlorobiphenyl (Sr) [2C]	*0.206*		µg/l		*0.200*		*103*	*30-150*		

General Chemistry Parameters - Quality Control

Analyte(s)	Result	Flag	Units	*RDL	Spike Level	Source Result	%REC	%REC Limits	RPD	RPD Limit
Batch 1010086 - General Preparation										
Duplicate (1010086-DUP1)			**Source: SB11920-01**		Prepared & Analyzed: 13-May-10					
% Solids	88.2		%			87.7			0.5	20
Batch 1010088 - General Preparation										
Duplicate (1010088-DUP1)			**Source: SB11920-22**		Prepared & Analyzed: 13-May-10					
% Solids	75.8		%			73.2			4	20

Notes and Definitions

E	The concentration indicated for this analyte is an estimated value. This value is considered an estimate (CLP E-flag).
BRL	Below Reporting Limit - Analyte NOT DETECTED at or above the reporting limit
dry	Sample results reported on a dry weight basis
NR	Not Reported
RPD	Relative Percent Difference
J	Detected but below the Reporting Limit; therefore, result is an estimated concentration (CLP J-Flag).

A plus sign (+) in the Method Reference column indicates the method is not accredited by NELAC.

Laboratory Control Sample (LCS): A known matrix spiked with compound(s) representative of the target analytes, which is used to document laboratory performance.

Matrix Duplicate: An intra-laboratory split sample which is used to document the precision of a method in a given sample matrix.

Matrix Spike: An aliquot of a sample spiked with a known concentration of target analyte(s). The spiking occurs prior to sample preparation and analysis. A matrix spike is used to document the bias of a method in a given sample matrix.

Method Blank: An analyte-free matrix to which all reagents are added in the same volumes or proportions as used in sample processing. The method blank should be carried through the complete sample preparation and analytical procedure. The method blank is used to document contamination resulting from the analytical process.

Method Detection Limit (MDL): The minimum concentration of a substance that can be measured and reported with 99% confidence that the analyte concentration is greater than zero and is determined from analysis of a sample in a given matrix type containing the analyte.

Reportable Detection Limit (RDL): The lowest concentration that can be reliably achieved within specified limits of precision and accuracy during routine laboratory operating conditions. For many analytes the RDL analyte concentration is selected as the lowest non-zero standard in the calibration curve. While the RDL is approximately 5 to 10 times the MDL, the RDL for each sample takes into account the sample volume/weight, extract/digestate volume, cleanup procedures and, if applicable, dry weight correction. Sample RDLs are highly matrix-dependent.

Surrogate: An organic compound which is similar to the target analyte(s) in chemical composition and behavior in the analytical process, but which is not normally found in environmental samples. These compounds are spiked into all blanks, standards, and samples prior to analysis. Percent recoveries are calculated for each surrogate.

Continuing Calibration Verification: The calibration relationship established during the initial calibration must be verified at periodic

Validated by:
Hanibal C. Tayeh, Ph.D.
June O'Connor
Kimberly Wisk

Reasonable Confidence Protocols
Laboratory Analysis
QA/QC Certification Form

Laboratory Name: Spectrum Analytical, Inc.

Client: TRC - Windsor, CT

Project Location: Wilcox Technical High School - Meriden, CT

Project Number: 176153.0000.0000

Sampling Date(s):
5/10/2010 through 5/8/2010

Laboratory Sample ID(s):
SB11920-01 through SB11920-49

RCP Methods Used:
SW846 8082

1	For each analytical method referenced in this laboratory report package, were all specified QA/QC performance criteria followed, including the requirement to explain any criteria falling outside of acceptable guidelines, as specified in the CT DEP method-specific Reasonable Confidence Protocol documents?	✓ Yes No
1A	Were the method specified preservation and holding time requirements met?	✓ Yes No
1B	***VPH and EPH methods only***: Was the VPH or EPH method conducted without significant modifications (see Section 11.3 of respective RCP methods)? * ** These methods have not yet been approved for release by CT DEP*	Yes No ✓ N/A
2	Were all samples received by the laboratory in a condition consistent with that described on the associated chain-of-custody document(s)?	✓ Yes No
3	Were samples received at an appropriate temperature?	✓ Yes No
4	Were all QA/QC performance criteria specified in the Reasonable Confidence Protocol documents achieved?	✓ Yes No
5	a) Were reporting limits specified or referenced on the chain-of-custody? * b) Were these reporting limits met? ** Exceptions are defined by qualifiers*	Yes ✓ No Yes No
6	For each analytical method referenced in this laboratory report package, were results reported for all constituents identified in the method-specific analyte lists presented in the Reasonable Confidence Protocol documents?	✓ Yes No
7	Are project-specific matrix spikes and laboratory duplicates included in this data set?	✓ Yes No

Note: For all questions to which the response was "No" (with the exception of question #7), additional information must be provided in an attached narrative. If the answer to question #1, #1A, or #1B is "No", the data package does not meet the requirements for "Reasonable Confidence."

I, the undersigned, attest under the pains and penalties of perjury that, to the best of my knowledge and belief and based upon my personal inquiry of those responsible for obtaining the information contained in this analytical report, such information is accurate and complete.

Hanibal C. Tayeh, Ph.D.
President/Laboratory Director
Date: 5/14/2010

DPW Project Number: BI-RT-843
Appendix #3
Addendum #6

SB 11920

SPECTRUM ANALYTICAL, INC.
Featuring
HANIBAL TECHNOLOGY

CHAIN OF CUSTODY RECORD

Page 1 of 5

Special Handling:
- ☐ Standard TAT - 7 to 10 business days
- ☑ Rush TAT - Date Needed: 72-hr.
- All TATs subject to laboratory approval.
- Min. 24-hour notification needed for rushes.
- Samples disposed of after 60 days unless otherwise instructed.

Report To: TRC
21 Griffin Rd. N.
Windsor, CT 06095
Telephone #: 860-298-9692
Project Mgr. Malcolm Beeler

Invoice To: DAS Contract
P.O. No.: RQN:

Project No.: 176153.0000.0000
Site Name: Wilcox Technical School
Location: Meriden State: CT
Sampler(s): M. Wilbourne / H. Hernandez

1=$Na_2S_2O_3$ 2=HCl 3=H_2SO_4 4=HNO_3 5=NaOH 6=Ascorbic Acid 7=CH_3OH
8= $NaHSO_4$ 9= Iced 10= 11=

List preservative code below: 9

DW=Drinking Water GW=Groundwater WW=Wastewater
O=Oil SW= Surface Water SO=Soil SL=Sludge A=Air
X1= X2= X3=

G=Grab C=Composite

QA/QC Reporting Notes: (check as needed)
- ☐ Provide MA DEP MCP CAM Report
- ☑ Provide CT DPH RCP Report

QA/QC Reporting Level
☐ Standard ☐ No QC
☐ Other

State specific reporting standards:

Lab Id:	Sample Id:	Date:	Time:	Type	Matrix	# of VOA Vials	# of Amber Glass	# of Clear Glass	# of Plastic	PCBs (3540/8082)
11920-01	NESBA-Comp 1	5/10/10	0930	C	SO			1		✓
-02	NESBA-Comp 2		0940	C	SO			1		✓
-03	NESBA-Comp 3		0945	C	SO			1		✓
-04	NESBA-Comp 4		0950	C	SO			1		✓
-05	NESBA-Comp 5		1000	C	SO			1		✓
-06	NESBA-Comp 6		1005	C	SO			1		✓
-07	NESBA-Comp 7		1010	C	SO			1		✓
-08	NESBA-Comp 8		1015	C	SO			1		✓
-09	NESBA-Comp 9		1020	C	SO			1		✓
-10	NESBA-Comp 10	5/10/10	1025	C	SO			1		✓

Relinquished by:	Received by:	Date:	Time:	Temp°C
[signature]	[signature]	5/11/10	5:20	1.1
		5/11/10	1831	1.2

☑ EDD Format Excel and PDF
☑ E-mail to mbeeler@trcsolutions.com
Stored under custody seal 102973F in TRC Lab

☐ Ambient ☒ Iced ☐ Refrigerated ☐ Fridge temp ___ °C ☐ Freezer temp ___ °C

DPW Project Number: BI-RT-843
Appendix #3
Addendum #6

11920

SPECTRUM ANALYTICAL, INC.
Featuring
HANIBAL TECHNOLOGY

CHAIN OF CUSTODY RECORD

Page 2 of 5

Special Handling:
- ☐ Standard TAT - 7 to 10 business days
- ☑ Rush TAT - Date Needed: 72-hr.
- All TATs subject to laboratory approval.
- Min. 24-hour notification needed for rushes.
- Samples disposed of after 60 days unless otherwise instructed.

Report To: TRC
21 Griffin Rd. N.
Windsor, CT 06095
Telephone #: 860-298-9692
Project Mgr. Malcolm Beeler

Invoice To: DAS Contract
P.O. No.: RQN:

Project No.: 176153.0000.0000
Site Name: Wilcox Technical School
Location: Meriden State: CT
Sampler(s): M. Winbourne / H. Hernandez

1=$Na_2S_2O_3$ 2=HCl 3=H_2SO_4 4=HNO_3 5=NaOH 6=Ascorbic Acid 7=CH_3OH
8= $NaHSO_4$ 9= Iced 10= 11=

List preservative code below: 9

QA/QC Reporting Notes: (check as needed)
- ☐ Provide MA DEP MCP CAM Report
- ☑ Provide CT DPH RCP Report

QA/QC Reporting Level: ☐ Standard ☐ No QC
☐ Other
State specific reporting standards:

DW=Drinking Water GW=Groundwater WW=Wastewater
O=Oil SW= Surface Water SO=Soil SL=Sludge A=Air
X1= X2= X3=

G=Grab C=Composite

Lab Id:	Sample Id:	Date:	Time:	Type	Matrix	# of VOA Vials	# of Amber Glass	# of Clear Glass	# of Plastic	PCBs (3540/8082)	PCBs (8082)
11920-11	NESBA-Comp11	5/10/10	1035	C	SO			1		✓	
-12	NESBA-Comp12	5/10/10	1038	C	SO			1		✓	
-13	FB050810	5/8/10	0905	G	GW		1				✓
-14	NESBA-Comp13	5/10/10	1045	C	SO			1		✓	
-15	NESBA-Comp14		1050	C	SO			1		✓	
-16	NESBA-Comp15		1055	C	SO			1		✓	
-17	NESBA-Comp16		1100	C	SO			1		✓	
-18	NESBA-Comp17		1105	C	SO			1		✓	
-19	NS-BB-Comp1		1115	C	SO			1		✓	
-20	NS-BB-Comp2	5/10/10	1120	C	SO			1		✓	

Relinquished by:	Received by:	Date:	Time:	Temp°C
[signature]	[signature]	5/11/10	5:25	1.1
[signature]	[signature]	5/11/10	1831	1.2

☑ EDD Format Excel + PDF
☑ E-mail to mbeeler@trcsolutions.com
Stored under custody seal 1028775 in TRC Lab

☐ Ambient ☑ Iced ☐ Refrigerated ☐ Fridge temp ___ °C ☐ Freezer temp ___ °C

DPW Project Number: BI-RT-843
Appendix #3
Addendum #6

11920

SPECTRUM ANALYTICAL, INC.
Featuring
HANIBAL TECHNOLOGY

CHAIN OF CUSTODY RECORD

Page 3 of 5

Special Handling:
- ☐ Standard TAT - 7 to 10 business days
- ☑ Rush TAT - Date Needed: 72-hr.
- All TATs subject to laboratory approval.
- Min. 24-hour notification needed for rushes.
- Samples disposed of after 60 days unless otherwise instructed.

Report To: TRC
21 Griffin Rd. N.
Windsor, CT 06095
Telephone #: 860-298-9692
Project Mgr. Malcolm Beeler

Invoice To: DAS Contract
P.O. No.: RQN:

Project No.: 176153.0000.0000
Site Name: Wilcox Technical School
Location: Meriden State: CT
Sampler(s): M. Winbourne / H. Hernandez

1=$Na_2S_2O_3$ 2=HCl 3=H_2SO_4 4=HNO_3 5=NaOH 6=Ascorbic Acid 7=CH_3OH
8= $NaHSO_4$ 9= Iced 10= 11=

List preservative code below: 9

QA/QC Reporting Notes: (check as needed)

DW=Drinking Water GW=Groundwater WW=Wastewater
O=Oil SW= Surface Water SO=Soil SL=Sludge A=Air
X1= X2= X3=

G=Grab C=Composite

Containers: Analyses:

Lab Id:	Sample Id:	Date:	Time:	Type	Matrix	# of VOA Vials	# of Amber Glass	# of Clear Glass	# of Plastic	PCBs (3540/8082)
11920 21	NSBB-SS5	5/8/10	1454	G	So		1			✓
22	NS-BB-SS1E	↓	1457	G	So		1			✓
23	NS-BB-SS(1')	5/8/10	1500	G	So		1			✓
24	NWSBA-Comp 1	5/10/10	1130	C	So		1	1		✓
25	NWSBA-Comp 2	↓	1135	C	So		1	1		✓
26	NWSBA-Comp 3		1140	C	So			1		✓
27	NWSBA-Comp 4		1145	C	So			1		✓
28	NWSBA-Comp 5		1150	C	So			1		✓
29	NWSBA-Comp 6		1155	C	So			1		✓
30	NWSBA-Comp 7	5/10/10	1205	C	So			1		✓

Relinquished by:	Received by:	Date:	Time:	Temp°C
[signature]	[signature]	5/11/10	5:25	1.1
[signature]	[signature]	5/11/10	1831	1.2

☑ EDD Format Excel w/ PDF
☑ E-mail to mbeeler@trcsolutions.com
Stored w/o custody seal 102877F in TRC Lab

☐ Ambient ☒ Iced ☐ Refrigerated ☐ Fridge temp ___ °C ☐ Freezer temp ___ °C

DPW Project Number: BI-RT-843
Appendix #3
Addendum #6

11920

SPECTRUM ANALYTICAL, INC.
Featuring
HANIBAL TECHNOLOGY

CHAIN OF CUSTODY RECORD

Page 4 of 5

Special Handling:
- ☐ Standard TAT - 7 to 10 business days
- ☑ Rush TAT - Date Needed: 72-hr.
- All TATs subject to laboratory approval.
- Min. 24-hour notification needed for rushes.
- Samples disposed of after 60 days unless otherwise instructed.

Report To: TRC
21 Griffin Rd. N.
Windsor, CT 06095

Telephone #: 860-298-9692
Project Mgr. Malcolm Beeler

Invoice To: DAS Contract

P.O. No.: RQN:

Project No.: 176153.0000.0000
Site Name: Wilcox Technical School
Location: Meriden State: CT
Sampler(s): M. Winbourne / H. Hernandez

1=$Na_2S_2O_3$ 2=HCl 3=H_2SO_4 4=HNO_3 5=NaOH 6=Ascorbic Acid 7=CH_3OH
8= $NaHSO_4$ 9= Iced 10= 11=

List preservative code below: 9

DW=Drinking Water GW=Groundwater WW=Wastewater
O=Oil SW= Surface Water SO=Soil SL=Sludge A=Air
X1= X2= X3=

G=Grab C=Composite

QA/QC Reporting Notes: (check as needed)
- ☐ Provide MA DEP MCP CAM Report
- ☑ Provide CT DPH RCP Report

QA/QC Reporting Level
☐ Standard ☐ No QC
☐ Other

State specific reporting standards:

Lab Id:	Sample Id:	Date:	Time:	Type	Matrix	# of VOA Vials	# of Amber Glass	# of Clear Glass	# of Plastic	PCBs (3540/8082)
11920-31	NWSBA-Comp 8	5/10/10	1230	C	So			1		✓
-32	NWSBA-Comp 9		1240	C	So			1		✓
-33	NWSBA-Comp 10		1245	C	So			1		✓
-34	NWSBA-Comp 11		1255	C	So			1		✓
-35	NWSBA-Comp 12		1257	C	So			1		✓
-36	NWSBA-Comp 13		1303	C	So			1		✓
-37	NWSBA-Comp 14		1308	C	So			1		✓
-38	NWSBA-Comp 15		1314	C	So			1		✓
-39	NWSBA-Comp 16		1317	C	So			1		✓
-40	NWSBA-Comp 17	5/10/10	1320	C	So			1		✓

Relinquished by:	Received by:	Date:	Time:	Temp°C
[signature]	[signature]	5/11/10	5:25	1.1
[signature]	[signature]	5/11/10	1831	1.2

☑ EDD Format Excel + PDF
☑ E-mail to mbeeler@trcsolutions.com
Stored under custody seal 102873F in TRC Lab

☐ Ambient ☑ Iced ☐ Refrigerated ☐ Fridge temp ___ °C ☐ Freezer temp ___ °C

DPW Project Number: BI-RT-843
Appendix #3
Addendum #6

11920

SPECTRUM ANALYTICAL, INC.
Featuring
HANIBAL TECHNOLOGY

CHAIN OF CUSTODY RECORD

Page 5 of 5

Special Handling:
- ☐ Standard TAT - 7 to 10 business days
- ☑ Rush TAT - Date Needed: 72-hr.
- All TATs subject to laboratory approval.
- Min. 24-hour notification needed for rushes.
- Samples disposed of after 60 days unless otherwise instructed.

Report To: TRC
21 Griffin Rd. N.
Windsor, CT 06095
Telephone #: 860-298-9692
Project Mgr. Malcolm Beeler

Invoice To: DAS Contract
P.O. No.: RQN:

Project No.: 176153.0000.0000
Site Name: Wilcox Technical School
Location: Meriden State: CT
Sampler(s): M. Winbourne / H. Hernandez

1=$Na_2S_2O_3$ 2=HCl 3=H_2SO_4 4=HNO_3 5=NaOH 6=Ascorbic Acid 7=CH_3OH
8= $NaHSO_4$ 9= Iced 10= 11=

List preservative code below: 9

DW=Drinking Water GW=Groundwater WW=Wastewater
O=Oil SW= Surface Water SO=Soil SL=Sludge A=Air
X1= X2= X3=

G=Grab C=Composite

QA/QC Reporting Notes: (check as needed)
- ☐ Provide MA DEP MCP CAM Report
- ☑ Provide CT DPH RCP Report

QA/QC Reporting Level
☐ Standard ☐ No QC
☐ Other

State specific reporting standards:

Lab Id:	Sample Id:	Date:	Time:	Type	Matrix	# of VOA Vials	# of Amber Glass	# of Clear Glass	# of Plastic	PCBs (3540/8082)
11920-41	NWSBA-Comp 18	5/10/10	1325	C	SO			✓		✓
-42	NWSBA-Comp 19		1329	C	SO			1		✓
-43	NWSBA-Comp 20		1334	C	SO			1		✓
-44	NWSBA-Comp 21		1340	C	SO			1		✓
-45	NWSBA-Comp 22		1346	C	SO			1		✓
-46	NWSBA-Comp 23		1350	C	SO			1		✓
-47	NWSBA-Comp 24		1355	C	SO			1		✓
-48	NWSBA-Comp 25		1400	C	SO			1		✓
-49	NWSBA-Comp 26	5/10/10	1300	C	SO			1		✓

Relinquished by:	Received by:	Date:	Time:	Temp°C
[signature]	[signature]	5/11/10	5:25	1.1
[signature]	[signature]	5/11/10	1831	1.2

☑ EDD Format Excel and PDF
☑ E-mail to mbeeler@trcsolutions.com
Stored under custody seal # 102873F in TRC Lab
☐ Ambient ☑ Iced ☐ Refrigerated ☐ Fridge temp ___ °C ☐ Freezer temp ___ °C

APPENDIX C

Materials Sampling Protocols & Field Notes

TRC
Bulk Caulk/Glaze Sample Log

Sample #	Homogeneous Material Type SAME as Sample #	Material removed to completely expose both sides of substrate and backing material (Y/N)	Visually inspected sampled material to ensure consists of one homogeneous material (Y/N)	Visually inspected inside sampled joint area for evidence of differing/older materials (Y/N)	Any differing/older materials identified in joint sampled as separate homogeneous materials (Y/N/NA)	Photo of sample location taken (Y/N)
C1		Y	Y	Y	N	N
G1		Y	Y	Y	NA	
C2		Y	Y	Y	NA	
G2		Y	Y	Y	NA	
C3		Y	Y	Y	NA	
C4		Y	Y	Y	NA	
DC1		Y	Y	Y	NA	
DC2		Y	Y	Y	NA	
C5		Y	Y	Y	NA	
G3		Y	Y	Y	N - NON Suspect	
C6		Y	Y	Y	NA	
C7		Y	Y	Y	NA	

Inspector: _____

Date: 4/2/10

DPW Project Number: BI-RT-843
Appendix #3
Addendum #6

TRC
Bulk Caulk/Glaze Sample Log

Sample #	Homogeneous Material Type SAME AS SAMPLE #	Material removed to completely expose both sides of substrate and backing material (Y/N)	Visually inspected sampled material to ensure consists of one homogeneous material (Y/N)	Visually inspected inside sampled joint area for evidence of differing/older materials (Y/N)	Any differing/older materials identified in joint sampled as separate homogeneous materials (Y/N/NA)	Photo of sample location taken (Y/N)
G4		Y	Y	Y	NA	N
DC8		Y	Y	Y		
C8		Y	Y	Y		
DC9		Y	Y	Y		
C9		Y	Y	Y		
C10		Y	Y	Y		
DC10		Y	Y	Y		
DC11		Y	Y	Y		
DC12		Y	Y	Y		
C11		Y	Y	Y		
1G1		Y	Y	Y		
DC1		Y	Y	Y	N	

Inspector: [signature]

Date: 4/2/10

DPW Project Number: BI-RT-843
Appendix #3
Addendum #6

TRC
Bulk Caulk/Glaze Sample Log

Sample #	Homogeneous Material Type SAME AS SAMPLE #	Material removed to completely expose both sides of substrate and backing material (Y/N)	Visually inspected sampled material to ensure consists of one homogeneous material (Y/N)	Visually inspected inside sampled joint area for evidence of differing/older materials (Y/N)	Any differing/older materials identified in joint sampled as separate homogeneous materials (Y/N/NA)	Photo of sample location taken (Y/N)
1C1		Y	Y	Y	NA	N
1DC2		Y	Y	Y		
1C2		Y	Y	Y		
1G2		Y	Y	Y		
1E1		Y	Y	Y		
1EE2		Y	Y	Y		
1DC3		Y	Y	Y		
1DC4		Y	Y	Y		
1DC5		Y	Y	Y		
1G3		Y	Y	Y		
1DC6		Y	Y	Y		
1DC7		Y	Y	Y	Y	Y

Inspector: [signature]

Date: 4/2/10

DPW Project Number: BI-RT-843
Appendix #3
Addendum #6

TRC
Bulk Caulk/Glaze Sample Log

Sample #	Homogeneous Material Type SAME AS SAMPLE #	Material removed to completely expose both sides of substrate and backing material (Y/N)	Visually inspected sampled material to ensure consists of one homogeneous material (Y/N)	Visually inspected inside sampled joint area for evidence of differing/older materials (Y/N)	Any differing/older materials identified in joint sampled as separate homogeneous materials (Y/N/NA)	Photo of sample location taken (Y/N)
1DC8		Y	Y	Y	NA	N
1DC9		Y	Y	Y		
1C3		Y	Y	Y		
1DC10		Y	Y	Y		
1C4		Y	Y	Y		

Inspector: [signature]

Date: 4/2/10

DPW Project Number: BI-RT-843
Appendix #3
Addendum #6

TABLE 1
BULK SAMPLE SUMMARY OF SUSPECT PCB CONTAINING CAULKS/GLAZES
WILCOX TECH
MERIDEN, CONNECTICUT

Sample No.	Homogeneous Material Type	General Location	Total PCB (ppm)
C1	Exterior grey over beige expansion joint caulk	North side of main entry foyer Throughout shop wing	39
G1	Exterior white brittle window glazing	Throughout main wing windows North and East sides of Shop wing East side mechanical room windows	1200
C2	Exterior grey/silver caulk along window wall & brick	Throughout main wing windows East side shop wing doors	320000
G2	Exterior black sticky glazing on replacement window	West side gym wing	15
C3	Exterior white pliable caulk on window wall panels	West side main wing near main entry	23
C4	Exterior hard brown caulk along brick	Northwest side main wing East side main wing entries	1.1
DC1	Exterior white/grey hard door caulk over foam	East and West entries to north main wing Northeast entry near old gym Southeast entry to north main wing	2000
DC2	Exterior grey pliable door caulk	North entry to lecture hall Southwest doors to north main wing	57000
C5	Exterior black/grey caulk along window sill	North & south sides of north main wing	ND<2.5
G3	Exterior hard clear over soft grey window glazing	North & south sides of north main wing	4.3
C6	Exterior white pliable around a/c unit	South side of north main wing	9.7
C7	Exterior grey pliable caulk between window panel and concrete	South side of north main wing North, south & west sides of shop wing	21000
G4	Exterior black sticky glazing on window wall panels	South east entry of north main wing	2.3
DC8	Exterior hard grey door caulk	North entry to shop wing	1.5
C8	Exterior light grey hard caulk along window and brick	Northeast side of shop wing	23
DC9	Exterior dark brown pliable door caulk	East side auto shop entry	1.8
C9	Exterior white hard caulk around metal corner wall guards by garage doors	East side of shop wing	ND<0.5
C10	Exterior white soft expansion joint caulk	South section of shop wing	19
DC10	Exterior white powdery pliable door caulk	South east side o f shop wing Throughout annex	ND<0.5
DC11	Exterior hard white thick door caulk	West entry to carpentry shop	8.5
DC12	Exterior brown soft pliable door caulk	South side b/w gym and shop wings	1.9
C11	Exterior hard grey caulk between window and brick	Southwest side gym wing	7.5
IG1	Interior hard grey window glazing	Throughout main wing, north main wing, & shop wing	200

PCB caulk/glaze ≥ 50 ppm is defined as PCB Bulk Product Waste under EPA 40 CFR 761.62
ND< = Not-Detected, Less Than
All samples analyzed via EPA 8082 Method with EPA Method 3540 extraction

DRAFT

TABLE 1 BULK SAMPLE SUMMARY OF SUSPECT PCB CONTAINING CAULKS/GLAZES WILCOX TECH MERIDEN, CONNECTICUT			
IDC1	Interior hard grey/tan thin bead door caulk	2nd floor main wing room A223	4.1
IC1	Interior white pliable caulk around A/C units	Library	3.8
IDC2	Interior off white pliable door caulk	Library soffit area	9.6
IC2	Interior white pliable soffit caulk	2nd floor classrooms	3.8
IG2	Interior window wall panel glazing	Plumbing shop	0.98
IE1	Interior beige pliable expansion joint caulk	Graphics shop classroom & hall outside graphics	12000
IE2	Interior grey rubber expansion joint caulk over foam	Graphics shop & plumbing shop	16000
IDC3	Interior hard grey caulk around door	Auto Shop, carpentry shop, northwest corner shop	62
IDC4	Interior thick hard dark grey caulk between door and window	Carpentry shop	3.2
IDC5	Interior white door caulk	Auto shop	38
IG3	Interior black sticky interior window panel glazing	Center east side shops	ND<0.5
IDC6	Interior dark brown pliable exterior door caulk	Auto shop	6.2
IDC7	Interior dark brown sticky exterior door caulk	East side entrance to shop wing	1.3
IDC8	Interior off white pliable door caulk	Interior doors door in the hotel shop	1.57
IDC9	Interior hard tan door caulk	Closet doors next to mechanical room	6.1
IC3	Interior white pliable caulk around doors & expansion joints	Hallway to shop wing and hall to new gym	1.5
IDC10	Interior soft grey door caulk	Throughout annex	3.6
IC4	Interior grey window caulk	Plumbing shop classroom	71000

DRAFT

PCB caulk/glaze ≥ 50 ppm is defined as PCB Bulk Product Waste under EPA 40 CFR 761.62
ND< = Not-Detected, Less Than
All samples analyzed via EPA 8082 Method with EPA Method 3540 extraction

TRC
Standard Operating Procedure
Bulk Caulk/Glaze Sampling for PCB
Rev. 2-10-10

- Sampling Methodology: Single grab sample per homogeneous material type identified
- Analysis Method: EPA 8082/3540C (PCB w/soxhlet extraction)
- TRC required laboratory detection level <50 ppm

TRC sampling protocols:

- Nitrile gloves & safety glasses when collecting/handling samples
- Exclude building wings constructed, or totally renovated, after 1979 PCB ban
- Identify homogeneous suspect materials following AHERA type asbestos inspection protocols
- Look for areas of potential original caulk/glaze below replacement caulks/glaze
- Keep notes on each sample collected to document caulk sampled down to substrate/backer and no evidence of prior older caulk present, such that sample represents distinct homogeneous material
- Complete the bulk caulk sample log table for each sample collected, indicating all sampling protocols to evaluate materials homogeneity were completed
- Note condition of each type of homogeneous material and locations of damage
- 1 sample collected from each type of homogeneous interior/exterior caulk/glaze associated with building envelope (windows, doors, seams, expansion joints, etc)
- ~10 gram minimum bulk sample size
- 1 duplicate sample collected side by side per school
- Place bulk into 2 oz glass jar with attached sample label
- Decon sampling tools with hexane wipe between samples
- Note all sample locations on drawings
- Note suspect material locations on drawings
- Take photo documentation of homogeneous material types/sample locations
- Install replacement caulk to seal sample location
- Utilize Sikaflex 2c NS - non-sag, multi-component polyurethane sealant – Sika Corp., Lyndhurst, NJ
- Completely fill out chain of custody including date, sample ID, sample location (int/ext, bldg, wing, side, floor, room, component, substrate, etc.), homogeneous material description (int/ext, component, caulk/glaze, color, consistency, use, general location, etc.), analysis requested, turnaround time requested
- Store/transport samples under blue ice (<4°C) conditions
- Deliver to laboratory within 48 hours of sample collection, sign/date chain of custody
- No smoking during sampling time, no eating or drinking in building

APPENDIX D

Public Communication Procedure

Insert Date Here

Draft Notification to Parents, Teachers and Employee Organizations

H.C. Wilcox Technical High School will commence a demolition and renovation program starting on *[insert date]*. During this program there will be removal of asbestos containing materials and PCB-contaminated building materials and soil identified at the school.

The asbestos and PCB abatement programs were authorized by the State of Connecticut Departments of Public Health (CT DPH) and Environmental Protection (CT DEP) and the United States Environmental Protection Agency Region 1 (EPA) after careful planning and thorough review.

It is anticipated that workers and students will use the Wilcox Technical School buildings while removal and abatement is ongoing. To prevent exposure of these persons to contaminated dust, Control Areas will be established outside of the Regulated/Containment/Soil Excavation Areas. Only properly trained personnel associated with the removal, abatement, and soil excavation actions will be allowed within the Control Areas that will be established by placing barriers with signs indicating that access to the area is restricted. Oversight will be provided to prevent unauthorized persons from entering these restricted areas.

The asbestos and PCB abatement work will be performed by a Connecticut Department of Public Health licensed asbestos abatement contractor and personnel experienced in the handling of PCB contaminated materials, *insert contractor name here*. Asbestos and PCB abatement work will be monitored continuously by *insert contractor name here*., an independent environmental consultant hired by the State to conduct air testing during asbestos and PCB abatement activities.

As required by the CT DPH, CT DEP and EPA, this notification is being sent to parents, teachers, and employee organizations at H.C. Wilcox Technical High School. Any questions about the project may be directed to Mr. Richard Cavallaro, Principal, H.C. Wilcox Technical High School at (203) 238-6268 or Richard.Cavallaro@ct.gov.

We appreciate your patience and understanding during this process.

Sincerely,

Richard Cavallaro

(please turn over →)

State of Connecticut Department of Public Health	Division of Environmental Health 410 Capitol Avenue, MS#51AIR Hartford, CT 06134-0308 860-509-7367
State of Connecticut Department of Environmental Protection	79 Elm Street Hartford, CT 06106 860-424-3329
Asbestos/PCB Consultant:	*To be determined* *Street Address* *City, State Zip Code* *Contact Number*
Asbestos/PCB Abatement Contractor:	*To be determined* *Street Address* *City, State Zip Code* *Contact Number*

cc: Alexander Richmond, Connecticut Department of Education
John Woodmansee, Connecticut Department of Education
Barbara Cosgrove, Connecticut Department of Public Works
Jeff Bolton, Connecticut Department of Public Works

APPENDIX E

Engineering Control Descriptions

Rev. Date 04/01/10

Engineering Control Provisions:

(a) General Requirements

The Site Supervisor employed by the Contractor shall be in control on the job site at all times during abatement work. All employees of the Contractor who shall perform work shall be properly trained to perform such duties.

All labor, materials, tools, equipment, services, testing, insurance and incidentals which are necessary or required to perform the work in accordance with applicable governmental regulations, industry standards and codes, and these Specifications shall be provided by the Contractor. The Contractor shall be prepared to work any/all shifts and weekends throughout the course of this project.

Prior to beginning work, the Engineer and Contractor shall perform a visual survey of each work area and review conditions at the site for safety reasons. In addition, the Contractor shall instruct all workers in all aspects of personnel protection, work procedures, emergency evacuation procedures and use of equipment including procedures unique to this project.

The Contractor shall:

Shutdown and isolate heating, cooling, and ventilating air systems to prevent contamination of the other areas of the building.

Shut down and lock out electrical power, including all receptacles and light fixtures, when feasible. The use or isolation of electrical power will be coordinated with all other ongoing uses of electrical power at the site.

Coordinate all power and fire alarm isolation with the appropriate representatives.

When necessary, provide temporary power and adequate lighting and ensure safe installation of electrical equipment, including ground fault protection and power cables, in compliance with applicable electrical codes and OSHA requirements. The Contractor is responsible for proper connection and installation of electrical wiring.

If sufficient electrical service is unavailable, the Contractor may need to supply electrical power to the site by fuel operated generator(s). Electrical power supply shall be sufficient for all equipment required for this project in operation throughout the duration of the project

Water service may not be available at the site. Contractor shall supply sufficient water for each shift to maintain the work areas adequately wet.

Ladders and/or scaffolds shall be in compliance with OSHA requirements, and of adequate length, strength and sufficient quantity to support the scope of work. Use of ladders/scaffolds shall be in conformance with OSHA 29 CFR 1926 Subpart L and X requirements.

Work performed at heights exceeding six feet (6') shall be performed in accordance with the OSHA Fall Protection Standard 29 CFR 1926 Subpart M including the use of fall arrest systems as applicable.

Data provided regarding PCB sampling conducted throughout the structure(s) is for informational purposes only. Under no circumstances shall this information be the sole means used by the Contractor for determining the presence and location of all PCB Bulk Product Wastes and PCB Remediation Wastes. The Contractor shall verify all field conditions affecting performance of the work as described in these Specifications in accordance with OSHA, USEPA, USDOT, DEP standards. Compliance with the applicable requirements is solely the responsibility of the Contractor.

The Engineer will provide a Project Monitor to oversee the activities of the Contractor. No PCB work shall be performed until the Project Monitor is on-site. Pre-abatement, during abatement and post-abatement verification sampling will be conducted as deemed necessary by the Project Monitor. Waste stream testing will be performed, as necessary, by the Project Monitor prior to waste disposal.

(b) Interior Engineering Controls

Interior Engineering Controls shall generally follow those employed in the asbestos abatement industry for OSHA Class I interior asbestos removal.

Pre-clean the work areas using HEPA filtered equipment (vacuum) and/or wet methods with a performance-based organic decontamination fluid (PODF) as appropriate, collecting and properly containing all dust and debris as PCB waste. Vacuum units, of suitable size and capabilities for the project, shall have HEPA filters capable of trapping and retaining at least 99.97 percent of all monodispersed particles of three micrometers in diameter or larger. Do not use methods that raise dust, such as dry sweeping or vacuuming with equipment not equipped with HEPA filters.

After pre-cleaning, movable objects shall be removed from the work areas with the utmost care to prevent damage of any kind and relocated to a temporary storage location coordinated with the Engineer. The Contractor is responsible for protecting all fixed objects that are permanent fixtures or are too large to remove and remain inside the Regulated Area. Fixed objects shall be enclosed with one layer of six (6) mil polyethylene sheeting sealed with tape.

Seal off all windows, doorways, skylights, ducts, grilles, diffusers, vents, light fixtures, electrical receptacles, suspended ceiling tile systems and any other openings between the Regulated Area and the uncontaminated areas outside of the Regulated Area, including the outside of the

building, with critical barriers consisting of a minimum of one (1) layer of six (6) mil polyethylene sheeting securing the edges with tape.

A Negative Pressure Enclosure (NPE) shall be constructed via covering of floor and wall surfaces with polyethylene sheeting sealed with tape. Polyethylene shall be applied alternately to floors and walls. Cover floors first, with a layer of six (6) mil polyethylene sheeting, so that polyethylene extends at least twelve (12) inches up on wall. Cover wall with a layer of six (6) mil polyethylene sheeting to twelve (12) inches beyond the wall/floor intersection, thus overlapping the floor material by a minimum of twenty-four (24) inches. Repeat the process for the second layer of polyethylene. There shall be no seams at wall-to-floor joints. Protect carpet and floor tile with two additional layers of six (6) mil reinforced polyethylene in addition to the prior two layers required.

A single chamber airlock shall be constructed contiguous to the NPE, constructed of six (6) mil poly, to serve as the access point to enter the regulated area.

The Contractor shall create a negative pressure differential in the range of 0.02 to 0.04 inches of water column between the Regulated Area and surrounding areas by the use of acceptable negative air pressure equipment. Exhaust air filtration units shall be equipped with HEPA filters capable of providing sufficient air exhaust to create a minimum pressure differential of 0.02 inches of water column, and to allow a sufficient flow of air through the area providing 4 air changes per hour. The Contractor shall provide a sufficient quantity of HEPA air filters to maintain the pressure differential throughout the duration of the project. An automatic warning system shall be incorporated into the equipment to indicate pressure drop or unit failure. Continuously monitor the pressure differential between the Regulated Area and surrounding area to ensure exhaust air filtration equipment maintains a minimum pressure differential of 0.02 inches of water column. The Contractor shall provide actual air flow measurement of filtration units while the unit is in place and calculate actual air exchange rates. No air movement system or air filtering equipment shall discharge unfiltered air outside the Regulated Area.

Negative pressure must be maintained in each work area during active abatement operations until the area achieves satisfactory verification criteria and is approved by the Project Monitor to be deregulated.

Conspicuously label and maintain emergency and fire exits from the Regulated Area satisfactory to fire officials.

Post warning signs at the airlock entrance to the regulated areas to deter unauthorized personnel from entering the work space.

(c) Exterior Engineering Controls

Exterior Engineering Controls shall generally follow those employed in the asbestos abatement industry for OSHA Class II exterior asbestos removal.

In lieu of the establishment of a negative pressure enclosure (NPE) system as described above, exterior removal operations will be conducted within an outdoor Regulated Area(s) as described below.

The ground adjacent to/beneath areas where PCB Bulk Products/Remediation Wastes will be removed are to be inspected for the presence of visual evidence of caulking debris or other evidence of PCB Bulk Product Presence and the bulk materials shall be removed using HEPA filtered vacuum equipment or wet methods as appropriate to collect all loose dust and debris which may contain PCB.

After pre-cleaning, movable objects shall be removed from the work areas. Fixed objects shall be enclosed with one layer of six (6) mil polyethylene sheeting sealed with tape.

Any building openings such as windows, doors, vents, etc. in the immediate vicinity of the exterior Remediation areas shall be sealed off with critical barriers consisting of a minimum of one (1) layer of six (6) mil polyethylene sheeting securing the edges with tape.

An exterior regulated area shall be established around the work area through the use of appropriately labeled barrier tape. The area shall be of sufficient size to keep non-remediation workers well away from the work activities and contain the release of any debris.

Ground surfaces in the regulated area shall be covered with two (2) layers of six (6) mil polyethylene sheeting to capture/collect any debris generated, and secured to prevent movement.

Signs shall be posted around the regulated area to deter unauthorized personnel from entering.

All power assisted/mechanical tools shall be equipped with HEPA cowled vacuum collection systems.

(d) Personnel Protection

The Contractor shall utilize all appropriate engineering controls and safety and protective equipment while performing the work in accordance with OSHA, USEPA, USDOT, CTDEP and CTDPH regulations.

The Contractor shall provide and require all workers to wear protective clothing in the Regulated Areas where PCBs will be encountered/disturbed. Protective clothing shall include impervious coveralls with elastic wrists and ankles, head covering, gloves and foot coverings.

Respiratory protection shall be provided and shall meet the requirements of OSHA as required in 29 CFR 1910.134. A formal respiratory protection program must be implemented in accordance with 29 CFR 1910.134. The Contractor shall provide respirators from among those approved as being acceptable for protection by the National Institute for Occupational Safety and Health (NIOSH) under the provisions of 30 CFR Part ll.

All other necessary personnel protective equipment (i.e. hardhat, work boots, safety glasses, hearing protection, etc.) required to perform the PCB abatement work activities shall conform to all applicable federal, state and local regulations.

All other qualified and authorized persons entering into a Regulated Area (i.e. Project Monitor, Regulatory Agency Representative) shall adhere to the requirements of personnel protection as stated in this section.

The Contractor shall establish remote to the Regulated Area, a Worker Decontamination Enclosure System consisting of Equipment Room, Shower Room and Clean Room in series.

The Clean Room shall be adequately sized to accommodate workers and shall be equipped with a suitable number of hooks, lockers, shelves, etc., for workers to store personal articles and clothing. Changing areas of the Clean Room shall be suitably screened from areas occupied by the public.

The Shower Room shall be of sufficient capacity to accommodate the number of workers. One shower stall shall be provided for each eight (8) workers. Showers shall be equipped with hot and cold or warm running water through the use of electric hot water heaters supplied by the Contractor.

(e) PCB Bulk Product & Remediation Waste Work Practices

The Abatement Site Supervisor, as the OSHA Competent Person shall be at the site at all times.

The Contractor shall not begin abatement work until authorized by the Project Monitor, following a pre-abatement visual inspection.

All workers and authorized persons shall enter and leave the Regulated Area through the contiguous airlock and proceed to the Worker Decontamination Enclosure System, leaving the outer set of contaminated protective clothing in the Airlock for disposal of as PCB waste.

No one shall eat, drink, smoke, chew gum or tobacco, or apply cosmetics while in a Regulated Area.

Removal work practices within the regulated areas shall be implemented with facilitate the removal of the PCB Bulk Product Waste and associated PCB Remediation Waste while also limiting the amount of dust and debris to be generated.

During removal, the Contractor shall spray mist PCB materials with water using airless spray equipment capable of providing a "mist" application to reduce the release of airborne dust/debris. Spray equipment shall be capable of generating sufficient pressure and volume. Hose length shall be sufficient to reach all of the Regulated Area. Do not “flood” the area with hose type water supply equipment with the potential to create water releases from the regulated area.

Rev. Date 04/01/10

In order to minimize airborne PCB concentrations inside the Regulated Area and minimize the potential for dust/debris release from the regulated area, the Contractor shall remove the adequately wetted PCBs in manageable sections. In addition, PCB materials removed from any elevated level shall be carefully lowered to the floor.

The Contractor shall promptly place the adequately wet PCB material in appropriate disposal containers as it is removed.

If at any time during PCB removal, the Project Monitor should suspect contamination of areas outside the Regulated Area, the Contractor shall immediately stop all abatement work and take steps to decontaminate these areas and eliminate causes of such contamination.

After completion of abatement work, the Contractor shall also remove and containerize all visible accumulations of dust and debris within the regulated area.

APPENDIX F

EPA Region 1 SOP

REGION I, EPA-NEW ENGLAND

DRAFT
STANDARD OPERATING PROCEDURE
FOR SAMPLING CONCRETE IN THE FIELD

U.S. EPA-NEW ENGLAND
Region I
Quality Assurance Unit Staff
Office of Environmental Measurement and Evaluation

Prepared by: Alan W Peterson **Date:** 12/30/97
Quality Assurance Chemist

Reviewed by: Andrew Beliveau **Date:** 12/30/97
Senior Technical Specialist

Approved by: Nancy Barmakian **Date:** 12/30/97
Branch Chief

DPW Project Number: BI-RT-843
Appendix #3
Addendum #6

Region I, EPA New England

Standard Operating Procedure for Sampling Concrete in the Field

Table of Contents

1.0 Scope and Application 3

2.0 Method Summary 3

3.0 Health and Safety 4

4.0 Interferences and Potential Problems 4

5.0 Equipment and Supplies 4
5.1 Single Depth Concrete Sampling 4
5.2 Multiple Depth Sampling 4

6.0 Sample Containers, Preservation, and Storage 5

7.0 Procedure 5
7.1 Single Depth Concrete Sampling 5
7.2 Multiple Depth Concrete Sampling 6
7.3 Decontamination Procedure 7

8.0 Field Documentation 7
8.1 Field Logbooks 8
8.2 Sample Labeling and Chain-of-Custody 8

9.0 Quality Assurance and Quality Control (QA/QC) 9
9.1 Equipment Blanks 9
9.2 Field Duplicates 9
9.3 Laboratory Duplicates 10
9.4 Matrix Spike/Matrix Spike Duplicate Samples 10
9.5 Performance Evaluation Samples 11
9.6 Data Verification and Validation 11
9.7 Audits 12

10.0 References 12

Region I, EPA New England

Standard Operating Procedure for Sampling Concrete in the Field

1.0 Scope and Application

The following Standard Operating Procedure (SOP) describes a concrete sampling technique which uses an impact hammer drill to generate a uniform, finely ground, powder which is easily homogenized, extracted and analyzed. This procedure is primarily geared at providing enough sample for one or two different analyses at a time. That is, the time required to generate sufficient sample for a full sweet of analyses may be impractical. The concrete powder is suitable for all types of environmental analyses, with the exception of volatile compounds, and may be analyzed in the field or at a fixed laboratory. This procedure is applicable for the collection of samples from concrete floors, walls, and ceilings.

The impact hammer drill is far less labor intensive than previous techniques using coring devices, or hammers and chisels. It allows for easy selection of sample location and sample depth. Not only can the project planner control the depth to sample into the concrete, from surface samples (0 - ½ inch) down to a core of the entire slab, but the technique can also be modified to collect samples at discrete depths within the concrete slab.

Another issue with concrete sampling is the fact that the amount of time spent drilling translates into the weight of sample produced. Thus, to maximize sampling time, it is important to know the minimum amount of sample required for each analysis. To do this, the project planner should take the following steps: 1) Use the Data Quality Objective (DQO) process and familiarity with the site to develop the objectives of the sampling project and the depth(s) of sample to be collected. 2) Review the site history and any previous data collected to determined possible contaminants of concern. 3) Establish the action levels for those possible contaminants and determine the appropriate analytical methods (both field and/or fixed laboratory) to meet the DQOs of the project. 4) Based on the detection limits of these methods, determine the amount of sample required for each analysis and the total sample weight require for each sample location (including quality control samples).

As with any environmental data collection project, all aspects of a concrete sampling episode should be well thought out, prior to going out in the field, and thoroughly described in a Quality Assurance Project Plan (QAPP). The QAPP should clearly state the DQOs of the project and document a complete Quality Assurance/Quality Control program to reconcile the data generated with the established DQOs. For more information on these subjects, refer to EPA documents QA/R-5, EPA Requirements for Quality Assurance Project Plans for Environmental Data Operations, and QA/G-4, Guidance for the Data Quality Objective Process.

2.0 Method Summary

A one-inch diameter carbide drill bit is used in a rotary impact hammer drill to generate a fine concrete powder suitable for analysis. The powder is placed in a sample container and homogenized for field or fixed laboratory analysis. The procedure can be used to sample a single depth into the concrete, or may be modified to sample the concrete at distinctly different depth zones. The modified depth sampling procedure is designed to minimize any cross contamination between the sampling zones. If different

sampling depths are required, two different diameter drill bits and a vacuum sampling apparatus are employed.

3.0 Health and Safety

Eye and hearing protection are required at all times during sample drilling. A small amount of dust is generated during the drilling process. Proper respiratory protection and/or a dust control system must be in place at all times during sampling.

4.0 Interferences and Potential Problems

Since this sampling technique produces a finely ground uniform powder, physical matrix effects from variations in the sample consistency (i.e., particle size, uniformity, homogeneity, and surface condition) are minimized. Matrix spike analysis of a sample is highly recommended to monitor for any matrix related interferences.

As stated in Section 1.0 above, this sampling procedure is not recommended for volatile organic compound (VOC) analysis. The combination of heat generated during drilling and the exposure of a large amount of surface area will greatly reduce VOC recovery. If low boiling point semi-volatile compounds (i.e., naphthalene) are being analyzed, then the drill speed should be reduced to minimize heat build-up.

5.0 Equipment and Supplies

5.1 Single Depth Concrete Sampling

5.1.1 Rotary impact hammer drill
5.1.2 1-inch diameter carbide drill bits
5.1.3 Stainless steel scoopulas
5.1.4 Stainless steel spoonulas (for collecting sample in deeper holes, >2-inches)
5.1.5 Rectangular aluminum pans (to catch concrete during wall and ceiling sampling)
5.1.6 Gasoline powered generator (if alternative power source is required)

5.2 Multiple Depth Sampling (in addition to all the above)

5.2.1 ½ inch diameter carbide drill bits
5.2.2 Vacuum/sample trap assembly (see Section 7.2 and Figure 1)

5.2.2.1 Vacuum pump
5.2.2.2 2-hole rubber stopper
5.2.2.3 Glass tubing (to fit stopper)
5.2.2.4 Large glass test tubes, or Erlenmeyer flasks, for sample trap (several are suggested)
5.2.2.5 Polyethylene tubing for trap inlet (Tygon tubing may be used for the trap outlet)
5.2.2.6 Pasture pipets
5.2.2.7 Pipe cleaners
5.2.2.8 In-line dust filter (glass fiber filter, or equivalent)

6.0 Sample Containers, Preservation, and Storage

Concrete samples must be collected in glass containers for organic analyses, and may be collected in either glass or plastic containers for inorganic analyses. In general, a 2-ounce sample container with Teflon-lined cap (wide-mouth jars are preferred) will hold sufficient volume for most analyses. A 2-ounce jar can hold roughly 90 grams sample. Note, samples which require duplicate and/or matrix spike/matrix spike duplicate analyses may require a larger sample container, or additional 2-ounce sample containers.

Organic samples are to be shipped on ice and maintained at 4°C (± 2°C) until the time of extraction and analysis. Inorganic samples may be shipped and stored at room temperature. Refer to 40 CFR Part 136 for guidelines on analysis holding times.

To maintain sample integrity, chain-of-custody procedures must be implemented at the time of sampling to 1) document all sample locations and associated field sample identification numbers, 2) document all quality control samples taken, including field duplicates, split samples for confirmatory analyses, and PE samples, and 3) document the transfer of field samples from field sampler to field chemist or fixed laboratory.

7.0 Procedure

7.1 Single Depth Concrete Sampling

Lock a 1-inch diameter carbide drill bit into the impact hammer drill and plug the drill into an appropriate power source. (A gasoline generator will be needed if electricity is not available.) For easy identification, sample locations may be pre-marked using a crayon or a non-contaminating spray paint. (Note, the actual drilling point must not be marked.) Depending on the appearance of the sample location, or the objectives of the sampling project, it may be desired to wipe the concrete surface with a clean dry cloth prior to drilling. All sampling decisions of this nature should be noted in the sampling logbook. Begin drilling in the designated location. Apply steady even pressure and let the drill do the work. Applying too much pressure will generate excessive heat and dull the drill bit prematurely. The drill will provide a finely ground concrete powder that can be easily collected, homogenized and analyzed. Having several decontaminated impact drill bits on hand will help expedite sampling when numerous sample locations are to be drilled.

<u>Sample Collection</u>

A ½-inch deep hole (using a 1-inch diameter drill bit) generates about 10 grams of concrete powder. Based on this and the action levels for the project, determine the sampling depth, and/or the number of sample holes to be composited, to generate sufficient sample volume for all of the required analyses. (Note, with the absorbency of concrete, a ½-inch deep hole can be considered a surface sample.)

A decontaminated stainless steel scoopula can be used to collect the sample. The powder can either be collected directly from the surface of the concrete and/or the concrete powder can be scraped back into the hole and the less rounded back edge of the scoopula can be used to collect the sample. For holes greater than 2-inches in depth, a stainless steel spoonula will make it easier to collect the sample from the bottom of the hole.

To ensure collection of a representative sample when multiple analyses are required, a concrete sample should always be collected and homogenized in a single container and then divided up into the individual containers for the various analyses or split samples. This is particularly important when sample holes are deep, or when several holes are drilled adjacent to each other to form a sample composite.

Wall and Ceiling Sampling

A team of two samplers will be required for wall and ceiling sampling. The second person will be needed to hold a clean catch surface (i.e., an aluminum pan) below the drill to collect the falling powder. For wall samples, a scoopula, or spoonula, can be used to collect remaining concrete powder from within the hole. For ceiling holes, it may be necessary to drill the hole at an angle so the concrete powder can fall freely in the collection plan (and avoid falling on the drill). Another alternative might be to use the chuck-end of the drill bit and punch a hole through the center of the collection pan. The drill bit is then mounted through the pan and into the drill. Thus, the driller can be drilling straight up while the assistant steadies the pan to catch the falling dust. As a precaution, it may be advantageous to tape a piece of plastic around the drill, just below the chuck, to avoid dust contaminating the body of the drill and entering the mechanical vents. (Note, the plastic should deflect dust from the drill, but be loose enough underneath to allow for proper ventillation.)

7.2 Multiple Depth Concrete Sampling

The above method for concrete sampling can also be used to collect samples from different depths within the concrete. To do this, two different sized drill bits (i.e., ½ inch and 1 inch) and a simple vacuum pump with a vacuum trap assembly is required (see Figure 1). First, the 1 inch drill bit is used to drill to the first level and the concrete sample is collected as described in Section 7.1. The vacuum pump is then turned on and the hole is cleaned out using the vacuum trap assembly. The drill bit is then changed to the ½ inch bit and the next depth is drilled out (the ½ inch bit is used to avoid contact with the sides of the first hole). A clean tube or flask is placed on the vacuum trap, and the sample from the second drilling is collected. To go further, the 1 inch drill is used to open up the hole to the second level, the hole is cleared, and then the ½ inch drill is used again to go to a third level, etc. Note, the holes and concrete surface should be vacuumed thoroughly to minimize any cross-contamination between sample depths.

Vacuum Trap Design and Clean-out

The trap presented in Figure 1 is a convenient and thorough way for collecting and removing concrete powder from drilled holes. The trap system is designed to allow for control of the suction from the vacuum pump and easy trap clean-out between samples. Note, by placing a hole in the inlet tube (see Figure 1), a finger on the hand holding the trap can be used to control the suction at the sampling tip. Thus, when this hole is left completely open, there will be no suction, and the sampler can have complete control over where and what to sample. To change-out between samples the following steps should be taken: 1) The pasture pipet and piece of polyethylene tubing at the sample inlet should be replaced with new materials, 2) the portion of the rubber stopper and glass tubing that was in the trap should be wiped down with a clean damp paper towel (wetted with deionized water) and then dried with a fresh paper towel, 3) a clean pipe cleaner should be drawn through the glass inlet tube to remove any concrete dust present, and 4) the glass tube or flask used to collect the sample should swapped out with a clean decontaminated sample trap. Having several clean tubes or flasks on hand will facilitate change-out between samples.

Figure 1

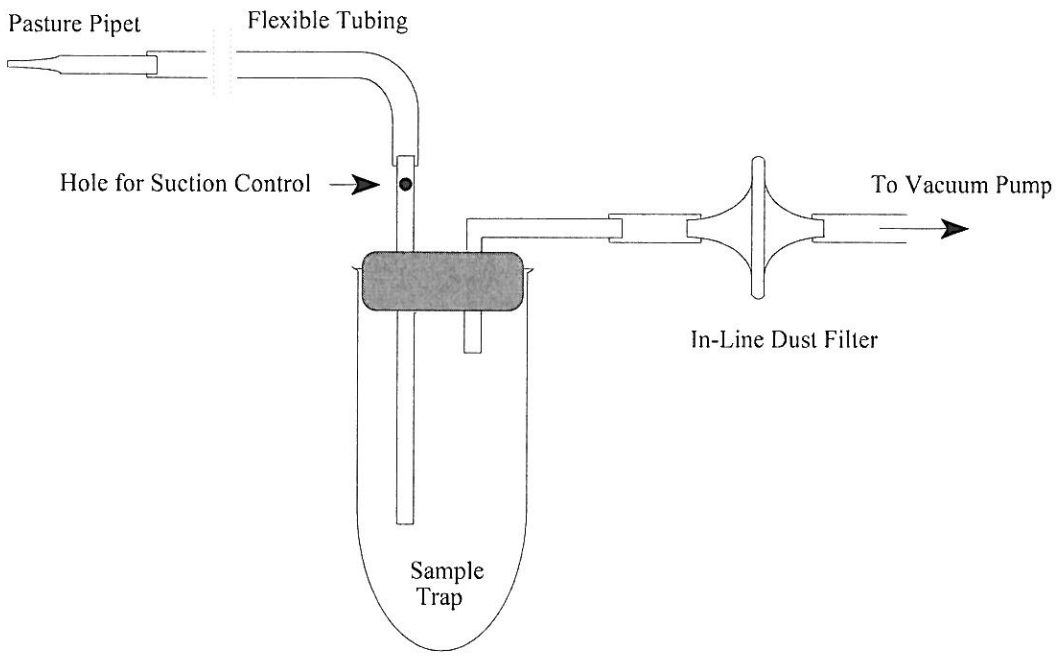

7.3 Decontamination Procedure

Necessary supplies for decontamination include: two small buckets, a scrub brush, potable water, deionized water, a squirt bottle for the deionized water, and paper towels. The first bucket contains a soap and potable water solution, and the second bucket contains just potable water. Place all used drill bits and utensils in the soap and water bucket. Scrub each piece thoroughly using the scrub brush. Note, the concrete powder does cling to the metal surfaces, so care should be taken during this step, especially with the twists and curves of the drill bits. Next, rinse each piece in the potable water bucket, and follow with a deionized water rinse from the squirt bottle. Place the deionized water rinsed pieces on clean paper towels and individually dry and inspect each piece. Note, all pieces should be dry prior to reuse.

8.0 Field Documentation

All Site related documentation and reports generated from concrete sampling should be maintained in the central Site file. If personal logbooks are used, legible copies of all pertinent pages must be placed in the Site file.

8.1 Field Logbooks

All field documentation should be maintained in bound logbooks with numbered pages. If loose-leaf logsheets are used to document site activities, extra care should be taken in keep track of all logsheets. The original copy of all logsheets should be maintained in the central Site file. Note, all sample locations must be documented by tying in their location to a detailed site map, or by using two or more permanent landmarks. The following information should be documented in the field logbooks:

- Site name and location,
- EPA Site Manager,
- Name and affiliation of field samplers (EPA, Contractor company name, etc.),
- Sampling date,
- Sample locations and IDs,
- Sampling times and depths, and
- Other pertinent information or comments

8.2 Sample Labeling and Chain-of-Custody

8.2.1 Sample Labels

Sample labels will be affixed to all sample containers. Labels must contain the following information:

- Project name,
- Sample number, and/or location
- Date and time of sampling,
- Analysis,
- Preservation, and
- Sampler's name.

8.2.2 Chain-of-Custody

All samples must be traced from collection, to shipment, to laboratory receipt and laboratory custody. The Chain-of-Custody (COC) Record is a multi-part form that is initiated as samples are acquired and accompanies a sample (or group of samples) as they are transferred from person to person. The COC form is signed by all individuals responsible for sampling, sample transport, and laboratory receipt. (Note, overnight deliver services, often used with sample transport, are exempt from having to sign the COC form. However, copies of all shipping invoices must be kept with the COC documentation.) One copy of the COC is retained by the field sampling crew, while the original (top, signed copy) and remaining carbonless copies are placed in a zip-lock bag and taped to the inside lid of the shipping cooler. If multiple coolers are required for a sample shipment to a single laboratory, the COC need only be sent with one of the coolers. The COC should state how many coolers are included with the shipment. All sample shipments to different laboratories require individual COC forms. The original COC form accompanies the samples until the project is complete, and is then kept in the permanent project file. A copy of the COC is also kept with the project manager, the laboratory manager, and attached to the data package.

8.2.3 Custody Seal

The Custody seal is an adhesive-backed label which is also part of the chain-of-custody process. The custody seal is used to prevent tampering with the samples after they have been collected in the field and sealed in coolers for transit to the laboratory. The Custody seals are signed and dated by a sampler and affixed across the opening edges of each cooler containing samples. Clear packing tape should be wrapped around the cooler, and over the Custody seal, to secure the cooler and avoid accidental tampering with the Custody seal.

9.0 Quality Assurance and Quality Control (QA/QC)

A solid QA/QC program is essential to establishing the quality of the data generated so that proper project decisions can be made. The following are key quality control elements which should be incorporated into a concrete sampling and analytical program.

9.1 Equipment Blanks

An equipment blank should be performed on decontaminated drill bits and collection utensils at a frequency of 1 per 20 samples or 1 per day, whichever is greater. To prepare the equipment blank, place the decontaminated drill bit and utensils in a large clean stainless steel bowl. Pour sufficient deionized water into the bowl to fill all of the required sample containers. Next, stir the drill bit and utensils in the bowl with a clean utensil to thoroughly mix the blank. Finally, decant off the equipment blank into the sample containers. Note, a clean funnel may help to pour off the equipment blank into the containers.

9.2 Field Duplicates

Field duplicates are samples collected adjacent to each other (collocated) at the same sample location (not two aliquots of the same sample). Field duplicates not only help provide an indicator of overall precision, but measure the cumulative effects of both the field and analytical precision, and also measure the representativeness of the sample. Field duplicates must be prepared and analyzed at a frequency of 1 per 20 samples or 1 per non-related concrete matrix, whichever is greater. An example of a non-related concrete matrix might be the investigation of two different types of chemical spills.

Calculate the Relative Percent Difference (RPD) between the sample and its duplicate using Equation 1.

Equation 1

$$RPD = \frac{|S - D|}{\frac{(S + D)}{2}} \times 100$$

Where:

S = Original sample result
D = Duplicate sample result

The following general guidelines have been established for field duplicate criteria:

- If both the original and field duplicate values are ≥ practical quantitation limit (PQL), then the control limit for RPD is ≤50%,
- If one or both values are < PQL, then do not assess the RPD.

If more rigorous field duplicate criteria are needed to achieve project DQOs, then that criteria should be documented in the project QAPP.

If the field duplicate criteria specified above are not met, then flag that target element with an "*" on the final report for both the original and field duplicate samples. Report both the original and field duplicate analyses; do not report the average. Field duplicate samples should should be indicated on the sample ID. For example, the sample ID can contain the the suffix "FD".

9.3 Laboratory Duplicates

Laboratory duplicates are two aliquots of the same sample that are prepared, homogenized and analyzed in the same manner. (Note, proper sample homogenization is critical in producing meaningful results.) The precision of the sample preparation and analytical methods is determined by performing a laboratory duplicate analysis. Laboratory duplicates can be prepared in the field and submitted as blind samples, or the laboratory can be requested to perform the laboratory duplicate analysis. In the case of laboratory prepared duplicates, the field sampling team must be sure to provide sufficient sample volume. Laboratory duplicates must be prepared and analyzed at a frequency of 1 per 20 samples or 1 per non-related concrete matrix, whichever is greater.

Calculate the RPD between the sample and its duplicate using Equation 1. The following general guidelines have been established for laboratory duplicate criteria:

- If both the original and laboratory duplicate values are ≥ PQL, then the control limit for RPD is ≤25%,
- If one or both values are < PQL, then do not assess the RPD.

If duplicate criteria are not met, then flag that target element with an "*" on the final report for both the original and duplicate samples. Report both the original and duplicate analyses; do not report the average.

9.4 Matrix Spike/Matrix Spike Duplicate Samples

Matrix spike/matrix spike duplicate samples (MS/MSDs) are two additional aliquots of a sample which are spiked with the appropriate compound(s) or analyte(s) of concern and then prepared and analyzed along with the original sample. (Note, proper sample homogenization, prior to spiking, is critical in producing meaningful results.) MS/MSDs help evaluate the effects of sample matrix on the analytical methods being used. The field sampling team must provide sufficient sample volume such that the field or fixed laboratory can prepare and analyze MS/MSDs at a frequency of 1 per 20 samples or 1 per non-related concrete matrix, whichever is greater.

Calculate the recovery of each matrix spike compound or analyte using Equation 2.

Equation 2

$$MSR = \frac{SSR - SR}{SA} x\ 100$$

Where,

MSR	=	Matrix Spike Recovery,	SA	=	Spike Added
SSR	=	Spiked Sample Result,	SR	=	Sample Result

Calculate the relative percent difference (RPD) between the recoveries of each compound or analyte in the matrix spike and matrix spike duplicate using Equation 3.

Equation 3

$$RPD = \frac{|\ MSR - MSRD\ |}{\frac{(MSR + MSRD)}{2}} x\ 100$$

Where,

MSR = Matrix Spike Recovery
MSRD = Matrix Spike Duplicate Recovery

9.5 Performance Evaluation Samples

In accordance with the EPA Region I Performance Evaluation Program Guidance, performance evaluation (PE) samples should be submitted for each type of analysis to be performed in the field or by the fixed laboratory performing full protocol EPA methods. PE samples provide information on the quality of the individual data packages. PE samples are certified standard reference materials (SRMs) from a source other than that used to calibrate the instrument. If both field and fixed laboratories are being used to analyze samples, at least one solid PE sample should undergo both field analysis and confirmatory full protocol EPA method analysis to facilitate data comparability. A copy of the certified values for the SRM must be submitted with the final data packages to facilitate data evaluation.

9.6 Data Verification and Validation

All field data and supporting information (including chain-of-custody) that is collected during a concrete sampling episode should be verified daily, by a person other than that performing the work, to check for possible errors.

During the project planning process, a plan for data validation should be established for all data, both for field and fixed laboratories. All data must be validated to assure that it is of a quality suitable to make project decisions. For help in developing a data validation program refer to Region I, EPA New England, Data Validation Functional Guidelines for Evaluating Environmental Analyses.

9.7 Audits

9.7.1 Internal Audits

As part of the Quality Assurance/Quality Control Program for any sampling project, a series of internal audit checks should be instituted to monitor and maintain the integrity of the sample collection process. Timely internal reviews will insure that proper sampling, decontamination, chain-of-custody and quality control procedures are being followed. Also, the internal audit review is there to monitor any corrective actions taken, and/or institute corrective actions that should have been taken and were not. All corrective actions taken must be documented in an appropriate logbook, and if any corrective actions impact the final data reported, then they must also be documented in the final report narrative. The results of all internal audits must be documented in a report, and copies of the report issued to the Project Manager and the Quality Assurance Manager. The original copy of any audit report must remain with the main project file and be available for review.

9.7.2 External Audits

The Agency reserves the right to perform periodic field audits to ensure compliance with this SOP.

10.0 References

1) Guidance for the Data Quality Objective Process, QA/G-4, EPA/600/R-96/055, September 1994.

2) EPA Requirements for Quality Assurance Project Plans for Environmental Data Operations, QA/R-5, Interim Final, October 1997.

3) Guidance for the Preparation of Standard Operating Procedures for Quality-related Operations, QA/G-6, EPA/600/R-96/027, November 1995.

4) Region I, EPA-New England Data Validation Functional Guidelines for Evaluating Environmental Analyses, July 1996.

5) EPA Region I Performance Evaluation Program Guidance, July 1996.

6) U.S. EPA Code of Federal Regulations, 40 CFR, Part 136, Appendix B, Revised as of July 1995.

APPENDIX G

Notification and Certification

STATE OF CONNECTICUT

DEPARTMENT OF PUBLIC WORKS

Raeanne V. Curtis
Commissioner

Via Mail

July 5, 2010

Kimberly N. Tisa
Region 1 PCB Administrator
United States Environmental Protection Agency
1 Congress Street, Suite 1100-CPT
Boston, MA 02114-2023

Re: Notification and Certification Pursuant to 40 CFR 761.61(a)(3)(i)(E)
Self-Implementing Cleanup Plan for H.C. Wilcox Technical High School
298 Oregon Road, Meriden, CT

Dear Ms. Tisa:

Attached is a copy of the remedial plan developed to address PCB-containing building materials at the H.C Wilcox Technical High School for review by EPA. Implementation of this plan will allow for the safe removal and proper disposal of PCB-containing materials prior to the demolition and renovation of structures located at the site. This letter and the attached remedial plan constitute the notification required to federal authorities at least 30 days prior to the date of initiating remediation under §761.61(a)(3)(i). Work will not commence without having received approval from US Environmental Protection Agency (EPA). This letter and attached remedial plan will also be forwarded to state officials at the Connecticut Departments of Environmental Protection (CTDEP) and Public Health (CTDPH), and the City of Meriden Mayor to satisfy requirements for notification of state and local officials.

This certification is to accompany the Self-Implementing Cleanup Plan for the removal and abatement of building materials and soil remediation work to be performed prior to and during renovation and demolition of structures at the site. The contract for this work shall be administered by the Connecticut Department of Public Works (CTDPW). The site is owned by the Connecticut Department of Education (CTDOE). TRC Environmental (TRC) has prepared this plan under the provisions specified in §§761.61(c) and 761.61(a) for the remedial work to be performed at the site.

Certification Pursuant to 40 CFR 761.61(a)(3)(i)(E)

I certify that all sampling plans, sample collection procedures, sample preparation procedures, extraction procedures, and instrumental/chemical analysis procedures used to

DPW Project Number: BI-RT-843
Appendix #3
Addendum #6

assess or characterize the PCB contamination at the cleanup site are on file at the offices of TRC Environmental, 21 Griffin Road North, Windsor, Connecticut, and are available for EPA inspection.

If you have any questions you may contact Jeff Bolton at 860-713-5706 or via email at jeffrey.bolton@ct.gov.

Sincerely,

Allen V Herring

Allen V. Herring, P.E.
Chief Engineer
Connecticut Department of Public Works

cc: Lori Saliby, CTDEP
Gary Trombly, CTDEP
Brian Toal, CTDPH
John Woodmansee, CTDOE
Al Richmond, CTDOE
Barbara Cosgrove, CTDPW
Joseph Cassidy, CTDPW
Jeffrey Bolton, CTDPW
Richard Cavallaro, Principal, H.C. Wilcox Technical High School
Michael S. Rohde, Mayor, City of Meriden

Attachments

ADDITIONS AND RENOVATIONS
HC WILCOX REGIONAL VOCATIONAL TECHNICAL SCHOOL
298 OREGON ROAD
MERIDEN, CONNECTICUT
PROJECT: BI- RT - 843

BID OPENING	**1:00 P.M.**	**SEPTEMBER 15, 2010**
ADDENDUM NUMBER 5	**DATE OF ADDENDUM**	**JULY 29, 2010**

The following clarifications are applicable to drawings and specifications for the project referenced above.

Item 1

Delete Section 00 73 44 (Prevailing Wage Rates/Contractor's Wage Certification/Payroll Certification) pages 1-29 dated As of May 6, 2010 in its entirety and replace with the new Section 00 73 44 (Prevailing Wage Rates/Contractor's Wage Certification/Payroll Certification) pages 1-31 dated as of July 28, 2010.

All questions must be in writing (not phone or e-mail) and must be forwarded to the consulting Architect/Engineer (Randall Luther, Tia Soo Kim Partners, LLC, Fax 860-249-0695) with copies sent to the DPW Project Manager (Barbara Cosgrove, Fax 860-713-7270).

End of Addendum Number Five

Gail Blythe

Gail Blythe, Associate Fiscal Administrative Officer
Department of Public Works

Minimum Rates and Classifications
for Building Construction

Connecticut Department of Labor
Wage and Workplace Standards Division

By virtue of the authority vested in the Labor Commissioner under provisions of Section 31-53 of the General Statutes of Connecticut, as amended, the following pages are declared to be the prevailing rates and welfare payments and will apply only where the contract is advertised for bid within 20 days of the date on which the rates are established. Any contractor or sub-contractor not obligated by agreement to pay to the welfare and pension fund shall pay this amount to each employee as part of his hourly wage.

Project Number: BI-RT-843 **Project Town: Meriden, Connecticut**

Project: Additions and Renovations, HC Wilcox Regional Vocational Technical School, 298 Oregon Road, Meriden, Connecticut

The following pages contain:

Contractors Wage Certification Form	1 page
Notice to all Mason Contractors reference Section 31-53 of C.GS. (Prevailing Wages)	1 page
Prevailing Wage Rates - English	14 pages
Informational Bulletin - **Occupational Classifications**	6 pages
Informational Bulletin – **The 10-Hour OSHA Construction Safety and Health Course**	2 pages
Footnotes	2 pages
Special Notice re Wage Rate Adjustments	1 pages
Weekly Payroll Certification Form (WWS-CP1)	1 page
Fringe Benefits Explanation (P)	1 page
Weekly Payroll Certification Form (WWS-CP2)	1 page

As of: July 28, 2010

CONNECTICUT DEPARTMENT OF LABOR
WAGE AND WORKPLACE STANDARDS DIVISION

CONTRACTORS WAGE CERTIFICATION FORM

I,_____of _____
Officer, Owner, Authorized Rep. Company Name

do hereby certify that the _____
Company Name

_____
Street

_____
City

and all of its subcontractors will pay all workers on the

_____
Project Name and Number

_____
Street and City

the wages as listed in the schedule of prevailing rates required for such project (a copy of which is attached hereto).

_____
Signed

Subscribed and sworn to before me this _____ day of _____,_____.

_____
Notary Public

Return to:

Connecticut Department of Labor
Wage & Workplace Standards Division
200 Folly Brook Blvd.
Wethersfield, CT 06109

Rate Schedule Issued (Date): _____

November 29, 2006

Notice

To All Mason Contractors and Interested Parties Regarding Construction Pursuant to Section 31-53 of the Connecticut General Statutes (Prevailing Wage)

The Connecticut Labor Department Wage and Workplace Standards Division is empowered to enforce the prevailing wage rates on projects covered by the above referenced statute.

Over the past few years the Division has withheld enforcement of the rate in effect for workers who operate a forklift on a prevailing wage rate project due to a potential jurisdictional dispute.

The rate listed in the schedules and in our Occupational Bulletin (see enclosed) has been as follows:

Forklift Operator:

- **Laborers (Group 4) Mason Tenders** - operates forklift solely to assist a mason to a maximum height of nine feet only.

- **Power Equipment Operator (Group 9)** - operates forklift to assist any trade and to assist a mason to a height over nine feet.

The U.S. Labor Department conducted a survey of rates in Connecticut but it has not been published and the rate in effect remains as outlined in the above Occupational Bulletin.

Since this is a classification matter and not one of jurisdiction, effective January 1, 2007 the Connecticut Labor Department will enforce the rate on each schedule in accordance with our statutory authority.

Your cooperation in filing appropriate and accurate certified payrolls is appreciated.

Minimum Rates and Classifications
for Building Construction
B 14074

Connecticut Department of Labor
Wage and Workplace Standards Division

By virtue of the authority vested in the Labor Commissioner under provisions of Section 31-53 of the General Statutes of Connecticut, as amended, the following are declared to be the prevailing rates and welfare payments and will apply only where the contract is advertised for bid within 20 days of the date on which the rates are established. Any contractor or subcontractor not obligated by agreement to pay to the welfare and pension fund shall pay this amount to each employee as part of his/her hourly wages.

Project Number BI-RT-843 Project Town Meriden
State#: FAP#

Project: Additions And Renovations To HC Wilcox Regional Vocational Technical School

CLASSIFICATION	Hourly Rate	Benefits
1a) Asbestos Worker/Insulator (Includes application of insulating materials, protective coverings, coatings, & finishes to all types of mechanical systems; application of firestopping material for wall openings & penetrations in walls, floors, ceilings - Last updated 9/1/08	34.21	19.81
1b) Asbestos/Toxic Waste Removal Laborers: Asbestos removal and encapsulation (except its removal from mechanical systems which are not to be scrapped), toxic waste removers, blasters.**See Laborers Group 7**		
2) Boilermaker	34.94	19.00

As of: **Wednesday, July 28, 2010**

Project: Additions And Renovations To HC Wilcox Regional Vocational Technical School

3a) Bricklayer, Cement Mason, Concrete Finisher (including caulking), Stone Masons	32.43	21.19 + a
3b) Tile Setter	32.43	21.19
3c) Terrazzo Workers, Marble Setters - Last updated 10/1/08	30.91	19.12
3d) Tile, Marble & Terrazzo Finishers	32.43	21.19
3e) Plasterer	32.43	21.19

------LABORERS------

As of: **Wednesday, July 28, 2010**

Project: Additions And Renovations To HC Wilcox Regional Vocational Technical School

4) Group 1: Laborers (common or general), carpenter tenders, wrecking laborers, fire watchers.	25.00	15.00
4a) Group 2: Mortar mixers, plaster tender, power buggy operators, powdermen, fireproofer/mixer/nozzleman, fence erector.	25.25	15.00
4b) Group 3: Jackhammer operators, mason tender (brick) and mason tender (cement/concrete)	25.50	15.00
4c) **Group 4: Pipelayers (Installation of water, storm drainage or sewage lines outside of the building line with P6, P7 license) (the pipelayer rate shall apply only to one or two employees of the total crew who primary task is to actually perform the mating of pipe sections)[If using this classification call the Labor Department for clarification]	26.00	15.00
4d) Group 5: Air track operators, Sand blasters	25.75	15.00
4e) Group 6: Nuclear toxic waste removers, blasters	28.00	15.00

As of: **Wednesday, July 28, 2010**

Project: Additions And Renovations To HC Wilcox Regional Vocational Technical School

4f) Group 7: Asbestos removal and encapsulation (except it's removal from mechanical systems which are not to be scrapped)	26.00	15.00
4g) Group 8: Bottom men on open air caisson, cylindrical work and boring crew	25.50	15.00
4h) Group 9: Top men on open air caisson, cylindrical work and boring crew	25.00	15.00
5) Carpenter, Acoustical Ceiling Installation, Soft Floor/Carpet Laying, Metal Stud Installation, Form Work and Scaffold Building, Drywall Hanging, Modular-Furniture Systems Installers, Lathers, Piledrivers, Resilient Floor Layers.	29.03	18.57
5a) Millwrights	29.78	18.61
6) Electrical Worker (including low voltage wiring) (Trade License required: E1,2 L-5,6 C-5,6 T-1,2 L-1,2 V-1,2,7,8,9)	35.20	20.51

As of: **Wednesday, July 28, 2010**

Project: Additions And Renovations To HC Wilcox Regional Vocational Technical School

7a) Elevator Mechanic (Trade License required: R-1,2,5,6)	43.57	20.035+a+b

-----LINE CONSTRUCTION----

Groundman	22.67	6.50% + 6.20
Linemen/Cable Splicer	41.22	6.5% + 12.20
8) Glazier (Trade License required: FG-1,2)	31.73	14.55 + a
9) Ironworker, Ornamental, Reinforcing, Structural, and Precast Concrete Erection	33.00	26.58 + a

As of: **Wednesday, July 28, 2010**

Project: Additions And Renovations To HC Wilcox Regional Vocational Technical School

----OPERATORS----

Group 1: Crane handling or erecting structural steel or stone, hoisting engineer 2 drums or over, front end loader (7 cubic yards or over); work boat 26 ft. and over. (Trade License Required)	35.05	18.60 + a
Group 2: Cranes (100 ton rate capacity and over); Backhoe/Excavator over 2 cubic yards; Piledriver ($3.00 premium when operator controls hammer). (Trade License Required)	34.73	18.60 + a
Group 3: Excavator; Backhoe/Excavator under 2 cubic yards; Cranes (under 100 ton rated capacity), Grader/Blade; Master Mechanic; Hoisting Engineer (all types of equipment where a drum and cable are used to hoist or drag material regardless of motive power of operation), Rubber Tire Excavator (Drott-1085 or similar);Grader Operator; Bulldozer Fine Grade. (slopes, shaping, laser or GPS, etc.).	33.99	18.60 + a
Group 4: Trenching Machines; Lighter Derrick; Concrete Finishing Machine; CMI Machine or Similar; Koehring Loader (Skooper).	33.60	18.60 + a
Group 5: Specialty Railroad Equipment; Asphalt Paver; Asphalt Reclaiming Machine; Line Grinder; Concrete Pumps; Drills with Self Contained Power Units; Boring Machine; Post Hole Digger; Auger; Pounder; Well Digger; Milling Machine (over 24" Mandrell)	33.01	18.60 + a

As of: **Wednesday, July 28, 2010**

Project: Additions And Renovations To HC Wilcox Regional Vocational Technical School

Group 5 continued: Side Boom; Combination Hoe and Loader; Directional Driller; Pile Testing Machine.	33.01	18.60 + a
Group 6: Front End Loader (3 up to 7 cubic yards); Bulldozer (rough grade dozer).	32.70	18.60 + a
Group 7: Asphalt roller, concrete saws and cutters (ride on types), vermeer concrete cutter, Stump Grinder; Scraper; Snooper; Skidder; Milling Machine (24" and under Mandrell).	32.36	18.60 + a
Group 8: Mechanic, grease truck operator, hydroblaster; barrier mover; power stone spreader; welding; work boat under 26 ft.; transfer machine.	31.96	18.60 + a
Group 9: Front end loader (under 3 cubic yards), skid steer loader regardless of attachments, (Bobcat or Similar): forklift, power chipper; landscape equipment (including Hydroseeder).	31.53	18.60 + a
Group 10: Vibratory hammer; ice machine; diesel and air, hammer, etc.	29.49	18.60 + a

As of: **Wednesday, July 28, 2010**

Project: Additions And Renovations To HC Wilcox Regional Vocational Technical School

Group 11: Conveyor, earth roller, power pavement breaker (whiphammer), robot demolition equipment.	29.49	18.60 + a
Group 12: Wellpoint operator.	29.43	18.60 + a
Group 13: Compressor battery operator.	28.85	18.60 + a
Group 14: Elevator operator; tow motor operator (solid tire no rough terrain).	27.71	18.60 + a
Group 15: Generator Operator; Compressor Operator; Pump Operator; Welding Machine Operator; Heater Operator.	27.30	18.60 + a
Group 16: Maintenance Engineer/Oiler.	26.65	18.60 + a

As of: **Wednesday, July 28, 2010**

Project: Additions And Renovations To HC Wilcox Regional Vocational Technical School

Group 17: Portable asphalt plant operator; portable crusher plant operator; portable concrete plant operator.	30.96	18.60 + a
Group 18: Power safety boat; vacuum truck; zim mixer; sweeper; (Minimum for any job requiring a CDL license).	28.54	18.60 + a

------PAINTERS (Including Drywall Finishing)------

10a) Brush and Roller	28.17	14.55
10b) Taper/Drywall Finisher	28.92	14.55
10c) Paperhanger and Red Label	28.67	14.55

As of: **Wednesday, July 28, 2010**

Project: Additions And Renovations To HC Wilcox Regional Vocational Technical School

10e) Spray	31.17	14.55
11) Plumber (excluding HVAC pipe installation) (Trade License required: P-1,2,6,7,8,9 J-1,2,3,4 SP-1,2)	37.62	22.51
12) Well Digger, Pile Testing Machine	33.01	18.60 + a
13) Roofer (composition)	31.10	15.31
14) Roofer (slate & tile)	31.60	15.31
15) Sheetmetal Worker (Trade License required for HVAC and Ductwork: SM-1,SM-2,SM-3,SM-4,SM-5,SM-6)	31.88	27.63

As of: **Wednesday, July 28, 2010**

Project: Additions And Renovations To HC Wilcox Regional Vocational Technical School

16) Pipefitter (Including HVAC work) (Trade License required: S-1,2,3,4,5,6,7,8 B-1,2,3,4 D-1,2,3,4, G-1, G-2, G-8 & G-9)	37.62	22.51

------TRUCK DRIVERS------

17a) 2 Axle	27.88	14.53 + a
17b) 3 Axle, 2 Axle Ready Mix	27.98	14.53 + a
17c) 3 Axle Ready Mix	28.03	14.53 + a
17d) 4 Axle, Heavy Duty Trailer up to 40 tons	28.08	14.53 + a

As of: **Wednesday, July 28, 2010**

Project: Additions And Renovations To HC Wilcox Regional Vocational Technical School

17e) 4 Axle Ready Mix	28.13	14.53 + a
17f) Heavy Duty Trailer (40 Tons and Over)	28.33	14.53 + a
17g) Specialized Earth Moving Equipment (Other Than Conventional Type on-the-Road Trucks and Semi-Trailers, Including Euclids)	28.13	14.53 + a
18) Sprinkler Fitter (Trade License required: F-1,2,3,4)	40.50	16.85 + a

As of: **Wednesday, July 28, 2010**

Project: Additions And Renovations To HC Wilcox Regional Vocational Technical School

Welders: Rate for craft to which welding is incidental.

**Note: Hazardous waste removal work receives additional $1.25 per hour for truck drivers.*

***Note: Hazardous waste premium $3.00 per hour over classified rate*

Crane with 150 ft. boom (including jib) - $1.50 extra
Crane with 200 ft. boom (including jib) - $2.50 extra
Crane with 250 ft. boom (including jib) - $5.00 extra
Crane with 300 ft. boom (including jib) - $7.00 extra
Crane with 400 ft. boom (including jib) - $10.00 extra

All classifications that indicate a percentage of the fringe benefits must be calculated at the percentage rate times the "base hourly rate".

Apprentices duly registered under the Commissioner of Labor's regulations on "Work Training Standards for Apprenticeship and Training Programs" Section 31-51-d-1 to 12, are allowed to be paid the appropriate percentage of the prevailing journeymen hourly base and the full fringe benefit rate, providing the work site ratio shall not be less than one full-time journeyperson instructing and supervising the work of each apprentice in a specific trade.

The Prevailing wage rates applicable to this project are subject to annual adjustments each July 1st for the duration of the project.

Each contractor shall pay the annual adjusted prevailing wage rate that is in effect each July 1st, as posted by the Department of Labor.

It is the contractor's responsibility to obtain the annual adjusted prevailing wage rate increases directly from the Department of Labor's website.

The annual adjustments will be posted on the Department of Labor's Web page: www.ct.gov/dol

The Department of Labor will continue to issue the initial prevailing wage rate schedule to the Contracting Agency for the project.

All subsequent annual adjustments will be posted on our Web Site for contractor access.

***As of:* Wednesday, July 28, 2010**

Project: Additions And Renovations To HC Wilcox Regional Vocational Technical School

Effective October 1, 2005 - Public Act 05-50: any person performing the work of any mechanic, laborer, or worker shall be paid prevailing wage

All Person who perform work ON SITE must be paid prevailing wage for the appropriate mechanic, laborer, or worker classification.

All certified payrolls must list the hours worked and wages paid to All Persons who perform work ON SITE regardless of their ownership i.e.: (Owners, Corporate Officers, LLC Members, Independent Contractors, et. al)
Reporting and payment of wages is required regardless of any contractual relationship alleged to exist between the contractor and such person.

~~Unlisted classifications needed for work not included within the scope of the classifications listed may be added after award only as provided in the labor standards contract clause (29 CFR 5.5 (a) (1) (ii)).

Please direct any questions which you may have pertaining to classification of work and payment of prevailing wages to the Wage and Workplace Standards Division, telephone (860)263-6790.

As of: **Wednesday, July 28, 2010**

Information Bulletin
Occupational Classifications

The Connecticut Department of Labor has the responsibility to properly determine "job classification" on prevailing wage projects covered under C.G.S. Section 31-53.

Note: This information is intended to provide a sample of some occupational classifications for guidance purposes only. It is not an all-inclusive list of each occupation's duties. This list is being provided only to highlight some areas where a contractor may be unclear regarding the proper classification.

Below are additional clarifications of specific job duties performed for certain classifications:

- ***ASBESTOS WORKERS***

Applies all insulating materials, protective coverings, coatings and finishes to all types of mechanical systems.

- ***ASBESTOS INSULATOR***

Handle, install apply, fabricate, distribute, prepare, alter, repair, dismantle, heat and frost insulation, including penetration and fire stopping work on all penetration fire stop systems.

- ***BOILERMAKERS***

Erects hydro plants, incomplete vessels, steel stacks, storage tanks for water, fuel, etc. Builds incomplete boilers, repairs heat exchanges and steam generators.

- ***BRICKLAYERS, CEMENT MASONS, CEMENT FINISHERS, MARBLE MASONS, PLASTERERS, STONE MASONS, PLASTERERS. STONE MASONS, TERRAZZO WORKERS, TILE SETTERS***

Lays building materials such as brick, structural tile and concrete cinder, glass, gypsum, terra cotta block. Cuts, tools and sets marble, sets stone, finishes concrete, applies decorative steel, aluminum and plastic tile, applies cements, sand, pigment and marble chips to floors, stairways, etc.

- ***CARPENTERS, MILLWRIGHTS. PILEDRIVERMEN. LATHERS. RESILEINT FLOOR LAYERS, DOCK BUILDERS, DIKERS, DIVER TENDERS***

Constructs, erects, installs and repairs structures and fixtures of wood, plywood and wallboard. Installs, assembles, dismantles, moves industrial machinery. Drives piling into ground to provide foundations for structures such as buildings and bridges, retaining walls for earth embankments, such as cofferdams. Fastens wooden, metal or rockboard lath to walls, ceilings and partitions of buildings, acoustical tile layer, concrete form builder. Applies firestopping materials on fire resistive joint systems only. Installation of curtain/window walls only where attached to wood or metal studs. Installation of insulated material of all types whether blown, nailed or attached in other ways to walls, ceilings and floors of buildings. Assembly and installation of modular furniture/furniture systems. Free-standing furniture is not covered. This includes free standing: student chairs, study top desks, book box desks, computer furniture, dictionary stand, atlas stand, wood shelving, two-position information access station, file cabinets, storage cabinets, tables, etc.

- ***CLEANING LABORER***

• The clean up of any construction debris and the general cleaning, including sweeping, wash down, mopping, wiping of the construction facility, washing, polishing, dusting, etc., prior to the issuance of a certificate of occupancy falls under the *Labor classification.*

- ***DELIVERY PERSONNEL***

• If delivery of supplies/building materials is to one common point and stockpiled there, prevailing wages are not required. If the delivery personnel are involved in the distribution of the material to multiple locations within the construction site then they would have to be paid prevailing wages for the type of work performed: laborer, equipment operator, electrician, ironworker, plumber, etc.
• An example of this would be where delivery of drywall is made to a building and the delivery personnel distribute the drywall from one "stockpile" location to further sub-locations on each floor. Distribution of material around a construction site is the job of a laborer/tradesman and not a delivery personnel.

- ***ELECTRICIANS***

Install, erect, maintenance, alteration or repair of any wire, cable, conduit, etc., which generates, transforms, transmits or uses electrical energy for light, heat, power or other purposes, including the Installation or maintenance of telecommunication, LAN wiring or computer equipment, and low voltage wiring. ****License required per Connecticut General Statutes: E-1,2 L-5,6 C-5,6 T-1,2 L-1,2 V-1,2,7,8,9.***

- ***ELEVATOR CONSTRUCTORS***

Install, erect, maintenance and repair of all types of elevators, escalators, dumb waiters and moving walks. ***License required by Connecticut General Statutes: R-1,2,5,6.***

- ***FORK LIFT OPERATOR***

Laborers Group 4) Mason Tenders - operates forklift solely to assist a mason to a maximum height of nine (9) feet only.

Power Equipment Operator Group 9 - operates forklift to assist any trade, and to assist a mason to a height over nine (9) feet.

- ***GLAZIERS***

Glazing wood and metal sash, doors, partitions, and 2 story aluminum storefronts. Installs glass windows, skylights, store fronts and display cases or surfaces such as building fronts, interior walls, ceilings and table tops and metal store fronts. Installation of aluminum window walls and curtain walls is the "joint" work of glaziers and ironworkers which requires either a blended rate or equal composite workforce.

- ***IRONWORKERS***

Erection, installation and placement of structural steel, precast concrete, miscellaneous iron, ornamental iron, metal curtain wall, rigging and reinforcing steel. Handling, sorting, and installation of reinforcing steel (rebar). Metal bridge rail (traffic), metal bridge handrail, and decorative security fence installation. Installation of aluminum window walls and curtain walls is the "joint" work of glaziers and ironworkers which requires either a blended rate or equal composite workforce. Insulated metal and insulated composite panels are still installed by the Ironworker.

- ***INSULATOR***

• Installing fire stopping systems/materials for "Penetration Firestop Systems": transit to cables, electrical conduits, insulated pipes, sprinkler pipe penetrations, ductwork behind radiation, electrical cable trays, fire rated pipe penetrations, natural polypropylene, HVAC ducts, plumbing bare metal, telephone and communication wires, and boiler room ceilings. Past practice using the applicable licensed trades, Plumber, Sheet Metal, Sprinkler Fitter, and Electrician, is not inconsistent with the Insulator classification and would be permitted.

- ***LABORERS***

Acetylene burners, asphalt rakers, chain saw operators, concrete and power buggy operator, concrete saw operator, fence and guard rail erector (except metal bridge rail (traffic), metal bridge handrail, and decorative security fence

installation.), hand operated concrete vibrator operator, mason tenders, pipelayers (installation of storm drainage or sewage lines on the street only), pneumatic drill operator, pneumatic gas and electric drill operator, powermen and wagon drill operator, air track operator, block paver, curb setters, blasters, concrete spreaders.

- ***PAINTERS***

Maintenance, preparation, cleaning, blasting (water and sand, etc.), painting or application of any protective coatings of every description on all bridges and appurtenances of highways, roadways, and railroads. Painting, decorating, hardwood finishing, paper hanging, sign writing, scenic art work and drywall hhg for any and all types of building and residential work.

- ***LEAD PAINT REMOVAL***

• Painter's Rate

1. Removal of lead paint from bridges.
2. Removal of lead paint as preparation of any surface to be repainted.
3. Where removal is on a Demolition project prior to reconstruction.

• Labore'sr Rate

1. Removal of lead paint from any surface NOT to be repainted.
2. Where removal is on a *TOTAL* Demolition project only.

- ***PLUMBERS AND PIPEFITTERS***

Installation, repair, replacement, alteration or maintenance of all plumbing, heating, cooling and piping. ***License required per Connecticut General Statutes: P-1,2,6,7,8,9 J-1,2,3,4 SP-1,2 S-1,2,3,4,5,6,7,8 B-1,2,3,4 D-1,2,3,4.***

- ***POWER EQUIPMENT OPERATORS***

Operates several types of power construction equipment such as compressors, pumps, hoists, derricks, cranes, shovels, tractors, scrapers or motor graders, etc. Repairs and maintains equipment. ***License required, crane operators only, per Connecticut General Statutes.***

- ***ROOFERS***

Covers roofs with composition shingles or sheets, wood shingles, slate or asphalt and gravel to waterproof roofs, including preparation of surface. (tear-off and/or removal of any type of roofing and/or clean-up of any and all areas where a roof is to be relaid)

- ***SHEETMETAL WORKERS***

Fabricate, assembles, installs and repairs sheetmetal products and equipment in such areas as ventilation, air-conditioning, warm air heating, restaurant equipment, architectural sheet metal work, sheetmetal roofing, and aluminum gutters. Fabrication, handling, assembling, erecting, altering, repairing, etc. of coated metal material panels and composite metal material panels when used on building exteriors and interiors as soffits, facia, louvers, partitions, wall panel siding, canopies, cornice, column covers, awnings, beam covers, cladding, sun shades, lighting troughs, spires, ornamental roofing, metal ceilings, mansards, copings, ornamental and ventilation hoods, vertical and horizontal siding panels, trim, etc. The sheet metal classification also applies to the vast variety of coated metal material panels and composite metal material panels that have evolved over the years as an alternative to conventional ferrous and non-ferrous metals like steel, iron, tin, copper, brass, bronze, aluminum, etc. Insulated metal and insulated composite panels are still installed by the Iron Worker. Fabrication, handling, assembling, erecting, altering, repairing, etc. of architectural metal roof, standing seam roof, composite metal roof, metal and composite bathroom/toilet partitions, aluminum gutters, metal and composite lockers and shelving, kitchen equipment, and walk-in coolers.

- ***SPRINKLER FITTERS***

Installation, alteration, maintenance and repair of fire protection sprinkler systems. ***License required per Connecticut General Statutes: F-1,2,3,4.***

- ***TILE MARBLE AND TERRAZZO FINISHERS***

Assists and tends the tile setter, marble mason and terrazzo worker in the performance of their duties.

- **TRUCK DRIVERS**

Truck Drivers are requires to be paid prevailing wage for time spent "working" directly on the site. These drivers remain covered by the prevailing wage for any time spent transporting between the actual construction location and facilities (such as fabrication, plants, mobile factories, batch plant, borrow pits, job headquarters, tool yards, etc.) dedicated exclusively, or nearly so, to performance of the contract or project, which are so located in proximity to the actual construction location that it is reasonable to include them. ***License required, drivers only, per Connecticut General Statutes.***

For example:

Truck Drivers delivering asphalt are covered under prevailing wage while on the site and directly involved in the paving operation.

- Material men and deliverymen are not covered under prevailing wage as long as they are not directly involved in the construction process. If, they unload the material, they would then be covered by prevailing wage for the classification they are performing work in: laborer, equipment operator, etc.
- Hauling material off site is not covered provided they are not dumping it at a location outlined above.
- Driving a truck on site and moving equipment or materials on site would be considered covered work, as this is part of the construction process.

➢ *Any questions regarding the proper classification should be directed to:*

Public Contract Compliance Unit
Wage and Workplace Standards Division
Connecticut Department of Labor
200 Folly Brook Blvd, Wethersfield, CT 06109
(860) 263-6543

Informational Bulletin

THE 10-HOUR OSHA CONSTRUCTION SAFETY AND HEALTH COURSE

(applicable to public building contracts entered into *on or after July 1, 2007*, where the total cost of all work to be performed is at least $100,000)

(1) This requirement was created by Public Act No. 06-175, which is codified in Section 31-53b of the Connecticut General Statutes (pertaining to the prevailing wage statutes);

(2) The course is required for public building construction contracts (projects funded in whole or in part by the state or any political subdivision of the state) entered into on or after July 1, 2007;

(3) It is required of private employees (not state or municipal employees) and apprentices who perform manual labor for a general contractor or subcontractor on a public building project where the total cost of all work to be performed is at least $100,000;

(4) The ten-hour construction course pertains to the ten-hour Outreach Course conducted in accordance with federal OSHA Training Institute standards, and, for telecommunications workers, a ten-hour training course conducted in accordance with federal OSHA standard, 29 CFR 1910.268;

(5) The internet website for the federal OSHA Training Institute is http://www.osha.gov/fso/ote/training/edcenters/fact_sheet.html;

(6) The statutory language leaves it to the contractor and its employees to determine who pays for the cost of the ten-hour Outreach Course;

(7) Within 30 days of receiving a contract award, a general contractor must furnish proof to the Labor Commissioner that all employees and apprentices performing manual labor on the project will have completed such a course;

(8) Proof of completion may be demonstrated through either: (a) the presentation of a *bona fide* student course completion card issued by the federal OSHA Training Institute; *or* (2) the presentation of documentation provided to an employee by a trainer certified by the Institute pending the actual issuance of the completion card;

(9) Any card with an issuance date more than 5 years prior to the commencement date of the construction project shall not constitute proof of compliance;

(10) Each employer shall affix a copy of the construction safety course completion card to the certified payroll submitted to the contracting agency in accordance with Conn. Gen. Stat. § 31-53(f) on which such employee's name first appears;

(11) Any employee found to be in non-compliance shall be subject to removal from the worksite if such employee does not provide satisfactory proof of course completion to the Labor Commissioner by the fifteenth day after the date the employee is determined to be in noncompliance;

(12) Any such employee who is determined to be in noncompliance may continue to work on a public building construction project for a maximum of fourteen consecutive calendar days while bringing his or her status into compliance;

(13) The Labor Commissioner may make complaint to the prosecuting authorities regarding any employer or agent of the employer, or officer or agent of the corporation who files a false certified payroll with respect to the status of an employee who is performing manual labor on a public building construction project;

(14) The statute provides the minimum standards required for the completion of a safety course by manual laborers on public construction contracts; any contractor can exceed these minimum requirements; and

(15) Regulations clarifying the statute are currently in the regulatory process, and shall be posted on the CTDOL website as soon as they are adopted in final form.

(16) Any questions regarding this statute may be directed to the Wage and Workplace Standards Division of the Connecticut Labor Department via the internet website of http://www.ctdol.state.ct.us/wgwkstnd/wgemenu.htm; or by telephone at (860)263-6790.

THE ABOVE INFORMATION IS PROVIDED EXCLUSIVELY AS AN EDUCATIONAL RESOURCE, AND IS NOT INTENDED AS A SUBSTITUTE FOR LEGAL INTERPRETATIONS WHICH MAY ULTMATELY ARISE CONCERNIG THE CONSTRUCTION OF THE STATUTE OR THE REGULATIONS.

Connecticut Department of Labor
Wage and Workplace Standards Division
FOOTNOTES

Please Note: If the "Benefits" listed on the schedule for the following occupations includes a letter(s) (+ a or + a+b for instance), refer to the information below.

Benefits to be paid at the appropriate prevailing wage rate for the listed occupation.

If the "Benefits" section for the occupation lists only a dollar amount, disregard the information below.

Bricklayers, Cement Masons, Cement Finishers, Concrete Finishers (including caulking), Stone Masons
(Building Construction) and
(Residential- Hartford, Middlesex, New Haven, New London and Tolland Counties)

a. Paid Holiday: Employees shall receive 4 hours for Christmas Eve holiday provided the employee works the regularly scheduled day before and after the holiday. Employers may schedule work on Christmas Eve and employees shall receive pay for actual hours worked in addition to holiday pay.

Bricklayer (Residential- Fairfield County)

a. Paid Holiday: If an employee works on Christmas Eve until noon he shall be paid for 8 hours.

Electricians
Fairfield County: West of the Five Mile River in Norwalk

a. $2.00 per hour not to exceed $14.00 per day.

Elevator Constructors: Mechanics

a. Paid Holidays: New Year's Day, Memorial Day, Independence Day, Labor Day, Veterans' Day, Thanksgiving Day, Christmas Day, plus the Friday after Thanksgiving.

b. Vacation: Employer contributes 8% of basic hourly rate for 5 years or more of service or 6% of basic hourly rate for 6 months to 5 years of service as vacation pay credit.

Glaziers

a. Paid Holidays: Labor Day and Christmas Day.

Power Equipment Operators
(Heavy and Highway Construction & Building Construction)

a. Paid Holidays: New Year's Day, Good Friday, Memorial day, Independence Day, Labor Day, Thanksgiving Day and Christmas Day, provided the employee works 3 days during the week in which the holiday falls, if scheduled, and if scheduled, the working day before and the working day after the holiday. Holidays falling on Saturday may be observed on Saturday, or if the employer so elects, on the preceding Friday.

Ironworkers

a. Paid Holiday: Labor Day provided employee has been on the payroll for the 5 consecutive work days prior to Labor Day.

Laborers (Tunnel Construction)

a. Paid Holidays: New Year's Day, Memorial Day, Independence Day, Labor Day, Thanksgiving Day and Christmas Day. No employee shall be eligible for holiday pay when he fails, without cause, to work the regular work day preceding the holiday or the regular work day following the holiday.

Roofers

a. Paid Holidays: July 4th, Labor Day, and Christmas Day provided the employee is employed 15 days prior to the holiday.

Sprinkler Fitters

a. Paid Holidays: Memorial Day, July 4th, Labor Day, Thanksgiving Day and Christmas Day, provided the employee has been in the employment of a contractor 20 working days prior to any such paid holiday.

Truck Drivers
(Heavy and Highway Construction & Building Construction)

a. Paid Holidays: New Year's Day, Memorial Day, Independence Day, Labor Day, Thanksgiving Day, Christmas day, and Good Friday, provided the employee has at least 31 calendar days of service and works the last scheduled day before and the first scheduled day after the holiday, unless excused.

Statute 31-55a

Last Updated: April 22, 2010

- Special Notice -

To All State and Political Subdivisions,Their Agents, and Contractors

Connecticut General Statute 31-55a - Annual adjustments to wage rates by contractors doing state work.

Each contractor that is awarded a contract on or after October 1, 2002, for (1) the construction of a state highway or bridge that falls under the provisions of section 31-54 of the general statutes, or (2) the construction, remodeling, refinishing, refurbishing, rehabilitation, alteration or repair of any public works project that falls under the provisions of section 31-53 of the general statutes shall contact the Labor Commissioner on or before July first of each year, for the duration of such contract, to ascertain the prevailing rate of wages on an hourly basis and the amount of payment or contributions paid or payable on behalf of each mechanic, laborer or worker employed upon the work contracted to be done, and shall make any necessary adjustments to such prevailing rate of wages and such payment or contributions paid or payable on behalf of each such employee, effective each July first.

- The prevailing wage rates applicable to any contract or subcontract awarded on or after October 1, 2002 are subject to annual adjustments each July 1st for the duration of any project which was originally advertised for bids on or after October 1, 2002.
- Each contractor affected by the above requirement shall pay the annual adjusted prevailing wage rate that is in effect each July 1st, as posted by the Department of Labor.
- It is the ***contractor's*** responsibility to obtain the annual adjusted prevailing wage rate increases directly from the Department of Labor's Web Site. The annual adjustments will be posted on the Department of Labor Web page: www.ctdol.state.ct.us. For those without internet access, please contact the division listed below.
- The Department of Labor will continue to issue the initial prevailing wage rate schedule to the Contracting Agency for the project. All subsequent annual adjustments will be posted on our Web Site for contractor access.

Any questions should be directed to the Contract Compliance Unit, Wage and Workplace Standards Division, Connecticut Department of Labor, 200 Folly Brook Blvd., Wethersfield, CT 06109 at (860)263-6790.

← -- Workplace Laws

Published by the Connecticut Department of Labor, Project Management Office

[New] In accordance with Section 31-53b(a) of the C.G.S. each contractor shall provide a copy of the OSHA 10 Hour Construction Safety and Health Card for each employee, to be attached to the first certified payroll on the project.

In accordance with Connecticut General Statutes, 31-53
Certified Payrolls with a statement of compliance
shall be submitted monthly to the contracting agency.

PAYROLL CERTIFICATION FOR PUBLIC WORKS PROJECTS

WEEKLY PAYROLL

Connecticut Department of Labor
Wage and Workplace Standards Division
200 Folly Brook Blvd.
Wethersfield, CT 06109

CONTRACTOR NAME AND ADDRESS:

SUBCONTRACTOR NAME & ADDRESS

WORKER'S COMPENSATION INSURANCE CARRIER

POLICY #

EFFECTIVE DATE:
EXPIRATION DATE:

PAYROLL NUMBER	Week-Ending Date	PROJECT NAME & ADDRESS

PERSON/WORKER, ADDRESS and SECTION	APPR RATE %	MALE/ FEMALE AND RACE*	WORK CLASSIFICATION / Trade License Type & Number - OSHA 10 Certification Number	DAY AND DATE S	M	T	W	TH	F	S	Total ST Hours / Total O/T Hours	BASE HOURLY RATE / TOTAL FRINGE BENEFIT PLAN CASH	TYPE OF FRINGE BENEFITS Per Hour 1 through 6 (see back)	GROSS PAY FOR ALL WORK PERFORMED THIS WEEK	TOTAL DEDUCTIONS FICA	FEDERAL WITH-HOLDING	STATE WITH-HOLDING	LIST OTHER	GROSS PAY FOR THIS PREVAILING RATE JOB	CHECK # AND NET PAY
				HOURS WORKED EACH DAY							S-TIME	$ Base Rate	1. $ 2. $ 3. $							
											O-TIME	$ Cash Fringe	4. $ 5. $ 6. $							
											S-TIME	$ Base Rate	1. $ 2. $ 3. $							
											O-TIME	$ Cash Fringe	4. $ 5. $ 6. $							
											S-TIME	$ Base Rate	1. $ 2. $ 3. $							
											O-TIME	$ Cash Fringe	4. $ 5. $ 6. $							
											S-TIME	$ Base Rate	1. $ 2. $ 3. $							
											O-TIME	$ Cash Fringe	4. $ 5. $ 6. $							

7/13/2009
WWS-CP1

*IF REQUIRED

*SEE REVERSE SIDE

PAGE NUMBER _____OF

OSHA 10 ~ATTACH CARD TO 1ST CERTIFIED PAYROLL

***FRINGE BENEFITS EXPLANATION (P):**

Bona fide benefits paid to approved plans, funds or programs, except those required by Federal or State Law (unemployment tax, worker's compensation, income taxes, etc.).

Please specify the type of benefits provided:

1) Medical or hospital care _____ 4) Disability_____

2) Pension or retirement _____ 5) Vacation, holiday_____

3) Life Insurance _____ 6) Other (please specify) _____

CERTIFIED STATEMENT OF COMPLIANCE

For the week ending date of _____,

I, _____of _____, (hereafter known as

Employer) in my capacity as _____ (title) do hereby certify and state:

Section A:

1. All persons employed on said project have been paid the full weekly wages earned by them during the week in accordance with Connecticut General Statutes, section 31-53, as amended. Further, I hereby certify and state the following:

a) The records submitted are true and accurate;

b) The rate of wages paid to each mechanic, laborer or workman and the amount of payment or contributions paid or payable on behalf of each such employee to any employee welfare fund, as defined in Connecticut General Statutes, section 31-53 (h), are not less than the prevailing rate of wages and the amount of payment or contributions paid or payable on behalf of each such employee to any employee welfare fund, as determined by the Labor Commissioner pursuant to subsection Connecticut General Statutes, section 31-53 (d), and said wages and benefits are not less than those which may also be required by contract;

c) The Employer has complied with all of the provisions in Connecticut General Statutes, section 31-53 (and Section 31-54 if applicable for state highway construction);

d) Each such employee of the Employer is covered by a worker's compensation insurance policy for the duration of his employment which proof of coverage has been provided to the contracting agency;

e) The Employer does not receive kickbacks, which means any money, fee, commission, credit, gift, gratuity, thing of value, or compensation of any kind which is provided directly or indirectly, to any prime contractor, prime contractor employee, subcontractor, or subcontractor employee for the purpose of improperly obtaining or rewarding favorable treatment in connection with a prime contract or in connection with a prime contractor in connection with a subcontractor relating to a prime contractor; and

f) The Employer is aware that filing a certified payroll which he knows to be false is a class D felony for which the employer may be fined up to five thousand dollars, imprisoned for up to five years or both.

2. OSHA~The employer shall affix a copy of the construction safety course, program or training completion document to the certified payroll required to be submitted to the contracting agency for this project on which such employee's name first appears.

_____ _____ _____

(Signature) (Title) Submitted on (Date)

Section B: Applies to CONNDOT Projects ONLY

That pursuant to CONNDOT contract requirements for reporting purposes only, all employees listed under Section B who performed work on this project are not covered under the prevailing wage requirements defined in Connecticut General Statutes Section 31-53.

_____ _____ _____

(Signature) (Title) Submitted on (Date)

Note: CTDOL will assume all hours worked were performed under Section A unless clearly delineated as Section B WWS-CP1 as such. Should an employee perform work under both Section A and Section B, the hours worked and wages paid must be segregated for reporting purposes.

*****THIS IS A PUBLIC DOCUMENT*****

*****DO NOT INCLUDE SOCIAL SECURITY NUMBERS*****

Weekly Payroll Certification For Public Works Projects (Continued)

PAYROLL CERTIFICATION FOR PUBLIC WORKS PROJECTS

Week-Ending Date:
Contractor or Subcontractor Business Name:

WEEKLY PAYROLL

PERSON/WORKER, ADDRESS and SECTION	APPR RATE %	MALE/ FEMALE AND RACE*	WORK CLASSIFICATION Trade License Type & Number - OSHA 10 Certification Number	DAY AND DATE S	M	T	W	TH	F	S	Total ST Hours Total O/T Hours	BASE HOURLY RATE TOTAL FRINGE BENEFIT PLAN CASH	TYPE OF FRINGE BENEFITS Per Hour 1 through 6 (see back)	GROSS PAY FOR ALL WORK PERFORMED THIS WEEK	TOTAL DEDUCTIONS FICA	FEDERAL WITH-HOLDING	STATE WITH-HOLDING	LIST OTHER	GROSS PAY FOR THIS PREVAILING RATE JOB	CHECK # AND NET PAY
				HOURS WORKED EACH DAY																
											S-TIME	$ Base Rate	1. $ 2. $ 3. $							
											O-TIME	$ Cash Fringe	4. $ 5. $ 6. $							
											S-TIME	$ Base Rate	1. $ 2. $ 3. $							
											O-TIME	$ Cash Fringe	4. $ 5. $ 6. $							
											S-TIME	$ Base Rate	1. $ 2. $ 3. $							
											O-TIME	$ Cash Fringe	4. $ 5. $ 6. $							
											S-TIME	$ Base Rate	1. $ 2. $ 3. $							
											S-TIME	$ Cash Fringe	4. $ 5. $ 6. $							
											S-TIME	$ Base Rate	1. $ 2. $ 3. $							
											S-TIME	$ Cash Fringe	4. $ 5. $ 6. $							

*IF REQUIRED

NOTICE: THIS PAGE MUST BE ACCOMPANIED BY A COVER PAGE (FORM # WWS-CP1)

ADDITIONS AND RENOVATIONS
HC WILCOX REGIONAL VOCATIONAL TECHNICAL SCHOOL
MERIDEN, CONNECTICUT
PROJECT: BI- RT - 843

BID OPENING	**July 7, 2010**	**July 7, 2010**
ADDENDUM NUMBER 4	**DATE OF ADDENDUM**	**JULY 23, 2010**

The following clarifications are applicable to drawings and specifications for the project referenced above.

Item 1

Section 00 11 16, Invitation to Bid, Plans & Specs Ready Date is Wednesday, July 28, 2010.

Item 2

Section 00 11 16, Invitation to Bid, the Pre-bid Conference Date is scheduled for Tuesday, August 10, 2010 at 10:00 a.m. Prospective Bidders must sign in, at or before 10:00 a.m. and must sign out at the conclusion of the Pre-bid Conference. Prospective bidders will be denied admittance to the Pre-bid Conference after 10:00 a.m.

Item 3

Section 00 11 16, Invitation to Bid, the Bid Opening Date is scheduled for Wednesday, September 15, 2010.

Item 4

In the Project Manual, Table of Contents, Division 2, ADD the following above 020900 Lead Paint Activity:

020226	Excavation Of PCB Remediation Waste Soils	9

Item 5

In the Project Manual, Table of Contents, Division 2, ADD the following below Unit Price Schedule:

028215	Abatement Of PCB Contaminated Building Materials	20

Item 6

In Section 011000, Paragraph 1.3, D.1, CHANGE the last sentence to read: "Allow two weeks."

Item 7

In Section 012000, Paragraph 1.3, ADD the following:

C. Quantity Allowances:

1. The Contractor's costs for unloading and handling, storage, insurance, overhead and profit and other expense related to the Allowance item shall be included in the Lump Sum Bid Amount and not in the Allowance unless stated otherwise in the Allowance Schedule of this section.

2. Architect/Engineer Responsibilities:
   a. Review Change Order.

3. Construction Administrator Responsibilities:
   a. Assist Architect/Engineer, Project Manager and Agency Representatives with verifying quantities.
   b. Review/Prepare Change Order.

4. Contractor Responsibilities:
   a. Arrange for and process shop drawings, product data, and samples. Arrange for delivery.
   b. If the actual quantities of an Allowance item are more or less than the specified amount, the Contract Sum will be adjusted by Change Order utilizing the quantity allocation to establish an add/deduct unit price. This unit price will be determined by dividing the allowance value by the specified number of units. The unit price established will be used for deduct changes. The unit price plus 10% will be used for add changes. The unit price must appear as a separate line item in the schedule of values.

5. Allowance Schedule: These allowances are to be used for additional work NOT identified in the Contract Documents.
   a. Allowance No. 1: Include a quantity allowance of 14,000 SF of Moisture Vapor Emission Reduction Control System For Resinous Flooring Locations.
   b. Allowance No. 2: Include a quantity allowance of 14,000 SF of Moisture Vapor Emission Reduction Control System For Non-Resinous Flooring Locations.

Item 8

In Section 012000, Paragraph 1.5, G, ADD the following:

2. Unit Price – See Division 02 "Abatement of PCB Contaminated Building Materials" for unit prices associated with PCB's.

Item 9

In Section 015000, Paragraph 3.3, K

DELETE Paragraph 3.3, K.1.

SUBSTITUTE

1. Rodent and Pest Control: Before deep foundation work or structural demolition has begun, retain a local exterminator or pest control company to recommend practices to minimize attraction and harboring of rodents, roaches, and other pests. Employ this service to perform extermination and control procedures at regular intervals so the project will be free of pests and their residues.

Item 10

In Section 017830, Paragraph 1.3, F, ADD the following:

29. Section 072600, Surface Applied Vapor Reduction Systems: Repair/replace flooring system that fails due to vapor transmission for 5-years.

Item 11

ADD Section 020226, Excavation of PCB Remediation Waste Soils

Item 12

ADD Section 028215, Abatement of PCB Contaminated Building Materials.

Item 13

DELETE Section 072600 "Surface Applied Vapor Reduction System".

SUBSTITUTE Section 072600 "Surface Applied Vapor Reduction System" dated 07/23/10.

Item 14

In Section 099419, Paragraph 2.3

DELETE: Paragraph 2.3, A.1

SUBSTITUTE:

1. Available Products: Subject to compliance with requirements, provide one of the following:
   a. Zolatone, Polomyx Airless; Master Coating Technologies.
   b. Scuffmaster; Master Coating Technologies.
   c. Roxatone Multicolored Coatings; Sky Coatings Inc;.

Item 15

In Section 210548, Paragraph 1.4

DELETE Paragraph 1.4, F

SUBSTITUTE

F. Seismic-Restraint Loading:

   1. Seismic design Category: B
   2. Site Class as Defined in the IBC: D.
   3. Building Category as Defined in the IBC: III.
   4. Seismic Use Group: II

      a. Component Importance Factor: Refer to table 9.6.3.2, ASCE 7.
      b. Component Response Modification Factor: Refer to table 9.6.3.2, ASCE 7.
      c. Component Amplification Factor: Refer to table 9.6.3.2, ASCE 7.

   5. Design Spectral Response Acceleration at Short Periods (0.2 Second): 28%
   6. Design Spectral Response Acceleration at 1-Second Period: 8.4%

Item 16

In Section 220548, Paragraph 1.4

DELETE Paragraph 1.4, B

SUBSTITUTE

B. Seismic-Restraint Loading:

   1. Seismic design Category: B
   2. Site Class as Defined in the IBC: D.
   3. Building Category as Defined in the IBC: III.
   4. Seismic Use Group: II

      a. Component Importance Factor: Refer to table 9.6.3.2, ASCE 7.
      b. Component Response Modification Factor: Refer to table 9.6.3.2, ASCE 7.

c. Component Amplification Factor: Refer to table 9.6.3.2, ASCE 7.

5. Design Spectral Response Acceleration at Short Periods (0.2 Second): 28%
6. Design Spectral Response Acceleration at 1-Second Period: 8.4%

Item 17

In Section 230548, Paragraph 1.4

DELETE Paragraph 1.4, E

SUBSTITUTE

E. Seismic-Restraint Loading:

1. Seismic design Category: B
2. Site Class as Defined in the IBC: D.
3. Building Category as Defined in the IBC: III.
4. Seismic Use Group: II

a. Component Importance Factor: Refer to table 9.6.3.2, ASCE 7.
b. Component Response Modification Factor: Refer to table 9.6.3.2, ASCE 7.
c. Component Amplification Factor: Refer to table 9.6.3.2, ASCE 7.

5. Design Spectral Response Acceleration at Short Periods (0.2 Second): 28%
6. Design Spectral Response Acceleration at 1-Second Period: 8.4%

Item 18

DELETE Section 230900 "Instrumentation and Controls for HVAC".

SUBSTITUTE Section 230900 "Instrumentation and Controls for HVAC" dated 07/23/10.

Item 19

In Section 260548, Paragraph 1.4

DELETE Paragraph 1.4, A

SUBSTITUTE

A. Seismic-Restraint Loading:

1. Seismic design Category: B
2. Site Class as Defined in the IBC: D.
3. Building Category as Defined in the IBC: III.

4. Seismic Use Group: II

   a. Component Importance Factor: Refer to table 9.6.3.2, ASCE 7.
   b. Component Response Modification Factor: Refer to table 9.6.3.2, ASCE 7.
   c. Component Amplification Factor: Refer to table 9.6.3.2, ASCE 7.

5. Design Spectral Response Acceleration at Short Periods (0.2 Second): 28%
6. Design Spectral Response Acceleration at 1-Second Period: 8.4%

Item 20

On the drawing set Cover sheet, Volume 1 of 2, ADD the following to the list of drawings after "LBP1.01. Lead Based Paint":

SOIL1.01	PCB Soil Remediation Areas
PCB1.01	First Floor Demolition Plan – Area A & C
PCB1.02	First Floor Demolition Plan – Area A
PCB1.03	First Floor Demolition Plan – Area B & C
PCB1.04	First Floor Demolition Plan – Area B & C
PCB1.05	First Floor Demolition Plan – Area C
PCB1.06	Second Floor Demolition Plan – Area A
PCB1.07	Second Floor Demolition Plan – Area A
PCB1.08	Second Floor Demolition Plan – Area C
PCB1.09	First Floor Demolition Plan Annex Building – Area D

Item 21

ADD Drawing SOIL1.01.

Item 22

ADD Drawing PCB1.01.

Item 23

ADD Drawing PCB1.02.

Item 24

ADD Drawing PCB1.03.

Item 25

ADD Drawing PCB1.04.

Item 26

ADD Drawing PCB1.05.

Item 27

ADD Drawing PCB1.06.

Item 28

ADD Drawing PCB1.07.

Item 29

ADD Drawing PCB1.08.

Item 30

ADD Drawing PCB1.09.

Item 31

CHANGE drawing D1.03, per SKA-1

Item 32

DELETE Drawing D1.04.

SUBSTITUTE Drawing D1.04, Revision date 7/23/10.

Item 33

CHANGE Drawing D1.05 per SKA-2.

Item 34

In Drawing A1.02, ADD Elevation key per SKA-3.

Item 35

In Drawing A1.02, ADD Sink and revise Elevation key per SKA-4.

Item 36

In Drawing A1.03, ADD Elevation key per SKA-5.

Item 37

DELETE Drawing A1.04.

SUBSTITUTE Drawing A1.04, Revision date 7/23/10.

Item 38

DELETE Drawing A1.05.

SUBSTITUTE Drawing A1.05, Revision date 7/23/10.

Item 39

In Drawing A1.07, ADD Elevation Keys per SKA-6.

Item 40

In Drawing A1.07, ADD Elevation Keys per SKA-7.

Item 41

DELETE Drawing A3.05.

SUBSTITUTE Drawing A3.05, Revision date 7/23/10.

Item 42

In Drawing A4.10A, CHANGE Detail 4 per SKA-8.

Item 43

In Drawing A5.01, ADD window type per SKA-9.

Item 44

In Drawing A8.07, ADD interior elevation detail per SKA-10.

Item 45

In Drawing A10.02, CHANGE schedule per SKA-11.

Item 46

In Drawing A12.08, ADD equipment per SKA-12.

Item 47

In Drawing A12.09, ADD equipment per SKA-13.

Item 48

In Drawing P1.02, ADD sink per SKP-072310-1.

Item 49

In Drawing P1.03, ADD piping per SKP-072310-2.

Item 50

In Drawing P1.09, ADD plumbing per SKP-072310-3.

Item 51

In Drawing E1.02, CHANGE receptacle locations per SKE-072310-1.

Item 52

In Drawing E1.09, ADD receptacles per SKE-072310-2.

Item 53

In Drawing E6.05, CHANGE Panel Schedule per SKE-072310-3.

Item 54

In Drawing FP1.05, ADD Piping per SKFP-072310-1

Item 55

In Drawing FP3.00, CHANGE Detail per SKFP-072310-2

Item 56

In Drawing FP2.00, CHANGE Riser Diagram per SKFP-072310-3

All questions must be in writing (not phone or e-mail) and must be forwarded to the consulting Architect/Engineer (Randall Luther, Tai Soo Kim Partners, LLC., Fax: 860-249-0695) with copies sent to the DPW Project Manager (Barbara Cosgrove, Fax: 860-713-7270).

End of Addendum Number Four

Gail Blythe

Gail Blythe, Associate Fiscal Administrative Officer
Department of Public Works

PART 1 GENERAL

1.1 APPLICABLE PUBLICATIONS

The publications listed below form a part of this specification to the extent referenced. The publications are referred to in the text by the basic designation only.

UNITED STATES ARMY CORPS OF ENGINEERS (COE)

EM-385-1-1 Safety and Health Requirements Manual

ENVIRONMENTAL PROTECTION AGENCY (EPA)

EPA SW-846 Test Methods for Evaluating Solid Waste, Current Edition.

CODE OF FEDERAL REGULATIONS (CFR)

40 CFR Part 761 Polychlorinated Biphenyls Manufacturing, Processing, Distribution in Commerce, and Use Prohibitions

REGULATION OF CONNECTICUT STATE AGENCIES

Sections 22a-133k-1 through 22a-133k-3, inclusive, Remediation Standard

1.2 DESCRIPTION

The project SITE encompasses sections of the H.C. Wilcox Technical High School (Wilcox Tech) located at 298 Oregon Road in Meriden, Connecticut. The SITE, which is part of the Connecticut Technical High School System, is owned by the Connecticut Department of Education (CT DOE). The Connecticut Department of Public Works (DPW) is conducting site remediation tasks at this facility prior to the performance of various site renovation and demolition activities.

Remedial action at the SITE includes excavation and off-site disposal of soil adjacent to the buildings with total PCB concentrations $\geq$1 mg/kg contaminated by PCB containing caulk and/or glazing classified as a PCB Bulk Product Waste.

This section includes requirements for excavating and handling PCB contaminated soil from the proposed surface soil remediation areas as shown on the Contract Drawings and described in the PCB Site Remedial Plan.

1.3 DEFINITIONS

1.3.1 Contaminant Zones

Contaminant zones are those areas of active excavation and the waste storage area.

1.3.2 Excavation

The removal of soil, rock, or hard material to obtain a specified depth or elevation.

1.3.3 PCB Bulk Product Wastes

PCB bulk product waste means waste derived from manufactured products containing PCBs in a non-liquid state, at any concentration where the concentration at the time of designation for disposal was ≥50 ppm PCBs.

1.3.4 PCB Remediation Waste with ≥50 ppm PCBs

PCB remediation waste means waste containing PCBs as a result of a spill, release, or other unauthorized disposal, at concentrations ≥ 50 ppm PCBs, regardless of the concentration of the original spill.

1.3.5 PCB Remediation Waste with <50 ppm PCBs

PCB remediation waste means waste containing PCBs as a result of a spill, release, or other unauthorized disposal which are currently at any concentration if the PCBs are spilled or released from a source not authorized for use under this part.

1.3.6 PCB Site Remedial Plan

"Self-Implementing Cleanup Plan, H.C. Wilcox Technical High School", Prepared by TRC, June 2010.

1.3.7 PCB Engineer

To be retained by the Owner, responsible for overseeing excavation work and for performing and evaluating verification sample data.

1.3.8 Owner

The Owner is the Connecticut Department of Public Works and shall be responsible for the Contract and the performance of all the work.

1.3.9 Remedial Action Level

Concentration to which PCB contaminated soil must be removed to verify completion of excavation work.

1.3.10 Soil

The loose surface material of the earth's crust resulting from the chemical and mechanical weathering of rock and organic material.

1.3.11 Suitable Waste Storage Container

A container in which soil is placed for storage prior to transport offsite for disposal that is water tight, lined, and equipped with a cover that prevents the infiltration of rainwater into the container.

1.3.12 Excavated Soil Stockpile

An area where excavated soil is placed following excavation and prior to loading into a waste storage container. At no time will the Contractor create and excavated soil stockpile. All excavated soil is to be placed directly into a suitable waste storage container.

1.3.13 Verification Sampling

Sampling performed to determine the completion of excavation activities as per Subpart O of 40 CFR Part 761.

1.3.14 Waste Storage Area

The secured location in which the Contractor shall store soil prior to offsite transport for disposal. The Contractor shall consult with the Owner and the PCB Engineer to identify the location of Waste Storage Areas prior to generating any wastes. This area shall be secured and signed by the Contractor.

1.4 SUBMITTALS

Prior to performing the excavation work, the Contractor shall submit:

1.4.1 Key Personnel

The Contractor shall submit a list of the key personnel of the Contractor and subcontractors (including addresses and telephone numbers) for use in the event of an emergency. As changes occur and additional information becomes available, the

Contractor shall correct and change the information contained in previous lists. The Contractor's Representative shall be identified on this list.

1.4.2 Waste Characterization Analytical Data, Waste Profiles, and Disposal Approval

The Contractor shall submit all waste characterization analytical data and waste profiles prior to submittal to any proposed waste disposal facility. The Contractor shall submit all Disposal Approvals a minimum of seven (7) days prior to performing excavation work.

1.4.3 Equipment Decontamination Plan

The Contractor shall submit a decontamination plan for all materials and equipment that shall contact PCB Remediation Wastes and that are to be removed from the site following the completion of work. The decontamination plan shall conform to the requirements of §761.79(c). The Contractor shall submit proof of decontamination to the PCB Engineer as required.

1.5 REGULATORY REQUIREMENTS

All soil is to be handled and stored in accordance with the provision of 40 CFR Part 761 Subpart D. The Contractor shall be responsible for all costs associated with investigation and remediation of any releases due to their failure to handle excavated soil in accordance with the regulatory requirements.

1.6 DELIVERY AND STORAGE

The Contractor shall deliver and store materials in a manner to prevent contamination, segregation, freezing, and other damage.

1.7 MEASUREMENT AND PAYMENT

The Contractor's cost proposal shall be based on the following criteria:

a. Measurement for payment shall be based on mass computation using the tonnage recorded by the waste disposal facility on the completed and signed manifests for each

b. No extra payment shall be made for removal of standing water, fencing, decontamination, run-on/run-off controls, dust control, site preparation, site restoration or waste disposal areas. The cost for these items shall be included in the base bid.

1.8 PROTECTION

1.8.1 Utility Location

The Contractor shall contact Connecticut's Call Before You Dig for underground utility markouts in accordance with applicable regulations, and provide a confirmation number for DPW's records. The Contractor shall verify the location of all utilities shown on the Contract Drawings or identified during utility mark-outs.

Movement of construction machinery and equipment over pipes and utilities during construction shall be at the Contractor's risk. The Contractor shall perform all work adjacent to utilities as indicated in accordance with procedures outlined by utility company. For work immediately adjacent to or for excavations exposing a utility or other buried obstruction, use hand or light equipment excavation. Start hand or light equipment excavation on each side of the indicated obstruction and continue until the obstruction is uncovered or until clearance for the new grade is assured. Support uncovered lines or other existing work affected by the contract excavation as required. The Contractor shall report damage to utility lines or subsurface construction immediately to the PCB Engineer. The Contractor shall be responsible for the repair of all damaged utilities that were previously shown on Contract Drawings or identified during utility mark-outs.

1.8.2 Overhead Utilities

If excavation or backfilling equipment (excavator arms, lifts, dump truck beds, etc.) at the site can potentially come within a 15 foot radius of the overhead electrical lines, a dedicated spotter must be used for each such piece of equipment. The spotter must be in continuous radio and line of sight communication with the equipment operator and be capable of immediately stopping the equipment operation if any portion of the equipment is in danger of penetrating the 15 foot radius overhead electrical line safety zone. The spotter shall be an experienced and qualified equipment operator.

1.8.3 Structures and Surfaces

The Contractor shall protect adjacent structures and surfaces from traffic, erosion settlement, or any other damage. The Contractor shall repair and reestablish damaged or eroded grades and slopes and restore surface construction prior to acceptance.

PART 2 PRODUCTS - NONE

PART 3 EXECUTION

3.1 SITE PREPARATION

Prior to performing soil excavations, the Contractor shall secure the excavation area with temporary fencing. The Contractor may move temporary fencing sections to allow for work progress while actively working in an excavation area. However, if no work is actively being performed in an excavation area the temporary fencing will be reinstalled.

3.1.1 Excavation Layout

The Contractor shall mark the limits of proposed initial excavations of contaminated soils prior to performing any excavations. The limits of the excavations shall correspond to those shown on the Contract Drawings.

3.1.2 Sedimentation, Erosion and Run-On Controls

The Contractor shall install in accordance with Section 02112, "Erosion and Sediment Control" and the Contract Drawings.

3.1.3 Waste Storage Areas

If the Contractor chooses to store soil onsite prior to transport offsite for disposal, the Contractor shall construct a secured Waste Storage Area at a location agreed to by the Contractor and the PCB Engineer within contract limit lines. The contract limit lines are to be secured as described elsewhere in these specifications and entry shall be limited to Contractor Personnel only. The Waste Storage Area shall enclose all Suitable Waste Storage Containers actively in use with temporary fencing. The fence shall be marked with a Large M_L mark as specified in 40 CFR Part 761 Subpart C.

3.1.4 Waste Storage

The Contractor shall not store waste onsite in a Suitable Waste Container for a period of more than 30 days. The start of the period of waste storage for each container will start on the day in which wastes are first loaded into a container and will terminate when the container is transported offsite.

The Contractor shall store waste onsite in Suitable Waste Containers. No stockpiling shall be allowed and the Contractor shall be responsible for all costs associated with investigation and remediation of any areas contaminated due to the failure of the Contractor to comply with waste storage requirements.

3.1.5 Decontamination

The Contractor shall decontaminate all moveable equipment that contact PCB Remediation Wastes in accordance with the procedures specified in §761.79(c). The Contractor shall not remove any equipment from the Contaminant Zone until it has been properly decontaminated.

Specifically, the Contractor shall employ double wash/rinse procedures as specified in 40 CFR Part 761 Subpart S or swab non-porous surfaces that have contacted PCB wastes with a solvent as specified in §761.79(c)(2)(i). The Contractor shall segregate all liquid waste streams and be responsible for characterizing these wastes for disposal purposes. Solid wastes generated during decontamination shall be stored for disposal with the other PCB wastes generated during remediation activities.

The PCB Engineer shall be responsible for ensuring that decontamination procedures are followed and that wastes are appropriately characterized and disposed of properly.

3.2 SURFACE PREPARATION

3.2.1 Clearing and Grubbing

Clearing is not required for any of the excavation areas as this will be performed by others. Limited grubbing is required in the excavation to be performed on the northwest side of the A-Wing as there are some roots in place within the excavation area.

The soil removed from any root structure that has been grubbed from an excavation area must remain in the excavation or be placed directly into a Suitable Waste Container. Unless suitably decontaminated and tested as clean, all roots grubbed from an area must be considered to be PCB Remediation Wastes.

3.3 EXCAVATION AND HANDLING OF CONTAMINATED SOILS

3.3.1 Contaminant Zone Operations

Construction equipment such as excavators, front end loaders, dozers and hauling vehicles, used within a Contaminant Zone that have contacted PCB Remediation Wastes shall not be permitted to move outside of the area until they have been properly decontaminated.

All soil within the excavations shall be assumed to be PCB Remediation Wastes <50 ppm unless the Contractor is otherwise instructed by the PCB Engineer. All waste handling and storage procedures, equipment decontamination procedures, and other Contaminant Zone Operations shall conform to the requirements of 40 CFR Part 761 Subpart D.

3.3.2 Dust Control

The Contractor shall utilize an adjacent fire hydrant and appropriate hose for dust control. Water shall be applied to keep fugitive dust under control as needed and as directed by the PCB Engineer. Water will be provided by the DPW from an approved fire hydrant or other suitable source at no extra charge to the Contractor.

3.3.3 Excavation

Excavation shall be shallow and performed in lift intervals no greater than one foot unless otherwise approved by the PCB Engineer. Excavation areas shall be clearly marked with stakes and labels.

Excavation equipment shall be smooth edge blade without ripping teeth. Excavation shall be carried out in such a manner so as to minimize the mixing of soils to underlying soils. No ripping, plowing, harrowing or mixing of soils shall be permitted. Only excavation equipment that provides precise depth control will be permitted. No crane mounted clamshell or dragline excavators will be allowed.

Excavation shall be carried out so as to remove contaminated soils from the edge farthest away from the edge where hauling vehicles will approach the Contaminant Zone. Contaminated soils shall not be moved over areas excavated and tested as below action levels and ready for backfilling, unless hauling vehicles move across the clean area to the edge of the Contaminant Zone. Excavation equipment shall not overfill their buckets so as to allow spillage of soil across other contaminated or clean areas. The loose or excess soil shall be removed from the bucket within the active excavation area prior to moving the soil to the hauling vehicles. The Contractor shall be solely responsible for the cost of excavating, handling, storage, testing and disposal of soils that were previously clean and have tested as contaminated due to deficient Contractor operation practices and methods.

3.3.4 Personal Protective Equipment

The Contractor shall assume that all personnel working within a contaminant zone shall be required to be equipped with Personal Protective Equipment (PPE). The Contractor's health and safety officer will be responsible for determining the appropriate level of personal protection. That determination must be evaluated by a certified industrial hygienist and shall be based on actual laboratory data and monitoring from site operations. All personnel shall be required to go through an approved decontamination procedure. All personal protective garments shall be containerized and not reused after removal. The personal protective garments shall be disposed of as contaminated waste in an approved manner.

3.3.5 Remedial Action Levels

The remedial action level for PCB contaminated soil shall be <1.0 mg/kg as specified in the Regulations of Connecticut State Agencies Sections 22a-133k-1 through 22a-133k-3, inclusive, and the High Occupancy Standard without further restrictions in §761.61(a)(4) of 40 CFR Part 761.

3.8 EXCAVATION COMPLETION

Each excavation shall be considered complete after sufficient verification samples have been collected and analyzed and determined to meet remedial action levels. Verification samples shall be collected and analytical data reviewed by the PCB Engineer.

Following the completion of an excavation, the Contractor shall decontaminate their equipment as required and remove from the area. The Contractor may remove temporary security fencing if the excavation is deemed by the PCB Engineer not to be a site hazard.

END OF SECTION

PART 1 GENERAL

1.1 APPLICABLE PUBLICATIONS

Drawings and general provisions of Contract, including General and Supplementary Conditions and Division-1 Specification sections, apply to this work.

"Self-Implementing Cleanup Plan, H.C. Wilcox Technical High School," prepared by TRC Environmental Corporation, June 2010. ("PCB Site Remedial Plan")

PCB Soil Abatement Specifications

40 CFR Part 761

1.2 DESCRIPTION

Work under this item shall include the abatement of: PCB-containing caulk and glazing (Federally-regulated and non-federally regulated PCB) and removal of abutting building materials (concrete, brick, metal door framing, and windows, including window framing, as identified in the Contract Plans and PCB Site Remedial Plan) that are coated with PCB-containing caulk and/or glazing ("PCB Waste").

The work shall be performed by persons who are knowledgeable, qualified, trained and licensed in the removal, treatment, handling, and disposal of PCB contaminated wastes and the subsequent cleaning of the affected environment. Where areas to be abated contain materials with PCBs and asbestos the workers should have all the required asbestos licensing/training as required in Specification Section 28213.

1.2.1 REQUIREMENTS

Federally-regulated PCB-containing caulk and/or glazing (classified as PCB Bulk Product Waste) is defined as any building material manufactured with total PCB concentrations ≥50 mg/kg by weight. All Federally-regulated caulk and glazing shall be removed by the Contractor and all associated building materials in contact with the subject caulk and glazing shall be removed by the Contractor to a depth of at least six inches (6") unless otherwise indicated by the PCB Engineer that more material requires removal. Building material abutting caulks identified as IE1 and IE2 as shown on the Contract Drawings, shall be removed to a depth of at least twelve (12) inches of building materials on either side of the caulk. Metal door frames abutting the subject caulk shall be removed and disposed of as PCB Bulk Product Waste and the associated doors shall be removed prior to abatement activities and shall not be considered PCB Waste. Windows with the subject PCB-containing glazing and associate metal frames shall be removed and disposed of as PCB Bulk Product Waste.

The Owner shall hire a PCB Engineer for the duration of the PCB abatement work. The PCB Engineer shall provide a Project Monitor to oversee the activities of the

Contractor. After removal, verification sampling shall be performed by the Project Monitor. PCB Bulk Product Wastes and abutting building materials shall be considered removed when all verification samples are <1 mg/kg total PCBs.

Non-federally regulated PCB-containing caulk and/or glazing is defined as any building material manufactured with total PCB concentrations ≥1 mg/kg and < 50 mg/kg. All non-federally regulated caulk and glazing shall be removed from the site and disposed of per these Specifications by the Contractor.

In demolition/renovation areas, building materials in contact with the non-federally regulated caulk and glazing shall be removed by the Contractor to a depth of six inches (6") and disposed of by the Contractor as PCB Bulk Product Waste.

Work in non-demolition/renovation areas, shall be scheduled during school vacations, when school is not in session. Such work shall be started and completed within such schedule. Work shall be completed at least ten (10) days prior to students returning to school. Building materials in contact with the non-federally regulated caulk and glazing shall be appropriately cleaned by the Contractor as per these Specifications. Verification samples of the remaining, cleaned building materials shall then be taken by the Project Monitor. If total PCB concentrations in the remaining building materials are ≥1 mg/kg, then an encapsulant, per these Specifications, shall be applied by the Contractor to the area where the caulk and/or glazing were in contact with building materials and new caulk or glazing shall be applied by the Contractor. If total PCB concentrations in the remaining building materials are <1 mg/kg, then the building materials shall be left in place as is.

These Specifications govern all work activities that disturb PCB-containing caulk and glazing and associated building material. All activities shall be performed in accordance with, but not limited to, OSHA Regulation 29 CFR 1926, EPA PCB Regulation 40 CFR Part 761, RCSA 22a-463 through -469 inclusive, and the PCB Site Remedial Plan where applicable.

Abatement work shall include the removal, transportation, and disposal of all PCB Wastes as identified on the Contract Documents, the PCB Site Remedial Plan, and Specifications prior to any phased or planned renovation/demolition work involving the subject PCB areas. All PCB abatement material to be disposed of, except for soil remediation as covered under separate project Specifications, shall be disposed of by the Contractor as PCB Bulk Product Waste in accordance with 40 CFR Part 761.

Deviations from these Specifications require the written approval from the Owner.

1.3 DEFINITIONS

1.3.1 Contaminant Zones

Contaminant zones are those areas of active abatement and the waste storage area.

1.3.2 Abatement

The removal of PCB contaminated building materials in the manner specified in this section.

1.3.3 Federally-Regulated PCB Bulk Product Wastes

Federally-regulated PCB Bulk Product Waste, as defined in §761.3, means waste derived from manufactured products containing PCBs in a non-liquid state, at any concentration where the concentration at the time of designation for disposal is ≥50 ppm PCBs.

1.3.4 Non-federally Regulated PCB Waste

Non-federally regulated PCB waste means waste derived from manufactured products containing PCBs in a non-liquid state, at any concentration where the concentration at the time of designation for disposal is ≥1 mg/kg and < 50 mg/kg PCBs.

1.3.5 PCB Waste

PCB waste means PCB-containing caulk and glazing (Federally-regulated and non-federally regulated PCB) and abutting building materials to the subject caulk and glazing.

1.3.6 PCB Site Remedial Plan

"Self-Implementing Cleanup Plan, H.C. Wilcox Technical High School", Prepared by TRC, June 2010.

1.3.7 Remedial Action Level

Concentration to which PCB contaminated building materials must be removed to verify completion of the abatement work.

1.3.8 PCB Contaminated Building Materials

Consists of those caulks and glazings identified as PCB Bulk Product Wastes and/or non-federally regulated materials. Also may include the building materials in which the caulks and glazings are in contact with which includes, but not limited to, window frames, window glass, brick, concrete, mortar, metal, and stone window sills.

1.3.9 Suitable Waste Storage Container

A container in which PCB wastes are placed for storage prior to transport offsite for disposal that is water tight, lined, and equipped with a cover that prevents the infiltration of rainwater into the container.

1.3.10 Verification Sampling

Sampling performed by the Project Monitor to determine the completion of abatement activities as per the PCB Site Remedial Plan.

1.3.11 Waste Storage Area

The secured location in which the Contractor shall store PCB wastes prior to offsite transport for disposal. The Contractor shall consult with the Owner and the PCB Engineer to identify the location of Waste Storage Areas prior to generating any wastes. This area shall be secured and signed by the Contractor.

1.3.12 PCB Engineer

Responsible for overseeing PCB abatement work and for performing and evaluating verification sample data on behalf of the Owner. The PCB Engineer shall be represented daily onsite by the Project Monitor.

1.3.13 Owner

The Owner is the State of Connecticut, Department of Public Works, as further defined in the General Conditions.

1.3.14 Project Monitor

The onsite representative for the PCB Engineer responsible for overseeing daily work activities. The Project Monitor shall approve all containments prior to performance of abatement work, sampling during and after abatement activities, and for verifying that abatement has been successfully performed and allowing containments to be removed.

1.4 SUBMITTALS

Prior to the performance of the work described in this section the Contractor shall submit to the Owner and Construction Administrator the following on the schedule indicated:

1.4.1 The following must be provided to the Owner, Construction Administrator, and the PCB Engineer within seven (7) days after execution of the Contract.

As related to the PCB abatement work, site-specific Health and Safety Plan including the Emergency Response Plan and provisions for decontamination and a contingency plan for unforeseen emergencies. The PCB Engineer shall review such plan only to determine if the plan meets basic regulatory requirements and the minimum requirements of these Specifications. The review will not determine the adequacy of

the plan to address all potential hazards, as that remains the sole responsibility of the Contractor.

Current certification of employee's OSHA health and safety training (HAZWOPER).

Certification of additional required health and safety training for Supervisors.

Qualifications and experience of the Site Safety Officer (SSO).

1.4.2 Prior to any worker accessing the site to perform the work described in this section, the Contractor shall provide documentation, typed on company letterhead and signed by the Contractor, certifying that all employees assigned to the PCB abatement work listed therein have received the following:

Medical monitoring within the previous twelve (12) months, as required in 29 CFR 1910.120;

Respirator fit testing within the previous twelve (12) months as detailed in 29 CFR 1910.134 (for all employees who must also don a tight-fitting face piece respirator).

1.4.3 At least seven (7) days prior to performing any abatement work that shall generate PCB wastes, the Contractor shall submit copies of the EPA/State-approved permits for the proposed Chemical Waste landfill and a waste profile approved by the proposed landfill indicating that the waste materials to be generated are acceptable to the facility.

1.4.4 Seven (7) days prior to the start of abatement work, material information for the proposed encapsulant indicating that these materials conform to the specifications contained within.

1.4.5 No abatement shall commence until a copy of all required submittals have been received and found acceptable to the Owner and the PCB Engineer. Those employees added to the Contractor's original list will be allowed to perform work only upon submittal, and receipt of, all the above required paperwork to the Owner and PCB Engineer.

1.4.6 Copies of all permits, licenses, certifications, including but not limited to, manifests and/or bill of lading for the removal, transport, and disposal of PCB waste material shall be submitted to the Owner and PCB Engineer no later than five (5) business days after the Contractor receives such documents.

1.4.7 Notice shall be provided to the Owner and the PCB Engineer at least five (5) business days prior to the start of work under this Specification. Such notice shall include an estimated completion date. If this work is phased over the duration of the project, then such notification requirements shall apply to each phase.

1.5 REGULATORY REQUIREMENTS

1.5.1 All abatement and decontamination wastes are to be handled and stored in accordance with the provision of 40 CFR Part 761 Subpart D. The Contractor shall be responsible for all costs associated with investigation and remediation of any releases due to their failure to handle abatement wastes in accordance with the regulatory requirements.

1.6 DELIVERY AND STORAGE

1.6.1 The Contractor shall deliver and store materials in a manner to prevent contamination, segregation, freezing, and other damage.

1.7 MEASUREMENT AND PAYMENT

The Contractor's cost proposal shall be based on the following criteria:

Measurement for payment shall be based on a lump sum price for the removal of all PCB Wastes.

No extra payment shall be made for the construction and removal of containments, any required barrier installation and removal, decontamination, dust control, site preparation, site restoration or waste disposal areas. The cost for these items shall be included in the base bid.

Contractor shall use add deduct prices provided for determining cost for additional work if required. If additional areas requiring work is found outside of an area that would already require containment, the Contractor shall use the lump sum price of the containment plus the unit prices abatement work required. If there is a reduction in the work or the requirements of the work as described in the Contract Documents, the deduct price shall be calculated using the lump sum and unit prices provided.

1.8 PROTECTION

1.8.1 Structures and Surfaces

The Contractor shall protect adjacent structures and surfaces from traffic or any other damage. The Contractor shall repair and reestablish damaged building materials that are to remain in place prior to acceptance of the work.

PART 2 PRODUCTS

2.1 All materials shall be delivered to the job site in the original packages, containers, or bundles bearing the name of the manufacturer, the brand name and product technical description.

2.2 No damaged or deteriorating materials shall be used. If material becomes contaminated with PCBs, the material shall be disposed of as PCB waste material. The cost to dispose of this material shall be at the expense of the Contractor.

2.3 Fire retardant polyethylene sheet shall be in roll size to minimize the frequency of joints, with factory label indicating four (4) or six (6) mil thickness.

2.4 Tape (or equivalent) capable of sealing joints in adjacent polyethylene sheets and for the attachment of polyethylene sheets to finished or unfinished surfaces must be capable of adhering under both dry and wet conditions.

2.5 Containers for storage, transportation and disposal of PCB-containing waste material shall be impermeable and both air and watertight.

2.6 Labels and warning signs shall conform to OSHA 29 CFR 1926, USEPA 40 CFR Part 761, and USDOT 49 CFR Part 172 as appropriate.

2.7 Any planking, bracing, shoring, barricades and/or temporary sheet piling, necessary to appropriately perform work activities shall conform to all applicable federal, state and local regulations.

2.8 Air filtration devices and vacuum units shall be equipped with HEPA filters.

PART 3 EXECUTION

3.1 General Requirements for PCB Containing Building Material Abatement.

All labor, materials, tools, equipment, services, testing, insurance, and incidentals which are necessary or required to perform the work in accordance with applicable governmental regulations, industry standards and codes, and these Specifications shall be provided by the Contractor. The Contractor shall be prepared to work all shifts and weekends throughout the course of this work.

Prior to beginning work per these Specifications, the PCB Engineer and Contractor shall perform a visual survey of each work area and review conditions at the site for safety reasons. In addition, the Contractor shall instruct all workers in all aspects of personnel protection, work procedures, emergency evacuation procedures and use of equipment including procedures unique to this work.

3.2 Prior to the performance of any abatement work, the Contractor shall perform the following tasks.

Shutdown and isolate heating, cooling, and ventilating air systems to prevent contamination to the other areas of the buildings.

Shut down and lock out electrical power, including all receptacles and light fixtures, when feasible. The use or isolation of electrical power will be coordinated with all other ongoing uses of electrical power at the site.

Coordinate all power and fire alarm isolation with the appropriate representatives.

When necessary, provide temporary power and adequate lighting and ensure safe installation of electrical equipment, including ground fault protection and power cables, in compliance with applicable electrical codes and OSHA requirements. The Contractor is responsible for proper connection and installation of electrical wiring.

3.3 If sufficient electrical service is unavailable, the Contractor may need to supply electrical power to the site by fuel operated generator(s). Electrical power supply shall be sufficient for all equipment required for this work in operation throughout the duration of the work.

3.4 Negative pressure must be maintained in each active work area, until the area achieves satisfactory reoccupancy criteria and is approved by the Project Monitor to be deregulated.

3.5 Water service may not be available at the site. Contractor shall supply sufficient water for each shift to operate the decontamination units as well as to maintain the work areas adequately wet.

3.6 Ladders and/or scaffolds shall be in compliance with OSHA requirements, and of adequate length, strength and sufficient quantity to support the scope of work. Use of ladders/scaffolds shall be in conformance with OSHA 29 CFR 1926 Subpart L and X requirements.

3.7 Work performed at heights exceeding six feet (6') shall be performed in accordance with the OSHA Fall Protection Standard 29 CFR 1926 Subpart M including the use of fall arrest systems as applicable.

3.8 Data provided regarding PCB sampling conducted throughout the structure(s) is for informational purposes only. Under no circumstances shall this information be the sole means used by the Contractor for determining the presence and location of all PCB Waste. The Contractor shall verify all field conditions affecting performance of the work as described in these Specifications in accordance with applicable OSHA, USEPA, USDOT, and CTDEP standards. Compliance with the applicable requirements is solely the responsibility of the Contractor.

3.9 The PCB Engineer will provide a Project Monitor to oversee the activities of the Contractor. No PCB abatement work shall be performed until the Project Monitor is on-site.

3.10 All interior and exterior abatement areas are to be established in the same manner.

The abatement Contractor shall establish a Control Area around each area where removal actions are being performed. Only properly trained personnel associated with the removal or abatement will be allowed within the Control Areas that will be established by placing barriers with signs indicating that access to the area is restricted. The Contractor's field inspector will maintain the Control Areas and escort unauthorized personnel from the area promptly. Only those personnel actively working on the removal, abatement, and soil excavation actions will be allowed within the Regulated/Containment Area and they shall be equipped with appropriate Personal Protective Equipment (PPE).

The Contractor shall pre-clean the work areas using HEPA filtered equipment (vacuum) and/or wet methods as appropriate, collecting and properly containing all dust and debris identified as PCB Waste. Vacuum units, of suitable size and capabilities for the project, shall have HEPA filters capable of trapping and retaining at least 99.97 percent of all monodispersed particles of three micrometers in diameter or larger. Do not use methods that raise dust, such as dry sweeping or vacuuming with equipment not equipped with HEPA filters.

After pre-cleaning, movable objects shall be removed from the work areas with the utmost care to prevent damage of any kind and relocated to a temporary storage location coordinated with the PCB Engineer. The Contractor is responsible for protecting all fixed objects that are permanent fixtures or are too large to remove and remain inside the Regulated Area. Fixed objects shall be enclosed with one layer of six (6) mil polyethylene sheeting sealed with tape.

The Contractor shall establish remote to the Regulated Area but within the Control Area, a Worker Decontamination Enclosure System consisting of Equipment Room, Shower Room and Clean Room in series.

The Shower Room shall be of sufficient capacity to accommodate the number of workers. One shower stall shall be provided for each eight (8) workers. Showers shall be equipped with hot and cold or warm running water through the use of electric hot water heaters supplied by the Contractor. No worker or other person shall leave a Regulated Area without showering. Shower water shall be collected.

The Contractor shall ensure that no personnel or equipment be permitted to leave the Control Area until proper decontamination procedures (including HEPA vacuuming, wet wiping and showering) to remove all PCB debris have occurred. No PCB-contaminated materials or persons shall enter the Clean Room.

The Contractor shall seal off all windows, doorways, skylights, ducts, grilles, diffusers, vents, light fixtures, electrical receptacles, suspended ceiling tile systems and any other openings between the Regulated Area and the uncontaminated areas outside of the Regulated Area, including the outside of the building, with critical barriers consisting of a minimum of one (1) layer of six (6) mil polyethylene sheeting

securing the edges with tape. Doorways and corridors which will not be used for passage during work and separate the regulated areas from occupied areas must be sealed with fixed critical barriers constructed of 2" x 4" wood or metal framing 16" O.C., with ½" plywood on the occupied side and two layers of six (6) mil polyethylene sheeting on the Regulated Area side to prevent unauthorized access or air flow.

A Negative Pressure Enclosure (NPE) shall be constructed by the Contractor via covering of floor and wall surfaces with polyethylene sheeting sealed with tape. Polyethylene shall be applied alternately to floors and walls. Cover floors first, with a layer of six (6) mil polyethylene sheeting, so that polyethylene extends at least twelve (12) inches up on wall. Cover wall with a layer of six (6) mil polyethylene sheeting to twelve (12) inches beyond the wall/floor intersection, thus overlapping the floor material by a minimum of twenty-four (24) inches. Repeat the process for the second layer of polyethylene. There shall be no seams at wall-to-floor joints. Contiguous to the NPE, construct a single chamber airlock from six (6) mil polyethylene sheeting for entry/exit purposes into the regulated area.

Conspicuously label and maintain emergency and fire exits from the Regulated Area satisfactory to fire officials.

The Contractor shall create a negative pressure differential in the range of 0.02 to 0.04 inches of water column between the Regulated Area and surrounding areas by the use of acceptable negative air pressure equipment. Exhaust air filtration units shall be equipped with HEPA filters capable of providing sufficient air exhaust to create a minimum pressure differential of 0.02 inches of water column, and to allow a sufficient flow of air through the area providing 4 air changes per hour. The Contractor shall provide a sufficient quantity of HEPA air filters to maintain the pressure differential throughout the duration of the project. An automatic warning system shall be incorporated into the equipment to indicate pressure drop or unit failure. Continuously monitor the pressure differential between the Regulated Area and surrounding area to ensure exhaust air filtration equipment maintains a minimum pressure differential of 0.02 inches of water column. The Contractor shall provide actual air flow measurement of filtration units while the unit is in place and calculate actual air exchange rates. No air movement system or air filtering equipment shall discharge unfiltered air outside the Regulated Area.

The Contractor shall post warning signs to deter unauthorized personnel from entry. Additional signs may require posting following construction of workplace enclosure barriers.

3.11 Personnel Protection

The Contractor shall utilize all appropriate engineering controls and safety and protective equipment while performing the work in accordance with applicable

OSHA, USEPA, USDOT, CTDEP, CTDPH regulations, and other Contract provisions.

The Contractor shall provide and require all workers to wear protective clothing in the Regulated Areas where PCB contamination exists. Protective clothing shall include impervious coveralls with elastic wrists and ankles, head covering, gloves and foot coverings.

Respiratory protection shall be provided and shall meet the requirements of OSHA as required in 29 CFR 1910.134. A formal respiratory protection program must be implemented in accordance with 29 CFR 1910.134. The Contractor shall provide respirators from among those approved as being acceptable for protection by the National Institute for Occupational Safety and Health (NIOSH) under the provisions of 30 CFR Part ll.

All other necessary personnel protective equipment (i.e. hardhat, work boots, safety glasses, hearing protection, etc.) required to perform the PCB abatement work activities shall conform to all applicable federal, state and local regulations and other applicable provisions of the Contract.

All other qualified and authorized persons by the Owner and/or Contractor entering into a Regulated Area shall be required to adhere to the requirements of personnel protection as stated in this section and all other applicable provisions of the Contract. All unqualified and unauthorized persons shall be escorted outside of the Regulated Area and if due to other provisions of the Contract, escorted outside of the project site during the PCB work.

3.12 PCB Abatement Procedures

The Site Supervisor, as the OSHA Competent Person shall be at the site at all times during the performance of abatement work.

The Contractor shall not begin abatement work until authorized by the Project Monitor, following a pre-abatement visual inspection.

All workers and authorized persons shall enter and leave the Regulated Area through the contiguous airlock, leaving contaminated protective clothing in the airlock for disposal of as PCB contaminated waste. No one shall eat, drink, smoke, chew gum or tobacco, or apply cosmetics while in a Regulated Area.

The following details the extent of each phase of operation designated for this work. Phase areas may be combined or divided at the direction of the PCB Engineer. Proceed through the sequencing of the work phases under the direction of the Engineer.

See the PCB Site Remedial Plan and other Contract Drawings provided for the site for specific locations of PCB containing caulks and glazing. The specific locations for these materials and amount of associated building materials to be removed as well are indicated on these drawings and the PCB Site Remedial Plan.

During removal, the Contractor shall spray PCB containing building material with water using airless spray equipment capable of providing a "mist" application to reduce airborne dust. Hose length shall be sufficient to reach all of the Regulated Area. Do not "flood" the area with hose type water supply equipment with the potential to create water releases from the regulated area.

The Contractor shall employ mechanical methods such as cutting, grinding, and pneumatic hammers to remove PCB contaminated wastes. The methods employed must not damage the integrity of the containment structure and shall not create a breach through which contaminated dust may escape. The Contractor shall be responsible for all costs associated with decontamination and remediation in the case of a containment breach.

In order to minimize PCB concentrations inside the Regulated Area, the Contractor shall remove the materials in manageable sections. In addition, PCB Waste materials removed from any elevated level shall be carefully lowered to the floor.

The Contractor shall promptly place the PCB Waste material in disposal containers (six (6) mil polyethylene bags/ poly-lined dumpsters, etc.) as it is removed. Large components removed intact may be wrapped in one (1) layer of six (6) mil polyethylene sheeting secured with tape. As the disposal containers are filled, the Contractor shall promptly seal the containers, apply caution labels and clean the containers before transportation to the airlock. Bags shall be securely sealed to prevent accidental opening and leakage by taping in gooseneck fashion. Small components and PCB Waste material with sharp-edged components (e.g. nails, screws, metal lath, tin sheeting) which could tear polyethylene bags and sheeting shall be placed in clean drums and sealed with locking ring tops. Drums may not be placed intact into final waste disposal containers intact and may be reused by the Contractor after the contents have been emptied. However, any drums use to handle wastes must be broken down and disposed of properly with other PCB wastes.

All waste containers shall be leak-tight. Containers shall be decontaminated by wet cleaning and HEPA vacuuming within the airlock prior to exiting the regulated area. Wet clean each container thoroughly before moving to a Waste Holding Area.

If at any time during PCB Waste removal, the Project Monitor should suspect contamination of areas outside the Regulated Area, the Contractor shall immediately stop all abatement work and take steps to decontaminate these areas and eliminate causes of such contamination. Unprotected individuals shall be prohibited from entering contaminated areas.

After completion of abatement work, all surfaces from which PCB Waste has been removed shall be wet brushed, using a nylon brush, wet wiped and sponged or cleaned by an equivalent method to remove all visible material (wire brushes are not permitted). Cleaning shall also include the use of HEPA filtered vacuum equipment.

The Contractor shall also remove and containerize all visible accumulations of PCB Waste and/or PCB contaminated debris which may have splattered or collected on the polyethylene engineering controls/barriers.

The Contractor shall clean surfaces of contaminated containers and equipment thoroughly by vacuuming with HEPA filtered equipment and wet sponging or wiping before moving such items into the airlock for final cleaning and removal to uncontaminated areas.

The Contractor shall remove contamination from the exteriors of the air filtration devices, scaffolding, ladders, extension cords, hoses and other equipment inside the Regulated Area. Cleaning may be accomplished by brushing, HEPA vacuuming and/or wet cleaning. The Contractor shall wet wipe the Regulated Area beginning at the point farthest away from the negative air filtration units using cotton rags or lint free paper towels. Rags and towels shall be disposed of after each use. Workers should avoid the use of dirty rags to insure proper cleaning of surfaces. Mop the entire floor with a clean mop head and amended water. Water shall be changed frequently

Once the Regulated Area surfaces have dried, the Project Monitor shall perform a thorough post abatement visual inspection. The Project Monitor will visually inspect the Regulated Area and the surrounding Control Area to determine that the Contractor has sufficiently decontaminated and removed any dust that might contain PCBs. All surfaces within the Regulated Area, including but not limited to ledges, beams, and hidden locations shall be inspected for visible residue. Evidence of dust contamination that would be indicative of PCB contamination identified during this inspection will necessitate further cleaning as heretofore specified. The area shall be re-cleaned at the Contractor's expense, until the standard of cleaning is achieved.

Once the area has received a satisfactory post-abatement visual inspection, any equipment, tools or materials not required for completion of the work, shall be removed by the Contractor from the Regulated Area. Negative air filtration devices shall remain in place and operating for the remainder of the clean-up operation.

3.13 Phased PCB Abatement Procedures

Should the potential exist for an unsafe condition to be produced by removing PCB contaminated building materials prior to removing clean materials, then the Contractor shall notify the Owner and the PCB Engineer and Project Monitor of such concerns and mitigate potentially unsafe conditions.

Should PCB contaminated building material need to remain to prevent an unsafe situation, the PCB Engineer shall collect the required verification samples prior to the performance of any demolition in the area. The Contractor shall then physically demark the line of clean building materials as determined by the verification sampling on the structure by painting or otherwise marking the structure so that it is clearly visible.

Once the area is marked, the Contractor may remove clean building materials as described elsewhere in the Contract Document. After the clean building materials have been removed to the marked line, PCB Contaminated building materials shall be abated according to the procedures stated in section 3.12 of this specification.

3.14 Post-Abatement Reoccupancy Procedures

The Project Monitor shall collect verification samples as per the EPA Region 1 Standard Operating Procedure for Sampling Concrete at the frequency specified in the approved PCB Site Remedial Plan. The verification samples will be analyzed for PCBs using EPA Methods 3540 and 8082. Analysis of verification samples will be expedited but the Contractor shall expect 48 to 72 hours (these hours do not include weekend and/or holiday hours) delay until analytical results are available.

Federally and Non-federally Regulated PCB Waste (demolition/renovation areas): In areas where PCB Wastes have been removed along with the associated building materials, the remedial standard to be achieved by all verification samples is <1 mg/kg total PCBs. If this standard is achieved then additional reoccupancy work will be performed. If the remedial standard is exceeded, the Contractor shall be instructed to remove additional building materials as instructed by the Project Monitor.

Non-federally Regulated PCB Waste (non-demolition areas): Work involving non-federally regulated PCB waste in non-demolition/renovation areas, shall be scheduled during school vacations, when school is not in session. Such work shall be started and completed within such schedule. Work shall be completed at least ten (10) days prior to students returning to school. In non-demolition/renovation areas, non-federally regulated PCB-containing caulks and/or glazing shall be removed and the associated building materials shall be cleaned in accordance with these Specifications and left in place. The remedial standard to be achieved by the verification samples collected from the associated building materials is <1 mg/kg total PCBs. If this standard is achieved in the building materials left in place, then additional reoccupancy work will be performed. If this standard is not achieved, then an encapsulant shall be applied by the Contractor to the area where the caulk and glazing were in contact with building materials and after the encapsulant has cured, new caulk or glazing shall be applied by the Contractor.

Following the collection and analysis of verification samples indicating that remediation goals have been achieved or the encapsulation of other materials, the Project Monitor shall collect wipe samples of surfaces within the Containment Area

to determine if the decontamination performed by the Contractor has been sufficient to remove potentially PCB containing dust. The PCB Engineer shall obtain expedited analyses of these samples from an outside laboratory, but the Contractor shall expect 48 to 72 hours (these hours do not include weekend and/or holiday hours) delay until analytical results are available. The PCB Engineer shall instruct the Contractor to perform additional decontamination if wipe sample results are ≥1.0 μg/100 cm2. Areas which do not comply shall continue to be cleaned by and at the Contractors expense, until the specified Standard of Cleaning is achieved as evidenced by results of wipe testing. When the Regulated Area passes the re-occupancy clearance, controls established by these Specifications may be removed.

Wipe sampling will not begin until after the area has received an acceptable post abatement visual inspection and verification sample results indicate compliance with remedial standards.

Analysis shall follow the requirements of EPA Methods 3540 and 8082.

Each homogeneous Regulated Area which does not meet the clearance criteria shall be thoroughly recleaned using HEPA vacuuming and/or wet cleaning, with the negative pressure ventilation system in operation. New samples shall be collected in the Regulated Area. The process shall be repeated until the Regulated Area passes the test, with the cost of repeat sampling being borne entirely by the Contractor.

For a PCB Waste abatement project with more than one homogeneous Regulated Area, the release criterion shall be applied independently to each Regulated Area.

These clearance sampling procedures shall be implemented for both interior and exterior NPE work areas.

3.15 Post Abatement Work Area Deregulation

The Contractor shall remove all remaining polyethylene, including critical barriers, and airlocks with the negative air filtration devices in operation. HEPA vacuum and/or wet wipe any visible residue which is uncovered during this process. All waste generated during this disassembly process shall be discarded as PCB Bulk Product Waste.

A final visual inspection of the work area shall be conducted by the PCB Engineer and the Project Monitor to ensure that all visible accumulations of PCB Waste materials have been removed and that no equipment or materials associated with the abatement work remain.

The Contractor shall restore all work areas and auxiliary areas utilized during work to conditions equal to or better than original. Any damage caused during the performance of the work activity shall be repaired by the Contractor at no additional expense to the Owner.

3.16 Encapsulation Procedures

The contractor shall encapsulate building materials located in areas where renovation/demolition is not being performed as indicated on the Contract Drawings and these Specifications with an elastomeric, crack bridging, anti-carbonation, protective coating to be applied as the encapsulant. Following completion of encapsulant application, including cure time, the Contractor shall reinstall caulk as per and meeting the specifications contained within Section 079200 – Joint Sealants.

The Contractor shall install materials in accordance with all safety and weather conditions required by manufacturer or as modified by applicable rules and regulations of local, state and federal authorities having jurisdiction. Consult Material Safety Data Sheets for complete handling recommendations.

All encapsulant materials shall be delivered in original, unopened containers with the manufacturer's name, labels, product identification, and batch numbers. Damaged material shall be removed from the site immediately. All materials shall be stored off the ground and protect from rain, freezing or excessive heat until ready for use.

The Contractor shall not apply material if it is raining or snowing or if such conditions appear to be imminent. Minimum application temperature are 45°F (7°C) and rising. Precautions shall be taken by the Contractor to avoid damage to any surface near the work zone due to mixing and handling of the specified material.

The encapsulant shall be Sikagard 550W (or 670W) Elastocolor, as manufactured by Sika Corporation, 1682 Marion Williamsport Road, Marion, Ohio, or equivalent. The Contractor shall provide submittals for the encapsulant to be used prior to bringing the materials onsite for use.

Elastomeric Acrylic Coating shall be one hundred percent (100%) Acrylic Emulsion with the following properties:

3.16.1 Water vapor permeable

3.16.2 Can bridge dynamically moving cracks

3.16.3 Crack bridging properties maintained at low temperatures

3.16.4 The material shall be resistant to dirt pick-up and mildew

3.16.5 Pot Life: indefinite

3.16.6 Tack Free Time 6 Hours @ 73°F, 50% Relative Humidity. Final Cure < 24 Hours

3.16.7 Carbon Dioxide Diffusion: μCO2 214,000 Carbon Dioxide Diffusion Resistance at 16 mils (400 microns)

3.16.8 SdCO2 = 299 ft. (equivalent air thickness) i.e. Approx. 9-in. of standard concrete cover.

3.16.9 Water Vapor Diffusion: μH2O 2,146 Water Vapor Diffusion Resistance at 16 mils SdH2O = 2.6 ft. (0.8m)

3.16.10 Moisture Vapor permeability (ASTM E96) 14.5 perms

3.16.11 Tensile Properties (ASTM D-412 Modified)

3.16.12 7 day-Tensile strength 190 psi (1.3 MPa) - Elongation at break 820% - 340% @ 0°F (-18°C)

3.16.13 Crack Bridging (at 16 mils = 400 microns DFT

3.16.14 Static (at –4°F/-20°C) 30 mils (0.75mm)

3.16.15 Dynamic>1000 cycles (at –4°F/-20°C) 12 mils (0.30mm)

3.16.16 Resistance to wind driven rain (TT-C-555B): No passage of water through coating

3.16.17 Weathering (ASTM G-23) 10,000 hours excellent, no chalking or cracking.

3.16.18 Solids Content: by weight – 62% by volume – 55%

3.16.19 Flame Spread and Smoke Development (ASTM E-84-94)

3.16.20 Flame Spread 5 Smoke Development 5 Class Rating A

Note: Tests above were performed with the material and curing conditions @ 71°F – 75°F and 45-55% relative humidity.

Building substrate to which the encapsulant coating is to be applied must be clean, sound, and free of surface contaminants. Remove dust, laitance, grease, oils, curing compounds, form release agents and all foreign particles by mechanical means. Substrate shall be in accordance with ICRI Guideline No. 03732 for coatings and fall within CSP1 to CSP3.

The Contractor shall stir materials to ensure uniformity using a low speed (400-600 rpm) drill and paddle. To minimize color variation, blend two batches of material. For small defects and cracks the Contractor shall apply Surface Filler by "Brush Grade" encapsulant generously over the center of the cracks. The Contractor shall feather material over a two-inch wide area and allow a minimum 24 hours to cure before overcoating. For large defects and cracks (cracks >20mils) the Contractor shall blow out the cut with oil-free compressed air and fill the crack with joint sealant conforming to specifications allowing for a small crest to remain as this will compensate for any shrinkage that might occur. The Contractor shall allow 24 hours-minimum cure before over coating with encapsulant.

For the final coating application, the Contractor shall apply by brush or roller over the entire area to be encapsulated by moving in one direction. The Contractor shall apply a minimum of two coats. Each coat should be applied at a rate not to exceed 100 sq. ft. per gallon. The total dry film thickness shall be minimum 8 - 10 dry mils per coat. Allow a minimum of 2 hours prior to re-coating. When applying the coating, never

stop the application until the entire surface has been coated. Always stop application at an edge, corner, or joint.

3.17 Waste Disposal

If the Contractor chooses to store soil onsite prior to transport offsite for disposal, the Contractor shall construct a secured Waste Storage Area at a location agreed to by the Contractor and the PCB Engineer within contract limit lines. The contract limit lines are to be secured as described elsewhere in these specifications and entry shall be limited to Contractor Personnel only. The Waste Storage Area shall enclose all Suitable Waste Storage Containers actively in use with temporary fencing. The fence shall be marked with a Large M_L mark as specified in 40 CFR Part 761 Subpart C.

Unless otherwise specified by the Owner, all removed materials and debris resulting from execution of this work shall become the responsibility of the Contractor and removed from the premises. Materials not scheduled for reuse shall be removed from the site and disposed of in accordance with all applicable Federal, State and Local requirements.

Waste removal dumpsters and cargo areas of transport vehicles shall be lined with a layer of six (6) mil polyethylene sheeting to prevent contamination from leaking or spilled containers. Floor sheeting shall be installed first, and shall be extended up sidewalls 12-inches. Wall sheeting shall overlap floor sheeting 24-inches and shall be taped into place. A single liner may be employed as long as it entirely covers the interior of the waste container.

All containers used to transport PCB Waste for disposal must be marked with a Large ML mark as specified in 40 CFR Part 761 Subpart C. The signs must be posted so that they are plainly visible.

Ensure all waste containers (bags, etc.) are properly packed, sealed and labeled with USEPA and USDOT shipping labels. For each shipment of PCB Waste, the Contractor shall complete a PCB waste shipment manifest.

Authorized representatives signing waste shipment records on behalf of the generator must have USDOT Shipper Certification training in accordance with HMR 49 CFR Parts 171-180.

Transport vehicles hauling PCB Waste shall have appropriate USDOT placards visible on all four (4) sides of the vehicle.

The Contractor shall dispose of PCB Waste at a TSCA-permitted facility.

Any PCB Waste materials which also contain other hazardous contaminants shall be disposed of in accordance with the EPA's Resource Conservation and Recovery Act (RCRA), CTDEP and ConnDOT requirements. Materials may be required to be

stored on-site and tested by the Project Monitor to determine proper waste disposal requirements.

3.18 Decontamination

The Contractor shall decontaminate all moveable equipment that contact PCB Wastes in accordance with the procedures specified in §761.79(c). The Contractor shall not remove any equipment from the Contaminant Zone until it has been properly decontaminated.

Specifically, the Contractor shall employ double wash/rinse procedures as specified in 40 CFR Part 761 Subpart S or swab non-porous surfaces that have contacted PCB wastes with a solvent as specified in §761.79(c)(2)(i). The Contractor shall segregate all liquid waste streams and be responsible for characterizing these wastes for disposal purposes. Solid wastes generated during decontamination shall be stored for disposal with the other PCB wastes generated during remediation activities.

The PCB Engineer shall be responsible for ensuring that decontamination procedures are followed and that wastes are appropriately characterized and disposed of properly.

3.19 Project Closeout Data:

Provide the Owner and PCB Engineer, within 30 days after PCB Waste has been disposed of, a compliance package; which shall include, but not be limited to, the following:

3.19.1 Site Supervisor job log;
3.19.2 Completed waste shipment records.

The Contractor shall submit the original completed waste shipment records to the PCB Engineer.

3.20 Method of Measurement:

No measurement will be made for the abatement work in this Section. The completed work shall be paid as a lump sum. The lump sum bid price for PCB abatement shall include the specialty services of the PCB Removal Contractor including: labor, materials, equipment, insurance, permits, notifications, submittals, personal air sampling, personal protection equipment, temporary enclosures, utility costs, incidentals, fees and labor incidental to the removal of PCB Wastes, including close out documentation.

Measurement for payment for waste disposal will be on a per ton basis. The unit price for PCB Bulk Product Waste Disposal shall include providing adequate containers for storage of PCB wastes until they are removed from the site and the transport and disposal of these materials at a TSCA-permitted facility. Payment for

the disposal of PCB Bulk Product Waste disposal shall be made when the Contractor submits manifests with the mass of waste disposed and signed by the receiving facility and the Certificates of Disposal provided by the waste disposal facility for each manifested load to the Engineer. Once the manifest and Certificate of Disposal has been received, the Owner shall make payment to the Contractor.

Deducts from payment for containments without negative pressure will be made on a per containment basis. The deduct cost shall account for construction of containment as described in this section without the negative pressure generating air handling units and HEPA filtration of discharge air.

Pay Item	Pay Unit
PCB Abatement	Lump Sum
PCB Waste Disposal	Per Ton

Unit Price Schedule – Additional or Reduced PCB Abatement

This schedule applies only to items beyond the scope specified in the Contract Documents or if there is a reduction in the scope of work or the requirements of the work. Costs associated with the use of unit price items is inclusive of all labor, equipment, materials, and overhead and profit.

Item	Item Description	Unit	Add/Deduct Cost
1	Containment Area – Set up of containment area (up to 400 square feet area) as described in these specifications.	EA	$1,300
2	Containment Area – Set up of containment area (up to 400 square feet area) as described in these specifications except for installation of equipment used to create and maintain negative pressure.	EA	$1,100
3	PCB Contaminated caulk abatement with removal of 6" of building materials on either side of the caulked joint.	LF	$4.73
4	PCB Contaminated caulk abatement with removal of 12" of building materials on either side of the caulked joint	LF	$8.78
5	PCB Contaminated caulk abatement with no removal of building materials	LF	$3.15
6	Removal of door and contaminated caulk	EA	$125

SECTION 072600 - SURFACE APPLIED VAPOR REDUCTION SYSTEMS

PART 1 - GENERAL

1.1 SECTION INCLUDES

A. Furnish all labor, materials, tools and equipment as necessary to perform installation of a surface applied moisture mitigation system (vapor retarder) on new and existing concrete slabs free of oil contamination or previously treated with a sealer, as shown on drawings and/or as specified in this section.

B. Repairs and preparation of concrete floors.

C. Related Sections:

1. See section 012000 Contract Considerations.
2. See section 033000 Cast-in-Place Concrete.
3. See section 096400 Wood Flooring.
4. See section 096500 Resilient Flooring.
5. See section 096723 Resinous Flooring.

1.2 REFERENCES

A. ASTM F 1869 - Standard Test Method for Measuring Moisture Vapor Emission Rate of Concrete Subfloor Using Anhydrous Calcium Chloride; 1998.

B. ASTM E 1907 – Standard Practices for Determining Moisture-Related Acceptability of Concrete Floors to Receive Moisture-Sensitive Finishes; 1997.

C. ASTM E 96 - Standard Test Methods for Water Vapor Transmission of Materials; 1995.

D. ASTM D 4541 B - Pull-Off Strength of Coatings; 1995, Modified.

1.3 SUBMITTALS

A. Product Data:
1. Submit manufacturer's literature and installation instructions for each product.
2. Test data: Submit independent testing laboratory data for product, evidencing:
   a. up to 97% reduction of water vapor transmission (tested as per ASTM E 96-95).
   b. product is insensitive to alkaline environment up to pH 14 (tested as per ASTM D 1308).
3. Submit manufacturers sample warrantee.

1.4 QUALITY ASSURANCE

A. Manufacturer Qualifications:

1. Company specializing in manufacturing products specified in this Section with minimum 5 years documented experience.

B. Installer Qualifications:
1. Acceptable to manufacturer with documented experience on at least 3 projects of similar nature in past 5 years and/or training provided by the product manufacturer.

1.5 DELIVERY, STORAGE AND HANDLING

A. Deliver and store in a dry, well ventilated area at minimum 50 deg F (10 deg C) and maximum 90 deg F (32 deg C).

B. Deliver materials in manufacturer's unopened containers fully identified with brand, type, grade, class and all other qualifying information. Provide Material Safety Data Sheets for each product.

1.6 SYSTEM REQUIREMENTS

A. Coordinate floor sealing installation with other trades.

B. Provide materials and accessories in timely manner so as not to delay Work.

1.7 PROJECT CONDITIONS

A. Maintain surfaces to be sealed and surrounding air temperature at not less than 50 deg F (10 deg C).

B. Exercise caution when temperatures exceed 90 deg F (32 deg C).

1.8 WARRANTY

A. Special Warranty: Manufacturer's standard form, in which manufacturer agrees to repair or replace components of the flooring system, including the finish floor covering, that fail in materials or workmanship due to vapor transmission for five (5) years.

PART 2 - PRODUCTS

2.1 MANUFACTURERS

A. Available Products For All Locations Indicated Unless Otherwise Specified: Subject to compliance with requirements, products that may be incorporated into the Work include, but are not limited to, the following:
a. Vaportight Coat SG-2 by Aquafin, Inc.
b. Koester VAP 1 pH by Koester American Corporation.
c. MoistureBloc Universal by Vexcon Chemicals, Inc.

B. Available Products for Resinous Flooring Locations: Subject to compliance with requirements, products that may be incorporated into the Work include, but are not limited to, the following:
   a. Vaportight Coat SG-3 by Aquafin, Inc.
   b. Koester VAP 1 2000 by Koester American Corporation.
   c. MoistureBloc Emulsion Vapor Reduction System by Vexcon Chemicals, Inc.

2.2 MATERIALS

A. Moisture Vapor Emission Reduction Control System (concrete floor sealer) For All Locations Indicated Unless Otherwise Specified: A 100% solids, solvent free, moisture tolerant, high density, low odor, chemically enhanced epoxy based product which must reduce vapor emissions (MVER) to 3 lbs/24 hrs*1000 SF or less and be compatible with floor finishes and adhesives approved by the manufacturer. Characteristics:

1. Permeance: (ASTM E-96) <1.0 perm
2. Alkaline Resistance: (ASTM D-1308) up to pH 14

B. Moisture Vapor Emission Reduction Control System (concrete floor sealer) For Resinous Flooring Locations: A 100% solids, solvent free, moisture tolerant, high density, low odor, chemically enhanced epoxy based product which must reduce vapor emissions (MVER) to 3 lbs/24 hrs*1000 SF or less and be compatible with floor finishes and adhesives approved by the manufacturer. Characteristics:

1. Permeance: (ASTM E-96) <0.5 perm
2. Alkaline Resistance: (ASTM D-1308) up to pH 14

PART 3 - EXECUTION

3.1 EXAMINATION

A. Examine all construction substrates and conditions under which concrete floor sealer material is to be installed. Do not proceed with the concrete floor sealer installation until unsatisfactory conditions are corrected.

B. Assure that surfaces to be treated do not contain any kind of sealer or organic compounds.

C. Anhydrous Calcium Chloride Testing as per ASTM F-1869:
   1. Before installation of concrete floor sealer: use tests carried out by Architect/Engineer during study phase, and confirm by testing through installer or independent laboratory prior to installation of concrete floor sealer.

3.2 PREPARATION

A. Protect adjacent surfaces not designated to receive concrete floor sealer.

B. Substrate preparation:

1. Remove existing floor coverings, coatings and adhesives down to bare concrete, curing compounds, efflorescence, dust, grease, laitance, etc. with steel shot blasting, abrasive (sand) blasting or grinding using a diamond cup blade. Acid etching is not allowed.

2. Assure that all slabs have surface profile ICRI CSP 3 - 5 (ICRI, Des Plaines, IL, Guideline No. 03732.) for mechanical bond (i.e. medium grit sandpaper). Smooth surfaces are not acceptable, they must be shot blasted.

3. Burn off reinforcing fibers and collect and vacuum remains.

4. Repair defective areas such as honeycombs, cracks or other defects with a suitable repairing or manufacturer recommended mortar.

5. Treat saw cut and expansion joints as per manufacturer's application guideline.

6. Install cementitious underlayment, leveling mortars, flash patching, on top of surface applied concrete floor sealer.

7. Carefully rinse or pre-dampen several times all the surfaces to be treated with clean water, leave no standing water.

3.3 INSTALLATION

A. Mix concrete floor sealer material in proportions recommended by manufacturer.

B. Apply concrete floor sealer material in quantities as per manufacturer's specifications and recommendations.

   1. Apply in one coat at specified rate.

   2. Apply using non-shed synthetic roller or notched squeegee to the still moist substrate, and carefully scrub it into the pores with a long handled scrub brush. Follow with a non-shed synthetic roller to achieve a uniform coverage.

C. Where specified install leveling course as per manufacturer's specifications and recommendations.

D. Where specified install floor covering as per manufacturer's specifications and recommendations.

3.4 ACCEPTANCE

A. Remove left over materials and any foreign material resulting from the work from the site.

B. Clean adjacent surfaces and materials.

END OF SECTION 072600

SECTION 230900 - INSTRUMENTATION AND CONTROL FOR HVAC

PART 1 - GENERAL

1.1 RELATED DOCUMENTS

A. Drawings and general provisions of the Contract, including General and Supplementary Conditions and Division 01 Specification Sections, apply to this Section.

B. The following sections constitute related work:

1. Section 019113 - Commissioning for additional work associated with this section.
2. Section 23 – General Provisions
3. Section 23 – Meters and Gages.
4. Section 23 – Condensing Boilers
5. Section 23 – Rotary Air Cooled Screw Chillers
6. Section 23- Laboratory Airflow Controls
7. Section 23 - Air Distribution
8. Section 23 – Enclosed Controllers
9. Section 23 - Testing, Adjusting, and Balancing
10. Section 26 – Common Work Results for Electrical
11. Section 26 - Wiring Methods
12. Section 26 - Electrical Power (Uninterruptible Power Supplies,)
13. Section 26 - Low-Voltage Distribution
14. Section 26 – Lighting

1.2 DESCRIPTION

A. The control system and work shall be an extension of the existing Automated Logic DDC control system. The existing system must be maintained fully functional throughout the construction to maintain service to existing areas of the building not being renovated. Automated Logic vendor shall provide **ALL** required hardware, software, equipment, programming, wiring, power, etc for a fully functional and complete operational system.

B. General: The control system shall consist of a high-speed, peer-to-peer network of DDC controllers and a web-based operator interface. Depict each mechanical system and building floor plan by a point-and-click graphic. A web server with a network interface card shall gather data from this system and generate web pages accessible through a conventional web browser on each PC connected to the network. Operators shall be able to perform all normal operator functions through the web browser interface.

C. The system shall directly control HVAC equipment as specified in Sequences of Operation. Each zone controller shall provide occupied and unoccupied modes of operation by individual zone. Furnish energy conservation features such as optimal start and stop, night setback, request-based logic, and demand level adjustment of setpoints as specified.

D. Provide for future system expansion to include monitoring of occupant card access, fire alarm, and lighting control systems. Provide general monitoring of alarms and control of respective systems under current project as specified in sequence of operations.

E. System shall use the BACnet protocol for communication to the operator workstation or web server and for communication between control modules. Schedules, setpoints, trends, and alarms specified in Section 4 Sequences of Operation shall be BACnet objects.

F. The web based system shall be accessible remotely through internet by anyone who has been granted access permission.

1.3 PRE-SUBMITTAL CONFERENCE

A. Control contractor shall arrange a meeting with the engineer and commissioning agent to review sequence of operation prior to submission to engineer to address questions and interpretations of the sequences and control specifications prior to shop drawing submission. Submissions done without prior meeting shall be returned **NOT REVIEWED**.

1.4 DEFINITIONS

A. DDC: Direct digital control.

B. I/O: Input/output.

C. LonWorks: A control network technology platform for designing and implementing interoperable control devices and networks.

D. MS/TP: Master slave/token passing.

E. PC: Personal computer.

F. PID: Proportional plus integral plus derivative.

G. RTD: Resistance temperature detector.

1.5 PRODUCTS FURNISHED BUT NOT INSTALLED UNDER THIS SECTION

A. Section 23 - Heating and cooling piping:

1. Control valves
2. Flowmeters
3. Flow switches
4. Press and temp sensor wells & sockets
5. Temp sensor wells and sockets

B. Section 23 - Duct accessories:

1. Airflow stations

2. Automated dampers

3. Terminal unit controls

1.6 PRODUCTS INSTALLED BUT NOT FURNISHED UNDER THIS SECTION

B. None

1.7 PRODUCTS NOT FURNISHED OR INSTALLED BUT INTEGRATED WITH THE WORK OF THIS SECTION

A. General:

1. Coordination Meeting: The Installer furnishing the DDC network shall meet with the Installer(s) furnishing each of the following products to coordinate details of the interface between these products and the DDC network. The Owner or his designated representative shall be present at this meeting. Each Installer shall provide the Owner and all other Installers with details of the proposed interface including PICS for BACnet equipment, hardware and software identifiers for the interface points, network identifiers, wiring requirements, communication speeds, and required network accessories. The purpose of this meeting shall be to insure there are no unresolved issues regarding the integration of these products into the DDC network. Submittals for these products shall not be approved prior to the completion of this meeting.

B. Section 01 – Building Systems Commissioning 019113 for commissioning requirements that apply to this section.

C. Section 23 - Heat boilers and accessories:

1. Boiler controls: The boiler vendor shall furnish boilers with an interface to the control and monitoring points specified in Section 230993. These specified points shall be the minimum acceptable interface to the boiler. The connection to these points shall be by one of the following methods: (a) Hardwired connection such as relay, 0-10VDC, or 4-20mA. (b) BACnet/IP network connection. (c) BACnet over ARCNET network connection. (d) BACnet MS/TP network connection.

D. Section 23 - Refrigeration equipment:

1. Chiller controls: The chiller vendor shall furnish chillers with an interface to the control and monitoring points specified in Section 230993. These specified points shall be the minimum acceptable interface to the chiller. The connection to these points shall be by one of the following methods:(a) Hardwired connection such as relay, 0-10VDC, or 4-20mA. (b) BACnet/IP network connection. (c) BACnet over ARCNET network connection. (d) BACnet MS/TP network connection. (e) Lon Communication Card

E. Section 23 – Enclosed Controllers:

1. Variable frequency drives: The variable frequency drive (VFD) vendor shall furnish VFDs with an interface to the control and monitoring points specified in this section, Appendix A. These specified points shall be the minimum acceptable interface to the

VFD. The connection to these points shall be by one of the following methods: (a) Hardwired connection such as relay, 0-10VDC, or 4-20mA. (b) BACnet/IP network connection. (c) BACnet over ARCNET network connection. (d) BACnet MS/TP network connection.

F. Communications with Third Party Equipment:

1. Any additional integral control systems included with the products integrated with the work of this section shall be furnished with a BACnet interface for integration into the Direct Digital Control System described in this section.

1.8 APPROVED CONTROL SYSTEMS

A. The following are the **ONLY** approved control system suppliers, manufacturers, and product lines:

Manufacturer
Automated Logic Corporation

B. The specification as provided is written around Automated Logic.

C. Control systems shall comply with the terms of this specification.

1. The Contractor shall use only operator workstation software, controller software, custom application programming language, and controllers from the corresponding manufacturer and product line unless Owner approves use of multiple manufacturers.

1.9 QUALITY ASSURANCE

A. Installer and Manufacturer Qualifications

1. Installer shall have an established working relationship with Control System Manufacturer.

2. Installer shall have successfully completed Control System Manufacturer's control system training. Upon request, Installer shall present record of completed training including course outlines.

1.10 CODES AND STANDARDS

A. Work, materials, and equipment shall comply with the most restrictive of local, state, and federal authorities' codes and ordinances or these plans and specifications. As a minimum, the installation shall comply with current editions in effect 30 days prior to receipt of bids of the following codes:

1. National Electric Code (NEC)

2. International Building Code (IBC)

   a. Section 719 Ducts and Air Transfer Openings
   b. Section 907 Fire Alarm and Detection Systems
   c. Section 909 Smoke Control Systems
   d. Chapter 28 Mechanical

3. International Mechanical Code (IMC)
4. ANSI/ASHRAE 135-2004: Data Communication Protocol for Building Automation and Control Systems (BACNET)

1.11 SYSTEM PERFORMANCE

A. Performance Standards. System shall conform to the following minimum standards over network connections. Systems shall be tested using manufacturer's recommended hardware and software for operator workstation (server and browser for web-based systems).

1. Graphic Display. A graphic with 20 dynamic points shall display with current data within 10 sec.
2. Graphic Refresh. A graphic with 20 dynamic points shall update with current data within 8 sec. and shall automatically refresh every 15 sec.
3. Configuration and Tuning Screens. Screens used for configuring, calibrating, or tuning points, PID loops, and similar control logic shall automatically refresh within 6 sec.
4. Object Command. Devices shall react to command of a binary object within 2 sec. Devices shall begin reacting to command of an analog object within 2 sec.
5. Alarm Response Time. An object that goes into alarm shall be annunciated at the workstation within 15 sec.
6. Program Execution Frequency. Custom and standard applications shall be capable of running as often as once every 5 sec. Select execution times consistent with the mechanical process under control.
7. Performance. Programmable controllers shall be able to completely execute DDC PID control loops at a frequency adjustable down to once per sec. Select execution times consistent with the mechanical process under control.
8. Multiple Alarm Annunciation. Each workstation on the network shall receive alarms within 5 sec of other workstations.
9. Reporting Accuracy. System shall report values with minimum end-to-end accuracy listed in Table 1.
10. Control Stability and Accuracy. Control loops shall maintain measured variable at setpoint within tolerances listed in Table 2.

Table 1
Reporting Accuracy

Measured Variable	**Reported Accuracy**
Space Temperature	±0.5°C (±1°F)
Ducted Air	±0.5°C (±1°F)
Outside Air	±1.0°C (±2°F)
Dew Point	±1.5°C (±3°F)
Water Temperature	±0.5°C (±1°F)
Delta-T	±0.15°C (±0.25°F)

Table 1
Reporting Accuracy

Measured Variable	Reported Accuracy
Relative Humidity	±5% RH
Water Flow	±2% of full scale
Airflow (terminal)	±10% of full scale (see Note 1)
Airflow (measuring stations)	±5% of full scale
Airflow (pressurized spaces)	±3% of full scale
Air Pressure (ducts)	±25 Pa (±0.1 in. w.g.)
Air Pressure (space)	±3 Pa (±0.01 in. w.g.)
Water Pressure	±2% of full scale (see Note 2)
Electrical (A, V, W, Power Factor)	±1% of reading (see Note 3)
Carbon Monoxide (CO)	±5% of reading
Carbon Dioxide (CO_2)	±50 ppm

Note 1: Accuracy applies to 10% - 100% of scale
Note 2: For both absolute and differential pressure
Note 3: Not including utility-supplied meters

Table 2
Control Stability and Accuracy

Controlled Variable	Control Accuracy	Range of Medium
Air Pressure	±50 Pa (±0.2 in. w.g.) ±3 Pa (±0.01 in. w.g.)	0-1.5 kPa (0-6 in. w.g.) -25 to 25 Pa (-0.1 to 0.1 in. w.g.)
Airflow	±10% of full scale	
Space Temperature	±1.0°C (±2.0°F)	
Duct Temperature	±1.5°C (±3°F)	
Humidity	±5% RH	
Fluid Pressure	±10 kPa (±1.5 psi) ±250 Pa (±1.0 in. w.g.)	MPa (1-150 psi) 0-12.5 kPa (0-50 in. w.g.) differential

1.12 SUBMITTALS

A. Product Submittal Requirements: Meet requirements of Section 01600 on Shop Drawings, Product Data, and Samples. Provide six copies of shop drawings and other submittals on hardware, software, and equipment to be installed or furnished. Begin no work until submittals have been approved for conformity with design intent. Provide drawings as AutoCAD 2006 (or newer) compatible files on magnetic or optical disk (file format: .DWG, .DXF, .VSD, or comparable) and 3 prints of each drawing on 11" x 17" paper. When manufacturer's cutsheets apply to a product series rather than a specific product, clearly indicate applicable data by highlighting or by other means. Clearly reference covered specification and drawing on each submittal. General catalogs shall not be accepted as cutsheets to fulfill submittal requirements. Select and show submittal quantities appropriate to scope of work. Submittal approval does not relieve Contractor of responsibility to supply sufficient quantities to complete work. Provide submittals within 12 weeks of contract award on the following:

1. Direct Digital Control System Hardware

a. Complete bill of materials indicating quantity, manufacturer, model number, and relevant technical data of equipment to be used.
b. Manufacturer's description and technical data such as performance curves, product specifications, and installation and maintenance instructions for items listed below and for relevant items not listed below:

1) Direct digital controllers (controller panels)
2) Transducers and transmitters
3) Sensors (include accuracy data)
4) Actuators
5) Valves
6) Relays and switches
7) Control panels
8) Power supplies
9) Batteries
10) Operator interface equipment
11) Wiring

2. Wiring diagrams and layouts for each control panel. Show termination numbers.

a. Floor plan schematic diagrams indicating field sensor and controller locations.
b. Riser diagrams showing control network layout, communication protocol, and wire types.

3. Central System Hardware and Software

a. Complete bill of material indicating quantity, manufacturer, model number, and relevant technical data of equipment used.
b. Manufacturer's description and technical data such as product specifications and installation and maintenance instructions for items listed below and for relevant items furnished under this contract not listed below:

1) Central Processing Unit (CPU) or web server
2) Monitors
3) Keyboards
4) Power supplies
5) Battery backups
6) Interface equipment between CPU or server and control panels
7) Operating System software
8) Operator interface software
9) Color graphic software
10) Third-party software

c. Schematic diagrams of control, communication, and power wiring for central system installation. Show interface wiring to control system.
d. Network riser diagrams of wiring between central control unit and control panels.

4. Controlled Systems

a. Riser diagrams showing control network layout, communication protocol, and wire types.

b. Schematic diagram of each controlled system. Label control points with point names. Graphically show locations of control elements.
c. Schematic wiring diagram of each controlled system. Label control elements and terminals. Where a control element is also shown on control system schematic, use the same name.
d. Instrumentation list (Bill of Materials) for each controlled system. List each control system element in a table. Show element name, type of device, manufacturer, model number, and product data sheet number.
e. Complete description of control system operation including sequences of operation. Include and reference schematic diagram of controlled system. List I/O points and software points specified in Section 230993. Indicate alarmed and trended points.

5. Description of process, report formats, and checklists to be used in Article 3.16 (Control System Demonstration and Acceptance).
6. BACnet Protocol Implementation Conformance Statement (PICS) for each submitted type of controller and operator interface.

B. Schedules

1. Schedule of work provided within one month of contract award, indicating:

a. Intended sequence of work items
b. Start date of each work item
c. Duration of each work item
d. Planned delivery dates for ordered material and equipment and expected lead times
e. Milestones indicating possible restraints on work by other trades or situations

2. Monthly written status reports indicating work completed and revisions to expected delivery dates. Include updated schedule of work.

C. Project Record Documents. Submit three copies of record (as-built) documents upon completion of installation for approval prior to final completion. Submittal shall consist of:

1. Project Record Drawings. As-built versions of submittal shop drawings provided as AutoCAD 2006 (or newer) compatible files on magnetic or optical disk (file format: .DWG, .DXF, .VSD, or comparable) and 6 prints of each drawing on 11" x 17" paper.
2. Testing and Commissioning Reports and Checklists. Completed versions of reports, checklists, and trend logs used to meet requirements of Article 3.16 (Control System Demonstration and Acceptance).
3. Operation and Maintenance (O&M) Manual. Printed, electronic, or online help documentation of the following:

a. As-built versions of submittal product data.
b. Names, addresses, and telephone numbers of installing contractors and service representatives for equipment and control systems.
c. Operator's manual with procedures for operating control systems: logging on and off, handling alarms, producing point reports, trending data, overriding computer control, and changing setpoints and variables.
d. Programming manual or set of manuals with description of programming language and syntax, of statements for algorithms and calculations used, of point database creation and modification, of program creation and modification, and of editor use.

e. Engineering, installation, and maintenance manual or set of manuals that explains how to design and install new points, panels, and other hardware; how to perform preventive maintenance and calibration; how to debug hardware problems; and how to repair or replace hardware.
f. Documentation of programs created using custom programming language including setpoints, tuning parameters, and object database. Electronic copies of programs shall meet this requirement if control logic, setpoints, tuning parameters, and objects can be viewed using furnished programming tools.
g. Graphic files, programs, and database on magnetic or optical media.
h. List of recommended spare parts with part numbers and suppliers.
i. Complete original-issue documentation, installation, and maintenance information for furnished third-party hardware including computer equipment and sensors.
j. Complete original-issue copies of furnished software, including operating systems, custom programming language, operator workstation or web server software, and graphics software.
k. Licenses, guarantees, and warranty documents for equipment and systems.
l. Recommended preventive maintenance procedures for system components, including schedule of tasks such as inspection, cleaning, and calibration; time between tasks; and task descriptions.

D. Training Materials: Provide course outline and materials for each class at least six weeks before first class. Training shall be furnished via instructor-led sessions, computer-based training, or web-based training. Engineer will modify course outlines and materials if necessary to meet Owner's needs. Engineer will review and approve course outlines and materials at least three weeks before first class.

1.13 WARRANTY

A. Warrant work as follows:

1. Warrant labor and materials for specified control system free from defects for a period of 24 months after final acceptance. Control system failures during warranty period shall be adjusted, repaired, or replaced at no additional cost or reduction in service to Owner. Respond during normal business hours within 24 hours of Owner's warranty service request.
2. Work shall have a single warranty date, even if Owner receives beneficial use due to early system start-up. If specified work is split into multiple contracts or a multi-phase contract, each contract or phase shall have a separate warranty start date and period.
3. If Engineer determines that equipment and systems operate satisfactorily at the end of final start-up, testing, and commissioning phase, Engineer will certify in writing that control system operation has been tested and accepted in accordance with the terms of this specification. Date of acceptance shall begin warranty period.
4. Provide updates to operator workstation or web server software, project-specific software, graphic software, database software, and firmware that resolve Contractor-identified software deficiencies at no charge during warranty period. If available, Owner can purchase in-warranty service agreement to receive upgrades for functional enhancements associated with above-mentioned items. Do not install updates or upgrades without Owner's written authorization.
5. Exception: Contractor shall not be required to warrant reused devices except those that have been rebuilt or repaired. Installation labor and materials shall be warranted. Demonstrate operable condition of reused devices at time of Engineer's acceptance.

1.14 OWNERSHIP OF PROPRIETARY MATERIAL

A. Project-specific software and documentation shall become Owner's property. This includes, but is not limited to:

1. Graphics
2. Record drawings
3. Database
4. Application programming code
5. Documentation

PART 2 - PRODUCTS

2.1 MATERIALS

A. Use new products the manufacturer is currently manufacturing and selling for use in new installations. Do not use this installation as a product test site unless explicitly approved in writing by Owner. Spare parts shall be available for at least five years after completion of this contract.

2.2 COMMUNICATION

A. Control products, communication media, connectors, repeaters, hubs, and routers shall comprise a BACnet internetwork. Controller and operator interface communication shall conform to ANSI/ASHRAE Standard 135-2004, BACnet.

B. Install new wiring and network devices as required to provide a complete and workable control network. Use existing Ethernet backbone for network segments marked "existing" on project drawings.

C. Each controller shall have a communication port for temporary connection to a laptop computer or other operator interface. Connection shall support memory downloads and other commissioning and troubleshooting operations.

D. Internetwork operator interface and value passing shall be transparent to internetwork architecture.

1. An operator interface connected to a controller shall allow the operator to interface with each internetwork controller as if directly connected. Controller information such as data, status, and control algorithms shall be viewable and editable from each internetwork controller.
2. Inputs, outputs, and control variables used to integrate control strategies across multiple controllers shall be readable by each controller on the internetwork. Program and test all cross-controller links required to execute control strategies specified in Section 230993. An authorized operator shall be able to edit cross-controller links by typing a standard object address or by using a point-and-click interface.

E. Controllers with real-time clocks shall use the BACnet Time Synchronization service. System shall automatically synchronize system clocks daily from an operator-designated controller via

the internetwork. If applicable, system shall automatically adjust for daylight saving and standard time.

F. System shall be expandable to at least twice the required input and output objects with additional controllers, associated devices, and wiring.

G. System shall support Web services data exchange with any other system that complies with XML (extensible markup language) and SOAP (simple object access protocol) standards specified by the Web Services Interoperability Organization (WS-I) Basic Profile 1.0 or higher. Web services support shall as a minimum be provided at the workstation or web server level and shall enable data to be read from or written to the system.

1. System shall support Web services read data requests by retrieving requested trend data or point values (I/O hardware points, analog value software points, or binary value software points) from any system controller or from the trend history database.
2. System shall support Web services write data request to each analog and binary object that can be edited through the system operator interface by downloading a numeric value to the specified object.
3. For read or write requests, the system shall require user name and password authentication and shall support SSL (Secure Socket Layer) or equivalent data encryption.
4. System shall support discovery through a Web services connection or shall provide a tool available through the Operator Interface that will reveal the path/identifier needed to allow a third party Web services device to read data from or write data to any object in the system which supports this service.

2.3 OPERATOR INTERFACE AND COMMUNICATIONS

A. The ATC operator interface software must operate and work be fully operated, integrated and fully accessible via the internet at the RVTS in Middletown, CT. Access and operation of the ATC must be seamless.

B. Communication. Web server or workstation and controllers shall communicate using BACnet protocol. Web server or workstation and control network backbone shall communicate using ISO 8802-3 (Ethernet) Data Link/Physical layer protocol and BACnet/IP addressing as specified in ANSI/ASHRAE 135-2004, BACnet Annex J.

C. New BACnet router control units shall be installed in the School and communicate with the operator work station in the Board of Education Facility via Ethernet Network.

D. All digital controllers in the school shall be networked to the BACnet router control units through hardwired communications cable. Web based dynamic color graphics of all systems shall be provided at the operator station. Graphics shall include real point display and direct software communication for setpoint and program override. In addition a building graphic shall be provided with cursor blocks for access to respective systems.

E. Hardware. Each web based workstation shall consist of the following (Note this operator work station shall reside at the Board of Education and shall be provided under a separate contract):

1. Hardware Base. Industry-standard hardware shall meet or exceed DDC system manufacturer's recommended specifications and shall meet response times specified in

1.9. Hard disk shall have sufficient memory to store system software, one year of data for trended points specified in Appendix A, and a system database at least twice the size of the existing database at system acceptance. Configure computers and network connections if multiple computers are required to meet specified memory and performance. Web server or workstations shall be IBM-compatible PCs with a minimum of:

a. Intel Pentium 2.66 GHz processor
b. 2 GB RAM
c. 160 GB hard disk providing data at 100 MB/sec
d. 48x CD-ROM drive
e. Serial, parallel, and network communication ports and cables required for proper system operation

2. Laptop Computer: (Provide 1 Lab Top)
   a. Manufactures: Dell, HP or Toshiba
   b. 2.13 GHZ processor
   c. 1 GB Ram
   d. 120 GB Hard Drive
   e. 24 X CD Burner/ DVD Combo Drive
   f. Windows XP

F. Operator Functions. Operator interface shall allow each authorized operator to execute the following functions as a minimum:

1. Log In and Log Out. System shall require user name and password to log in to operator interface.
2. Point-and-click Navigation. Operator interface shall be graphically based and shall allow operators to access graphics for equipment and geographic areas using point-and-click navigation.
3. View and Adjust Equipment Properties. Operators shall be able to view controlled equipment status and to adjust operating parameters such as setpoints, PID gains, on and off controls, and sensor calibration.
4. View and Adjust Operating Schedules. Operators shall be able to view scheduled operating hours of each schedulable piece of equipment on a weekly or monthly calendar-based graphical schedule display, to select and adjust each schedule and time period, and to simultaneously schedule related equipment. System shall clearly show exception schedules and holidays on the schedule display.
5. View and Respond to Alarms. Operators shall be able to view a list of currently active system alarms, to acknowledge each alarm, and to clear (delete) unneeded alarms.
6. View and Configure Trends. Operators shall be able to view a trend graph of each trended point and to edit graph configuration to display a specific time period or data range. Operator shall be able to create custom trend graphs to display on the same page data from multiple trended points.
7. View and Configure Reports. Operators shall be able to run preconfigured reports, to view report results, and to customize report configuration to show data of interest.
8. Manage Control System Hardware. Operators shall be able to view controller status, to restart (reboot) each controller, and to download new control software to each controller.
9. Manage Operator Access. Typically, only a few operators are authorized to manage operator access. Authorized operators shall be able to view a list of operators with system access and of functions they can perform while logged in. Operators shall be able to add

operators, to delete operators, and to edit operator function authorization. Operator shall be able to authorize each operator function separately.

G. System Software.

1. Operating System. Web server shall have an industry-standard professional-grade operating system. Acceptable systems include Microsoft Windows XP Pro, Red Hat Linux, or Sun Solaris.
2. System Graphics. Operator interface shall be graphically based and shall include at least one graphic per piece of equipment or occupied zone, graphics for each chilled water and hot water system, and graphics that summarize conditions on each floor of each building included in this contract. Indicate thermal comfort on floor plan summary graphics using dynamic colors to represent zone temperature relative to zone setpoint.

    a. Functionality. Graphics shall allow operator to monitor system status, to view a summary of the most important data for each controlled zone or piece of equipment, to use point-and-click navigation between zones or equipment, and to edit setpoints and other specified parameters.
    b. Animation. Graphics shall be able to animate by displaying different image files for changed object status.
    c. Alarm Indication. Indicate areas or equipment in an alarm condition using color or other visual indicator.
    d. Format. Graphics shall be saved in an industry-standard format such as BMP, JPEG, PNG, or GIF. Web-based system graphics shall be viewable on browsers compatible with World Wide Web Consortium browser standards. Web graphic format shall require no plug-in (such as HTML and JavaScript) or shall only require widely available no-cost plug-ins (such as Active-X and Macromedia Flash).

H. System Tools. System shall provide the following functionality to authorized operators as an integral part of the operator interface or as stand-alone software programs. If furnished as part of the interface, the tool shall be available from each workstation or web browser interface. If furnished as a stand-alone program, software shall be installable on standard IBM-compatible PCs with no limit on the number of copies that can be installed under the system license.

1. Automatic System Database Configuration. Each workstation or web server shall store on its hard disk a copy of the current system database, including controller firmware and software. Stored database shall be automatically updated with each system configuration or controller firmware or software change.
2. Controller Memory Download. Operators shall be able to download memory from the system database to each controller.
3. System Configuration. Operators shall be able to configure the system.
4. Online Help. Context-sensitive online help for each tool shall assist operators in operating and editing the system.
5. Security. System shall require a user name and password to view, edit, add, or delete data.

    a. Operator Access. Each user name and password combination shall define accessible viewing, editing, adding, and deleting functions in each system application, editor, and object. Authorized operators shall be able to vary and deny each operator's accessible functions based on equipment or geographic location.

b. Automatic Log Out. Automatically log out each operator if no keyboard or mouse activity is detected. Operators shall be able to adjust automatic log out delay.
c. Encrypted Security Data. Store system security data including operator passwords in an encrypted format. System shall not display operator passwords.

6. System Diagnostics. System shall automatically monitor controller and I/O point operation. System shall annunciate controller failure and I/O point locking (manual overriding to a fixed value).
7. Alarm Processing. System input and status objects shall be configurable to alarm on departing from and on returning to normal state. Operator shall be able to enable or disable each alarm and to configure alarm limits, alarm limit differentials, alarm states, and alarm reactions for each system object. Configure and enable alarm points as specified in Sequences of Operations. Alarms shall be BACnet alarm objects and shall use BACnet alarm services.
8. Alarm Messages. Alarm messages shall use an English language descriptor without acronyms or mnemonics to describe alarm source, location, and nature.
9. Alarm Reactions. Operator shall be able to configure (by object) actions workstation or web server shall initiate on receipt of each alarm. As a minimum, workstation or web server shall log, print, start programs, display messages, send e-mail, send page, and audibly annunciate. All are configurable and user selectable through central BMS station.
10. Alarm Maintenance. Operators shall be able to view system alarms and changes of state chronologically, to acknowledge and delete alarms, and to archive closed alarms to the workstation or web server hard disk from each workstation or web browser interface.
11. Trend Configuration. Operator shall be able to configure trend sample or change of value (COV) interval, start time, and stop time for each system data object and shall be able to retrieve data for use in spreadsheets and standard database programs. Controller shall sample and store trend data and shall be able to archive data to the hard disk. Configure trends as specified in Sequences of Operation. Trends shall be BACnet trend objects.
12. Object and Property Status and Control. Operator shall be able to view, and to edit if applicable, the status of each system object and property by menu, on graphics, or through custom programs.
13. Reports and Logs. Operator shall be able to select, to modify, to create, and to print reports and logs. Operator shall be able to store report data in a format accessible by standard spreadsheet and word processing programs.
14. Standard Reports. Furnish the following standard system reports:

    a. Objects. System objects and current values filtered by object type, by status (in alarm, locked, normal), by equipment, by geographic location, or by combination of filter criteria.
    b. Alarm Summary. Current alarms and closed alarms. System shall retain closed alarms for an adjustable period.
    c. Logs. System shall log the following to a database or text file and shall retain data for an adjustable period:

        1) Alarm History.
        2) Trend Data. Operator shall be able to select trends to be logged.
        3) Operator Activity. At a minimum, system shall log operator log in and log out, control parameter changes, schedule changes, and alarm acknowledgment and deletion. System shall date and time stamp logged activity.

15. Graphics Generation. Graphically based tools and documentation shall allow Operator to edit system graphics, to create graphics, and to integrate graphics into the system. Operator shall be able to add analog and binary values, dynamic text, static text, and animation files to a background graphic using a mouse.
16. Graphics Library. Complete library of standard HVAC equipment graphics shall include equipment such as chillers, boilers, air handlers, terminals, fan coils, and unit ventilators. Library shall include standard symbols for other equipment including fans, pumps, coils, valves, piping, dampers, and ductwork. Library graphic file format shall be compatible with graphics generation tools.
17. Custom Application Programming. Operator shall be able to create, edit, debug, and download custom programs. System shall be fully operable while custom programs are edited, compiled, and downloaded. Programming language shall have the following features:

    a. Language. Language shall be graphically based and shall use function blocks arranged in a logic diagram that clearly shows control logic flow. Function blocks shall directly provide functions listed below, and operators shall be able to create custom or compound function blocks.
    b. Programming Environment. Tool shall provide a full-screen, cursor-and-mouse-driven programming environment that incorporates word processing features such as cut and paste. Operators shall be able to insert, add, modify, and delete custom programming code, and to copy blocks of code to a file library for reuse in other control programs.
    c. Independent Program Modules. Operator shall be able to develop independently executing program modules that can disable, enable and exchange data with other program modules.
    d. Debugging and Simulation. Operator shall be able to step through the program observing intermediate values and results. Operator shall be able to adjust input variables to simulate actual operating conditions. Operator shall be able to adjust each step's time increment to observe operation of delays, integrators, and other time-sensitive control logic. Debugger shall provide error messages for syntax and for execution errors.
    e. Conditional Statements. Operator shall be able to program conditional logic using compound Boolean (AND, OR, and NOT) and relational (EQUAL, LESS THAN, GREATER THAN, NOT EQUAL) comparisons.
    f. Mathematical Functions. Language shall support floating-point addition, subtraction, multiplication, division, and square root operations, as well as absolute value calculation and programmatic selection of minimum and maximum values from a list of values.
    g. Variables: Operator shall be able to use variable values in program conditional statements and mathematical functions.

        1) Time Variables. Operator shall be able to use predefined variables to represent time of day, day of the week, month of the year, and date. Other predefined variables or simple control logic shall provide elapsed time in seconds, minutes, hours, and days. Operator shall be able to start, stop, and reset elapsed time variables using the program language.
        2) System Variables. Operator shall be able to use predefined variables to represent status and results of Controller Software and shall be able to enable, disable, and change setpoints of Controller Software as described in Controller Software section.

I. Portable Operator's Terminal. Provide all necessary software to configure an IBM-compatible laptop computer for use as a Portable Operator's Terminal. Operator shall be able to connect configured Terminal to the system network or directly to each controller for programming, setting up, and troubleshooting.

J. BACnet. Web server or workstation shall have demonstrated interoperability during at least one BMA Interoperability Workshop and shall substantially conform to BACnet Operator Workstation (B-OWS) device profile as specified in ASHRAE/ANSI 135-2001, BACnet Annex L.

2.4 CONTROLLER SOFTWARE

A. Building and energy management application software shall reside and operate in system controllers. Applications shall be editable through operator workstation, web browser interface, or engineering workstation.

B. System Security. See Paragraph 2.3.F.5 (Security) and Paragraph 2.3.F.15.c (Operator Activity).

C. Scheduling. See Paragraph 2.3.D.4 (View and Adjust Operating Schedules). System shall provide the following schedule options as a minimum:

1. Weekly. Provide separate schedules for each day of the week. Each schedule shall be able to include up to 5 occupied periods (5 start-stop pairs or 10 events).
2. Exception. Operator shall be able to designate an exception schedule for each of the next 365 days. After an exception schedule has executed, system shall discard and replace exception schedule with standard schedule for that day of the week.
3. Holiday. Operator shall be able to define 24 special or holiday schedules of varying length on a scheduling calendar that repeats each year.

D. System Coordination. Operator shall be able to group related equipment based on function and location and to use these groups for scheduling and other applications.

E. Binary and Analog Alarms. See Paragraph 2.3.F.7 (Alarm Processing).

F. Alarm Reporting. See Paragraph 2.3.F.9 (Alarm Reactions).

G. Remote Communication. System shall automatically contact operator workstation or server on receipt of critical alarms. If no network connection is available, system shall use a modem connection.

H. Duty Cycling:

1. Periodically start and stop loads based on space temperature and according to various On/Off patterns.
2. Modify off portion of cycle based on operator specified comfort parameters. Maintain total cycle time by increasing on portion of cycle by same amount that off portion is reduced.
3. Set and modify the following parameters for each individual load:

a. Minimum and maximum Off time

b. On/Off time in one minute increment.

c. Time period from beginning of interval until load can be cycled.

d. Manually override the DDC program and place a load in an On or Off state.

e. Cooling Target temperature and differential.

f. Heating Target temperature and differential.

g. Cycle off adjustment.

I. Maintenance Management. System shall generate maintenance alarms when equipment exceeds adjustable runtime, equipment starts, or performance limits. Configure and enable maintenance alarms as specified in Section 230993 (Sequences of Operation).

J. Sequencing. Application software shall sequence chillers, boilers, and pumps as specified in Section 230993 (Sequences of Operation).

K. PID Control. System shall provide direct- and reverse-acting PID (proportional-integral-derivative) algorithms. Each algorithm shall have anti-windup and selectable controlled variable, setpoint, and PID gains. Each algorithm shall calculate a time-varying analog value that can be used to position an output or to stage a series of outputs.

L. Staggered Start. System shall stagger controlled equipment restart after power outage. Operator shall be able to adjust equipment restart order and time delay between equipment restarts.

M. Energy Calculations.

1. System shall accumulate and convert instantaneous power (kW) or flow rates (L/s [gpm]) to energy usage data.
2. System shall calculate a sliding-window average (rolling average). Operator shall be able to adjust window interval to 15 minutes, 30 minutes, or 60 minutes.

N. Anti-Short Cycling. Binary output objects shall be protected from short cycling by means of adjustable minimum on-time and off-time settings.

O. On and Off Control with Differential. System shall provide direct- and reverse-acting on and off algorithms with adjustable differential to cycle a binary output based on a controlled variable and setpoint.

P. Runtime Totalization. System shall provide an algorithm that can totalize runtime for each binary input and output. Operator shall be able to enable runtime alarm based on exceeded adjustable runtime limit. Configure and enable runtime totalization and alarms as specified in Sequence of Operations.

2.5 CONTROLLERS

A. General. Provide Building Controllers (BC), Advanced Application Controllers (AAC), Application Specific Controllers (ASC), Smart Actuators (SA), and Smart Sensors (SS) as required to achieve performance specified in Article 1.9 (System Performance). Every device in

the system which executes control logic and directly controls HVAC equipment must conform to a standard BACnet Device profile as specified in ANSI/ASHRAE 135-2004, BACnet Annex L. Unless otherwise specified, hardwired actuators and sensors may be used in lieu of BACnet Smart Actuators and Smart Sensors.

B. BACnet.

1. Building Controllers (BCs). Each BC shall conform to BACnet Building Controller (B-BC) device profile as specified in ANSI/ASHRAE 135-2004, BACnet Annex L and shall be listed as a certified B-BC in the BACnet Testing Laboratories (BTL) Product Listing.
2. Advanced Application Controllers (AACs). Each AAC shall conform to BACnet Advanced Application Controller (B-AAC) device profile as specified in ANSI/ASHRAE 135-2004, BACnet Annex L and shall be listed as a certified B-AAC in the BACnet Testing Laboratories (BTL) Product Listing.
3. Application Specific Controllers (ASCs). Each ASC shall conform to BACnet Application Specific Controller (B-ASC) device profile as specified in ANSI/ASHRAE 135-2004, BACnet Annex L and shall be listed as a certified B-ASC in the BACnet Testing Laboratories (BTL) Product Listing.
4. BACnet Communication.

    a. Each BC shall reside on or be connected to a BACnet network using ISO 8802-3 (Ethernet) Data Link/Physical layer protocol and BACnet/IP addressing.
    b. BACnet routing shall be performed by BCs or other BACnet device routers as necessary to connect BCs to networks of AACs and ASCs.
    c. Each AAC shall reside on a BACnet network using ISO 8802-3 (Ethernet) Data Link/Physical layer protocol with BACnet/IP addressing, or it shall reside on a BACnet network using the ARCNET or MS/TP Data Link/Physical layer protocol.
    d. Each ASC shall reside on a BACnet network using the ARCNET or MS/TP Data Link/Physical layer protocol.
    e. Each SA shall reside on a BACnet network using the ARCNET or MS/TP Data Link/Physical layer protocol.
    f. Each SS shall reside on a BACnet network using ISO 8802-3 (Ethernet) Data Link/Physical layer protocol with BACnet/IP addressing, or it shall reside on a BACnet network using ARCNET or MS/TP Data Link/Physical layer protocol.

C. Communication.

1. Service Port. Each controller shall provide a service communication port for connection to a Portable Operator's Terminal. Connection shall be extended to space temperature sensor ports where shown on drawings.
2. Signal Management. BC and ASC operating systems shall manage input and output communication signals to allow distributed controllers to share real and virtual object information and to allow for central monitoring and alarms.
3. Data Sharing. Each BC and AAC shall share data as required with each networked BC and AAC.
4. Stand-Alone Operation. Each piece of equipment specified in Section 230993 shall be controlled by a single controller to provide stand-alone control in the event of communication failure. All I/O points specified for a piece of equipment shall be integral to its controller. Provide stable and reliable stand-alone control using default values or other method for values normally read over the network.

D. Environment. Controller hardware shall be suitable for anticipated ambient conditions.

1. Controllers used outdoors or in wet ambient conditions shall be mounted in waterproof enclosures and shall be rated for operation at -29°C to 60°C (-20°F to 140°F).
2. Controllers used in conditioned space shall be mounted in dust-protective enclosures and shall be rated for operation at 0°C to 50°C (32°F to 120°F).

E. Real-Time Clock. Controllers that perform scheduling shall have a real-time clock.

F. Serviceability.

1. Controllers shall have diagnostic LEDs for power, communication, and processor.
2. Wires shall be connected to a field-removable modular terminal strip or to a termination card connected by a ribbon cable.
3. Each BC and AAC shall continually check its processor and memory circuit status and shall generate an alarm on abnormal operation. System shall continuously check controller network and generate alarm for each controller that fails to respond.

G. Memory.

1. Controller memory shall support operating system, database, and programming requirements.
2. Each BC and AAC shall retain BIOS and application programming for at least 72 hours in the event of power loss.
3. Each ASC and SA shall use nonvolatile memory and shall retain BIOS and application programming in the event of power loss. System shall automatically download dynamic control parameters following power loss.

H. Immunity to Power and Noise. Controllers shall be able to operate at 90% to 110% of nominal voltage rating and shall perform an orderly shutdown below 80% nominal voltage. Operation shall be protected against electrical noise of 5 to 120 Hz and from keyed radios up to 5 W at 1 m (3 ft).

I. Transformer. ASC power supply shall be fused or current limiting and shall be rated at a minimum of 125% of ASC power consumption.

2.6 INPUT AND OUTPUT INTERFACE

A. General. Hard-wire input and output points to BCs, AACs, ASCs, or SAs.

B. Protection. Shorting an input or output point to itself, to another point, or to ground shall cause no controller damage. Input or output point contact with up to 24 V for any duration shall cause no controller damage.

C. Binary Inputs. Binary inputs shall monitor the on and off signal from a remote device. Binary inputs shall provide a wetting current of at least 12 mA and shall be protected against contact bounce and noise. Binary inputs shall sense dry contact closure without application of power external to the controller.

D. Pulse Accumulation Inputs. Pulse accumulation inputs shall conform to binary input requirements and shall accumulate up to 10 pulses per second.

E. Analog Inputs. Analog inputs shall monitor low-voltage (0-10 Vdc), current (4-20 mA), or resistance (thermistor or RTD) signals. Analog inputs shall be compatible with and field configurable to commonly available sensing devices.

F. Binary Outputs. Binary outputs shall send an on-or-off signal for on and off control. Building Controller binary outputs shall have three-position (on-off-auto) override switches and status lights. Outputs shall be selectable for normally open or normally closed operation.

G. Analog Outputs. Analog outputs shall send a modulating 0-10 Vdc or 4-20 mA signal as required to properly control output devices. Each Building Controller analog output shall have a two-position (auto-manual) switch, a manually adjustable potentiometer, and status lights. Analog outputs shall not drift more than 0.4% of range annually.

H. Tri-State Outputs. Control three-point floating electronic actuators without feedback with tri-state outputs (two coordinated binary outputs). Tri-State outputs may be used to provide analog output control in zone control and terminal unit control applications such as VAV terminal units, duct-mounted heating coils, and zone dampers.

I. Universal Inputs and Outputs. Inputs and outputs that can be designated as either binary or analog in software shall conform to the provisions of this section that are appropriate for their designated use.

2.7 POWER SUPPLIES AND LINE FILTERING

A. Power Supplies. Control transformers shall be UL listed. Furnish Class 2 current-limiting type or furnish over-current protection in primary and secondary circuits for Class 2 service in accordance with NEC requirements. Limit connected loads to 80% of rated capacity.

1. DC power supply output shall match output current and voltage requirements. Unit shall be full-wave rectifier type with output ripple of 5.0 mV maximum peak-to-peak. Regulation shall be 1.0% line and load combined, with 100-microsecond response time for 50% load changes. Unit shall have built-in over-voltage and over-current protection and shall be able to withstand 150% current overload for at least three seconds without trip-out or failure.

   a. Unit shall operate between 0°C and 50°C (32°F and 120°F). EM/RF shall meet FCC Class B and VDE 0871 for Class B and MILSTD 810C for shock and vibration.
   b. Line voltage units shall be UL recognized and CSA listed.

B. Power Line Filtering.

1. Provide internal or external transient voltage and surge suppression for workstations and controllers. Surge protection shall have:

   a. Dielectric strength of 1000 V minimum
   b. Response time of 10 nanoseconds or less
   c. Transverse mode noise attenuation of 65 dB or greater
   d. Common mode noise attenuation of 150 dB or greater at 40-100 Hz

2.8 AUXILIARY CONTROL DEVICES

A. Motorized Control Dampers.

1. Type. Control dampers shall have linear flow characteristics and shall be parallel- or opposed-blade type as specified below or as scheduled on drawings.

   a. Outdoor and return air mixing dampers and face-and-bypass dampers shall be parallel-blade and shall direct airstreams toward each other.
   b. Other modulating dampers shall be opposed-blade.
   c. Two-position shutoff dampers shall be parallel- or opposed-blade with blade and side seals.

2. Frame. Damper frames shall be 16 gauge galvanized steel channel or (1/8 in. extruded aluminum with reinforced corner bracing.
3. Blades. Damper blades shall not exceed 8 in. in width or 48 in. in length. Blades shall be suitable for medium velocity (10 m/s [2000 fpm]) performance. Blades shall be not less than 16 gauge.
4. Shaft Bearings. Damper shaft bearings shall be oil impregnated sintered bronze.
5. Seals. Blade edges and frame top and bottom shall have replaceable seals of butyl rubber or neoprene. Side seals shall be spring-loaded stainless steel. Blade seals shall leak no more than 10 cfm per ft^2 at 4 in. w.g. differential pressure. Blades shall be airfoil type suitable for wide-open face velocity of 1500 fpm.
6. Sections. Damper sections shall not exceed 48 in. - 60 in.. Each section shall have at least one damper actuator.
7. Linkages and linkage bearings. Dampers shall have exposed linkages. Oil impregnated sintered bronze.

B. Electric Damper and Valve Actuators.

1. Stall Protection. Mechanical or electronic stall protection shall prevent actuator damage throughout the actuator's rotation.
2. Spring-return Mechanism. Actuators used for power-failure and safety applications shall have an internal mechanical spring-return mechanism or an uninterruptible power supply (UPS).
3. Signal and Range. Proportional actuators shall accept a 0-10 Vdc or a 0-20 mA control signal and shall have a 2-10 Vdc or 4-20 mA operating range. (Floating motor actuators may be substituted for proportional actuators in terminal unit applications as described in paragraph 2.6H.) Provide auxiliary end switch for position status as well as full potentiometer for monitoring of damper position over full range of motion for damper position indication and monitoring.
4. Wiring. 24 Vac and 24 Vdc actuators shall operate on Class 2 wiring.
5. Manual Positioning. Operators shall be able to manually position each actuator when the actuator is not powered. Non-spring-return actuators shall have an external manual gear release. Spring-return actuators with more than 60 in.-lb torque capacity shall have a manual crank.

C. Control Valves.

1. Globe Valves NPS 2 and Smaller: Bronze body, bronze trim, rising stem, renewable composition disc, and screwed ends with backseating capacity repackable under pressure.

2. Globe Valves NPS 2-1/2 and Larger: Iron body, bronze trim, rising stem, plug-type disc, flanged ends, and renewable seat and disc.

3. Hydronic system globe valves shall have the following characteristics:

   a. Rating: Class 125 for service at 125 psig and 250 deg F operating conditions.

   b. Internal Construction: Replaceable plugs and seats of stainless steel or brass.

      1) Single-Seated Valves: Cage trim provides seating and guiding surfaces for plug on top and bottom of guided plugs.

      2) Double-Seated Valves: Balanced plug; cage trim provides seating and guiding surfaces for plugs on top and bottom of guided plugs.

   c. Sizing: 3-psig maximum pressure drop at design flow rate.

   d. Flow Characteristics: Two-way valves shall have equal percentage characteristics; three-way valves shall have linear characteristics. Operators shall close valves against pump shutoff head.

4. Butterfly Valves: 200-psig, 150-psig maximum pressure differential, ASTM A 126 cast-iron or ASTM A 536 ductile-iron body and bonnet, extended neck, stainless-steel stem, field-replaceable EPDM or Buna N sleeve and stem seals.

   a. Body Style: Lug.

   b. Disc Type: bronze.

   c. Sizing: 1-psig maximum pressure drop at design flow rate.

5. Terminal Unit Control Valves: Bronze body, bronze trim, two- or three-port as indicated, replaceable plugs and seats, union and threaded ends.

   a. Rating: Class 125 for service at 125 psig and 250 deg F operating conditions.

   b. Sizing: 3-psig maximum pressure drop at design flow rate, to close against pump shutoff head.

   c. Flow Characteristics: Two-way valves shall have equal percentage characteristics; three-way valves shall have linear characteristics.

6. Type. Provide two- or three-way control valves for two-position or modulating service as shown.

7. Water Valves.

   a. Valves providing two-position service shall be quick opening. Two-way valves shall have replaceable disc or ball.

   b. Close-off (Differential) Pressure Rating. Valve actuator and trim shall provide the following minimum close-off pressure ratings.

1) Two-way: 150% of total system (pump) head.
2) Three-way: 300% of pressure differential between ports A and B at design flow or 100% of total system (pump) head.

c. Ports. Valves providing modulating service shall have equal percentage ports.
d. Sizing.

1) Two-position service: line size.
2) Two-way modulating service: select pressure drop equal to the greatest of twice the pressure drop through coil (load), 50% of the pressure difference between supply and return mains, or 35 kPa (5 psi).
3) Three-way modulating service: select pressure drop equal to the smaller of twice the pressure drop through the coil (load) or 35 kPa (5 psi).

e. Fail Position. Water valves shall fail normally open or closed as follows unless otherwise specified.

1) Water zone valves: normally open.
2) Heating coils in air handlers: normally open.
3) Chilled water control valves: normally closed.
4) Other applications: as scheduled or as required by sequences of operation.

D. Binary Temperature Devices.

1. Low-Voltage Space Thermostats. Low-voltage space thermostats shall be 24 V, bimetal-operated, non mercury-switch type, with adjustable or fixed anticipation heater, concealed setpoint adjustment, 13°C-30°C (55°F-85°F) setpoint range, 1°C (2°F) maximum differential, and vented ABS plastic cover.
2. Line-Voltage Space Thermostats. Line-voltage space thermostats shall be bimetal-actuated, open-contact type or bellows-actuated, enclosed, snap-switch type or equivalent solid-state type, with heat anticipator, UL listing for electrical rating, concealed setpoint adjustment, 13°C-30°C (55°F-85°F) setpoint range, 1°C (2°F) maximum differential, and vented ABS plastic cover.
3. Low-Limit Thermostats. Low-limit airstream thermostats shall be UL listed, vapor pressure type. Element shall be at least 6 m (20 ft) long. Element shall sense temperature in each 30 cm (1 ft) section and shall respond to lowest sensed temperature. Low-limit thermostat shall be manual reset only.

E. Temperature Sensors.

1. Type. Temperature sensors shall be Resistance Temperature Device (RTD) or thermistor.

2. Duct Sensors. Duct sensors shall be single point or averaging as shown. Averaging sensors shall be a minimum of 5 ft in length per 10 ft^2 of duct cross-section.

3. Immersion Sensors. Provide immersion sensors with a separable stainless steel well. Well pressure rating shall be consistent with system pressure it will be immersed in. Well shall withstand pipe design flow velocities.

4. Space Sensors. Space sensors shall have setpoint adjustment, override switch, display, and communication port. Provide sensor only in public spaces.

5. Differential Sensors. Provide matched sensors for differential temperature measurement.

F. Humidity Sensors.

1. Duct and room sensors shall have a sensing range of 20%-80%.
2. Duct sensors shall have a sampling chamber.
3. Outdoor air humidity sensors shall have a sensing range of 20%-95% RH and shall be suitable for ambient conditions of 40°C-75°C (40°F-170°F).
4. Humidity sensors shall not drift more than 1% of full scale annually.

G. Flow Switches. Flow-proving switches shall be paddle (water service only) or differential pressure type (air or water service) as shown. Switches shall be UL listed, SPDT snap-acting, and pilot duty rated (125 VA minimum).

1. Paddle switches shall have adjustable sensitivity and NEMA 1 enclosure unless otherwise specified.
2. Differential pressure switches shall have scale range and differential suitable for intended application and NEMA 1 enclosure unless otherwise specified.

H. Relays.

3. Control Relays. Control relays shall be plug-in type, UL listed, and shall have dust cover and LED "energized" indicator. Contact rating, configuration, and coil voltage shall be suitable for application.

4. Time Delay Relays. Time delay relays shall be solid-state plug-in type, UL listed, and shall have adjustable time delay. Delay shall be adjustable ±100% from setpoint shown. Contact rating, configuration, and coil voltage shall be suitable for application. Provide NEMA 1 enclosure for relays not installed in local control panel.

I. Override Timers.

1. Unless implemented in control software, override timers shall be spring-wound line voltage, UL Listed, with contact rating and configuration required by application. Provide 0-6 hour calibrated dial unless otherwise specified. Flush mount timer on local control panel face or where shown.

J. Current Transmitters.

1. AC current transmitters shall be self-powered, combination split-core current transformer type with built-in rectifier and high-gain servo amplifier with 4-20 mA two-wire output. Full-scale unit ranges shall be 10 A, 20 A, 50 A, 100 A, 150 A, and 200 A, with internal zero and span adjustment. Unit accuracy shall be ±1% full-scale at 500 ohm maximum burden.
2. Transmitter shall meet or exceed ANSI/ISA S50.1 requirements and shall be UL/CSA recognized.
3. Unit shall be split-core type for clamp-on installation on existing wiring.

K. Current Transformers.

1. AC current transformers shall be UL/CSA recognized and shall be completely encased (except for terminals) in approved plastic material.
2. Transformers shall be available in various current ratios and shall be selected for ±1% accuracy at 5 A full-scale output.
3. Use fixed-core transformers for new wiring installation and split-core transformers for existing wiring installation.

L. Voltage Transmitters.

1. AC voltage transmitters shall be self-powered single-loop (two-wire) type, 4-20 mA output with zero and span adjustment.
2. Adjustable full-scale unit ranges shall be 100-130 Vac, 200-250 Vac, 250-330 Vac, and 400-600 Vac. Unit accuracy shall be ±1% full-scale at 500 ohm maximum burden.
3. Transmitters shall meet or exceed ANSI/ISA S50.1 requirements and shall be UL/CSA recognized at 600 Vac rating.

M. Voltage Transformers.

1. AC voltage transformers shall be UL/CSA recognized, 600 Vac rated, and shall have built-in fuse protection.
2. Transformers shall be suitable for ambient temperatures of 4°C-55°C (40°F-130°F) and shall provide ±0.5% accuracy at 24 Vac and 5 VA load.
3. Windings (except for terminals) shall be completely enclosed with metal or plastic.

N. Power Monitors.

1. Power monitors shall be three-phase type and shall have three-phase disconnect and shorting switch assembly, UL listed voltage transformers, and UL listed split-core current transformers.
2. Power monitors shall provide selectable output: rate pulse for kWh reading or 4-20 mA for kW reading. Power monitors shall operate with 5 A current inputs and maximum error of ±2% at 1.0 power factor or ±2.5% at 0.5 power factor.

O. Current Switches.

1. Current-operated switches shall be self-powered, solid-state with adjustable trip current. Select switches to match application current and DDC system output requirements.

P. Pressure Transducers.

1. Transducers shall have linear output signal and field-adjustable zero and span.
2. Continuous operating conditions of positive or negative pressure 50% greater than calibrated span shall not damage transducer sensing elements.
3. Water pressure transducer diaphragm shall be stainless steel with minimum proof pressure of 1000 kPa (150 psi). Transducer shall have 4-20 mA output, suitable mounting provisions, and block and bleed valves.
4. Water differential pressure transducer diaphragm shall be stainless steel with minimum proof pressure of 1000 kPa (150 psi). Over-range limit (differential pressure) and maximum static pressure shall be 2000 kPa (300 psi.) Transducer shall have 4-20 mA output, suitable mounting provisions, and 5-valve manifold.

Q. Differential Pressure Switches. Differential pressure switches (air or water service) shall be UL listed, SPDT snap-acting, pilot duty rated (125 VA minimum) and shall have scale range and differential suitable for intended application and NEMA 1 enclosure unless otherwise specified.

R. Pressure-Electric (PE) Switches. PE switches shall be UL listed, pilot duty rated (125 VA minimum) or motor control rated, metal or neoprene diaphragm actuated, operating pressure rated for 0-175 kPa (0-25 psig), with calibrated scale minimum setpoint range of 14-125 kPa (2-18 psig).

1. Provide one- or two-stage switch action (SPDT, DPST, or DPDT) as required by application.
2. Switches shall be open type (panel-mounted). Exception: Switches shall be enclosed type for remote installation. Enclosed type shall be NEMA 1 unless otherwise specified.
3. Each pneumatic signal line to PE switches shall have permanent indicating gauge.

S. Local Control Panels.

1. Indoor control panels shall be fully enclosed NEMA 1 construction with hinged door key-lock latch and removable sub-panels. A common key shall open each control panel and sub-panel.
2. Prewire internal and face-mounted device connections with color-coded stranded conductors tie-wrapped or neatly installed in plastic troughs. Field connection terminals shall be UL listed for 600 V service, individually identified per control and interlock drawings, with adequate clearance for field wiring.
3. Each local panel shall have a control power source power switch (on-off) with overcurrent protection.

T. Glycol Monitoring Sensor

1. MISCO M111 Inline Refractometer

U. Carbon Monoxide Detectors:

1. Single or multichannel dual level detectors using solid state sensors with three year minimum life. Temperature environment 23 to 130 degrees F.
2. Provide individual indicators and controllers for each level initially calibrated for 50 ppm and 100 ppm.
3. Maximum response time to 100 ppm CO calibration gas is 2 minutes.

V. Electronic Valve/Damper Position Indication: Visual scale indicating percent of travel and 2- to 10-V dc, feedback signal.

W. Carbon-Dioxide Sensor and Transmitter: Single detectors, using solid-state infrared sensors, suitable over a temperature range of 23 to 130 deg F, calibrated for 0 to 2 percent, with continuous or averaged reading, 4 to 20 mA output.

2.9 AIRFLOW MONITORING STATIONS (where indicated on drawings)

A. Provide airflow/temperature measurement devices (ATMD) where indicated on the plans. Fan inlet measurement devices shall not be substituted for duct or plenum measurement devices indicated on the plans.

B. Manufactures EBTRON, Inc. Model GTx116-P and GTx116-F (basis of design Provide full 3 year warranty. Alternative manufactures Kurtz Industries or Siera Instruments.

C. Each ATMD shall consist of one or more sensor probes and a single, remotely mounted, microprocessor-based transmitter capable of independently processing up to 16 independently wired sensor assemblies.

1. Each sensor assembly shall contain two individually wired, hermetically sealed bead-in-glass thermistors.
2. Thermistors shall be mounted in the sensor assembly using a marine-grade, waterproof epoxy. Thermistor leads shall be protected and not exposed to the environment.
3. The airflow rate of each sensor assembly shall be equally weighted and averaged by the transmitter prior to output.
4. The temperature of each sensor assembly shall be velocity weighted and averaged by the transmitter prior to output.
5. Each transmitter shall have a 16-character alpha-numeric display capable of displaying airflow, temperature, system status, configuration settings and diagnostics.
6. Devices using chip-in-glass or diode-case chip thermistors are not acceptable.
7. Devices using less than two thermistors in each sensor assembly are not acceptable.
8. Devices using platinum wire RTDs are not acceptable.
9. Devices having electronic circuitry mounted in or at the sensor probe are not acceptable.
10. Pitot tubes and arrays are not acceptable.
11. Vortex shedding devices are not acceptable.

D. All Sensor Probes

1. Each sensor assembly shall independently determine the airflow rate and temperature at each measurement point.
2. Each sensor assembly shall be calibrated at a minimum of 16 airflow rates and 3 temperatures to standards that are traceable to the National Institute of Standards and Technology (NIST).
3. Airflow accuracy shall be +/-2% of Reading over the entire operating airflow range.

    a. Devices whose accuracy is the combined accuracy of the transmitter and sensor probes must demonstrate that the total accuracy meets the performance requirements of this specification throughout the measurement range.
4. Temperature accuracy shall be +/-0.15° F over the entire operating temperature range of -20° F to 160° F.
5. The operating humidity range for each sensor probe shall be 0-99% RH (non-condensing).
6. Each sensor probe shall have an integral, U.L. listed, plenum rated cable and terminal plug for connection to the remotely mounted transmitter. All terminal plug interconnecting pins shall be gold plated.
7. Each sensor assembly shall not require matching to the transmitter in the field.
8. A single manufacturer shall provide both the airflow/temperature measuring probe(s) and transmitter for each measurement location.

E. Duct and Plenum Probes

1. Probes shall be constructed of extruded, gold anodized, 6063 aluminum tube. All wires within the aluminum tube shall be Kynar coated.

2. Probe assembly mounting brackets shall be constructed of 304 stainless steel. Probe assemblies shall be mounted using one of the following options:

   a. Insertion mounted through the side or top of the duct
   b. Internally mounted inside the duct or plenum
   c. Standoff mounted inside the plenum

3. The number of sensor housings provided for each location shall be as follows:

Duct or plenum sq ft	Total # of sensors/location
<2	4
2 to < 4	6
4 to < 8	8
8 to <16	12
>=16	16

4. The operating airflow range shall be 0 to 5,000 FPM unless otherwise indicated on the plans.

F. Fan Inlet Probes

1. Sensor assemblies shall be mounted on 304 stainless steel housings.
2. Mounting rods shall be field adjustable to fit the fan inlet and constructed of nickel plated steel.
3. Mounting feet shall be constructed of 304 stainless steel.
4. The operating airflow range shall be 0 to 10,000 FPM unless otherwise indicated on the plans.

G. Transmitters

1. The transmitter shall have an integral LCD display capable of simultaneously displaying airflow and temperature. The LCD display shall be capable of displaying individual airflow and temperature readings of each independent sensor assembly.

2. The transmitter shall be capable of field configuration and diagnostics using an on-board pushbutton interface and LCD display.

3. The transmitter shall have a power switch and operate on 24 VAC (isolation not required).

   a. The transmitter shall use a switching power supply fused and protected from transients and power surges.

   b. The transmitter shall use "watch-dog" circuitry to assure reset after power disruption, transients and brown-outs.

4. All interconnecting pins, headers and connections on the main circuit board, option cards and cable receptacles shall be gold plated.

5. The operating temperature range for the transmitter shall be -20° F to 120° F. The transmitter shall be installed at a location that is protected from weather and water.

6. The transmitter shall be capable of communicating with other devices using one of the following interface options:

   a. Linear analog output signals for airflow and temperature: Field selectable, fuse protected and isolated, 0-10VDC/4-20mA (4-wire)

   b. RS-485: Field selectable BACnet-ARCNET, BACnet-MS/TP, Modbus-RTU

   c. BACnet devices shall provide analog variables for airflow and temperature containing individual sensor airflow rate and temperature data.

   d. 10 Base-T Ethernet: Field selectable BACnet Ethernet, BACnet-IP, Modbus-TCP and TCP/IP

   e. Provide dynamic link libraries and VBA functions to interface Ethernet devices to Microsoft Excel for remote monitoring of airflow and temperature using a Windows 2000 or Windows XP based PC.

   f. LonWorks Free Topology

7. The transmitter shall be capable of accepting an infra-red interface card for downloading airflow and temperature data or uploading transmitter configuration data using a handheld PDA (Palm or Microsoft Windows Mobile operating systems).

   a. Provide PDA upload/download software. Download software shall be capable of displaying and saving individual sensor airflow rates, the average airflow rate, individual sensor temperatures and the average temperature received from the transmitter. . Upload software shall be capable of displaying and saving all setup parameters that can be configured using the on-board pushbutton interface and LCD display.
   b. Provide a Microsoft Excel file capable of creating balance reports from PDA data files transferred to a Windows 98 or higher based PC.
   c. Provide a Microsoft Excel file to create configuration data files that can be transferred from a Windows 2000, Windows XP or higher based PC to a PDA for upload to one or more transmitters.

H. The ATMD shall be UL listed as an entire assembly.

I. The ATMD shall carry the CE Mark for European Union shipments.

J. The manufacturer's authorized representative shall review and approve placement and operating airflow rates for each measurement location indicated on the plans. A written report shall be submitted to the consulting mechanical engineer if any measurement locations do not meet the manufacturer's placement requirements.

2.10 WIRING AND RACEWAYS

A. General. Provide copper wiring, plenum cable, and raceways as specified in applicable sections of Division 26.

B. Insulated wire shall use copper conductors and shall be UL listed for 90°C (200°F) minimum service.

2.11 FIBER OPTIC CABLE SYSTEM

A. Optical Cable. Optical cables shall be duplex 900 mm tight-buffer construction designed for intra-building environments. Sheath shall be UL listed OFNP in accordance with NEC Article 770. Optical fiber shall meet the requirements of FDDI, ANSI X3T9.5 PMD for 62.5/125mm.

B. Connectors. Field terminate optical fibers with ST type connectors. Connectors shall have ceramic ferrules and metal bayonet latching bodies.

PART 3 - EXECUTION

3.1 EXAMINATION

A. Thoroughly examine project plans for control device and equipment locations. Report discrepancies, conflicts, or omissions to Architect or Engineer for resolution before starting rough-in work.

B. Inspect site to verify that equipment can be installed as shown. Report discrepancies, conflicts, or omissions to Engineer for resolution before starting rough-in work.

C. Examine drawings and specifications for work of others. Report inadequate headroom or space conditions or other discrepancies to Engineer and obtain written instructions for changes necessary to accommodate of this sectionand with work of others. Controls Contractor shall perform at his expense necessary changes in specified work caused by failure or neglect to report discrepancies.

3.2 PROTECTION

A. Controls Contractor shall protect against and be liable for damage to work and to material caused by Contractor's work or employees.

B. Controls Contractor shall be responsible for work and equipment until inspected, tested, and accepted. Protect material not immediately installed. Close open ends of work with temporary covers or plugs during storage and construction to prevent entry of foreign objects.

3.3 COORDINATION

A. Site.

1. Assist in coordinating space conditions to accommodate the work of each trade where work will be installed near or will interfere with work of other trades. If installation without coordination causes interference with work of other trades, Contractor shall correct conditions without extra charge.

2. Coordinate and schedule work with other work in the same area and with work dependent upon other work to facilitate mutual progress.

B. Submittals. See Article 1.10 (Submittals).

C. Test and Balance.

1. Provide Test and Balance Contractor a single set of necessary tools to interface to control system for testing and balancing.
2. Train Test and Balance Contractor to use control system interface tools.
3. Provide a qualified technician to assist with testing and balancing the first 20 terminal units.
4. Test and Balance Contractor shall return tools undamaged and in working condition at completion of testing and balancing.

D. Life Safety.

1. Duct smoke detectors required for air handler shutdown are provided under Division 26. Interlock smoke detectors to air handlers for shutdown as specified in Section 230993 (Sequences of Operation).
2. Smoke dampers and actuators required for duct smoke isolation are provided under Division 23. Interlock smoke dampers to air handlers as specified in Section 230993 (Sequences of Operation).
3. Fire and smoke dampers and actuators required for fire-rated walls are provided under Division 23. Fire and smoke damper control is provided under Division 26 unless otherwise specified.

E. Coordination with Other Controls. Integrate with and coordinate controls and control devices furnished or installed by others as follows.

1. Communication media and equipment shall be provided as specified in Article 2.2 (Communication).
2. Each supplier of a controls product shall configure, program, start up, and test that product to meet the sequences of operation described in Section 230993 regardless of where within the contract documents those products are described.
3. Coordinate and resolve incompatibility issues that arise between control products provided under this section and those provided under other sections or divisions of this specification.
4. Controls Contractor shall be responsible for integration of control products provided by multiple suppliers regardless of where integration is described within the contract documents.

3.4 GENERAL WORKMANSHIP

A. Install equipment, piping, and wiring or raceway horizontally, vertically, and parallel to walls wherever possible.

B. Provide sufficient slack and flexible connections to allow for piping and equipment vibration isolation.

C. Install equipment in readily accessible locations as defined by National Electrical Code (NEC) Chapter 1 Article 100 Part A.

D. Verify wiring integrity to ensure continuity and freedom from shorts and ground faults.

E. Equipment, installation, and wiring shall comply with industry specifications and standards and local codes for performance, reliability, and compatibility.

3.5 FIELD QUALITY CONTROL

A. Work, materials, and equipment shall comply with rules and regulations of applicable local, state, and federal codes and ordinances as identified in Article 1.8 (Codes and Standards).

B. Continually monitor field installation for code compliance and workmanship quality.

C. Contractor shall arrange for work inspection by local or state authorities having jurisdiction over the work.

3.6 WIRING

A. Control and interlock wiring and installation shall comply with national and local electrical codes, Division 26, and manufacturer's recommendations. Where the requirements of this section differ from Division 26, This section shall take precedence.

B. NEC Class 1 (line voltage) wiring shall be UL listed in approved raceway as specified by NEC and Division 26.

C. Low-voltage wiring shall meet NEC Class 2 requirements. Subfuse low-voltage power circuits as required to meet Class 2 current limit.

D. NEC Class 2 (current-limited) wires not in raceway but in concealed and accessible locations such as return air plenums shall be UL listed for the intended application.

E. Install wiring in raceway where subject to mechanical damage and at levels below 3 m (10ft) in mechanical, electrical, or service rooms.

F. Install Class 1 and Class 2 wiring in separate raceways. Boxes and panels containing high-voltage wiring and equipment shall not be used for low-voltage wiring except for the purpose of interfacing the two through relays and transformers.

G. Do not install wiring in raceway containing tubing.

H. Run exposed Class 2 wiring parallel to a surface or perpendicular to it and tie neatly at 3 m (10 ft) intervals.

I. Use structural members to support or anchor plenum cables without raceway. Do not use ductwork, electrical raceways, piping, or ceiling suspension systems to support or anchor cables.

J. Secure raceways with raceway clamps fastened to structure and spaced according to code requirements. Raceways and pull boxes shall not be hung on or attached to ductwork, electrical raceways, piping, or ceiling suspension systems.

K. Size raceway and select wire size and type in accordance with manufacturer's recommendations and NEC requirements.

L. Include one pull string in each raceway 2.5 cm (1 in.) or larger.

M. Use color-coded conductors throughout.

N. Locate control and status relays in designated enclosures only. Do not install control and status relays in packaged equipment control panel enclosures containing Class 1 starters.

O. Conceal raceways except within mechanical, electrical, or service rooms. Maintain minimum clearance of 15 cm (6 in.) between raceway and high-temperature equipment such as steam pipes or flues.

P. Adhere to requirements in Division 26 where raceway crosses building expansion joints.

Q. Install insulated bushings on raceway ends and enclosure openings. Seal top ends of vertical raceways.

R. Terminate control and interlock wiring related to the work of this section. Maintain at the job site updated (as-built) wiring diagrams that identify terminations.

S. Flexible metal raceways and liquid-tight flexible metal raceways shall not exceed 1 m (3 ft) in length and shall be supported at each end. Do not use flexible metal raceway less than ½ in. electrical trade size. Use liquid-tight flexible metal raceways in areas exposed to moisture including chiller and boiler rooms.

T. Install raceway rigidly, support adequately, ream at both ends, and leave clean and free of obstructions. Join raceway sections with couplings and according to code. Make terminations in boxes with fittings. Make terminations not in boxes with bushings.

3.7 COMMUNICATION WIRING

A. Communication wiring shall be low-voltage Class 2 wiring and shall comply with Article 3.7 (Wiring).

B. Install communication wiring in separate raceways and enclosures from other Class 2 wiring.

C. During installation do not exceed maximum cable pulling, tension, or bend radius specified by the cable manufacturer.

D. Verify entire network's integrity following cable installation using appropriate tests for each cable.

E. Install lightning arrestor according to manufacturer's recommendations between cable and ground where a cable enters or exits a building.

F. Each run of communication wiring shall be a continuous length without splices when that length is commercially available. Runs longer than commercially available lengths shall have as few splices as possible using commercially available lengths.

G. Label communication wiring to indicate origination and destination.

H. Ground coaxial cable according to NEC regulations article on "Communications Circuits, Cable, and Protector Grounding."

3.8 FIBER OPTIC CABLE

A. During installation do not exceed maximum pulling tensions specified by cable manufacturer. Post-installation residual cable tension shall be within cable manufacturer's specifications.

B. Install cabling and associated components according to manufacturers' instructions. Do not exceed minimum cable and unjacketed fiber bend radii specified by cable manufacturer.

3.9 INSTALLATION OF SENSORS

A. Install sensors according to manufacturer's recommendations.

B. Mount sensors rigidly and adequately for operating environment.

C. Install room temperature sensors on concealed junction boxes properly supported by wall framing.

D. Air seal wires attached to sensors in their raceways or in the wall to prevent sensor readings from being affected by air transmitted from other areas.

E. Use averaging sensors in mixing plenums and hot and cold decks. Install averaging sensors in a serpentine manner vertically across duct. Support each bend with a capillary clip.

F. Install mixing plenum low-limit sensors in a serpentine manner horizontally across duct. Support each bend with a capillary clip. Provide 3 m (1 ft) of sensing element for each 1 m^2 (1 ft^2) of coil area.

G. Install pipe-mounted temperature sensors in wells. Install liquid temperature sensors with heat-conducting fluid in thermal wells.

H. Install outdoor air temperature sensors on north wall at designated location with sun shield.

I. Differential Air Static Pressure.

1. Supply Duct Static Pressure. Pipe high-pressure tap to duct using a pitot tube. Make pressure tap connections according to manufacturer's recommendations.
2. Return Duct Static Pressure. Pipe high-pressure tap to duct using a pitot tube. Make pressure tap connections according to manufacturer's recommendations.
3. Building Static Pressure. Pipe pressure sensor's low-pressure port to the static pressure port located on the outside of the building through a high-volume accumulator. Pipe high-pressure port to a location behind a thermostat cover.

4. Piping to pressure transducer pressure ports shall contain a capped test port adjacent to transducer.
5. Pressure transducers, except those controlling VAV boxes, shall be located in control panels, not on monitored equipment or on ductwork. Mount transducers in a vibration-free location accessible for service without use of ladders or special equipment.
6. Mount gauge tees adjacent to air and water differential pressure taps. Install shut-off valves before tee for water gauges.

J. Smoke detectors, freezestats, high-pressure cut-offs, and other safety switches shall be hard-wired to de-energize equipment as described in the sequence of operation. Switches shall require manual reset. Provide contacts that allow DDC software to monitor safety switch status.

3.10 FLOW SWITCH INSTALLATION

A. Use correct paddle for pipe diameter.

B. Adjust flow switch according to manufacturer's instructions.

3.11 ACTUATORS

A. General. Mount actuators and adapters according to manufacturer's recommendations.

B. Electric and Electronic Damper Actuators. Mount actuators directly on damper shaft or jackshaft unless shown as a linkage installation. Link actuators according to manufacturer's recommendations.

1. For low-leakage dampers with seals, mount actuator with a minimum 5° travel available for damper seal tightening.
2. To compress seals when spring-return actuators are used on normally closed dampers, power actuator to approximately 5° open position, manually close the damper, then tighten linkage.
3. Check operation of damper-actuator combination to confirm that actuator modulates damper smoothly throughout stroke to both open and closed positions.
4. Provide necessary mounting hardware and linkages for actuator installation.

C. Valve Actuators. Connect actuators to valves with adapters approved by actuator manufacturer.

3.12 WARNING LABELS

A. Affix permanent warning labels to equipment that can be automatically started by the control system.

1. Labels shall use white lettering (12-point type or larger) on a red background.
2. Warning labels shall read as follows.

C A U T I O N
This equipment is operating under automatic control and may start or stop at any time without warning. Switch disconnect to "Off" position before servicing.

B. Affix permanent warning labels to motor starters and control panels that are connected to multiple power sources utilizing separate disconnects.

1. Labels shall use white lettering (12-point type or larger) on a red background.
2. Warning labels shall read as follows.

   CAUTION
   This equipment is fed from more than one power source with separate disconnects. Disconnect all power sources before servicing.

3.13 IDENTIFICATION OF HARDWARE AND WIRING

A. Label wiring and cabling, including that within factory-fabricated panels, with control system address or termination number at each end within 5 cm (2 in.) of termination.

B. Label pneumatic tubing at each end within 5 cm (2 in.) of termination with a descriptive identifier.

C. Permanently label or code each point of field terminal strips to show instrument or item served.

D. Label control panels with minimum 1 cm (½ in.) letters on laminated plastic nameplates.

E. Label each control component with a permanent label. Label plug-in components such that label remains stationary during component replacement.

F. Label room sensors related to terminal boxes or valves with nameplates.

G. Manufacturers' nameplates and UL or CSA labels shall be visible and legible after equipment is installed.

H. Label identifiers shall match record documents.

3.14 PROGRAMMING

A. Point Naming. Name points as shown on the equipment points list provided with each sequence of operation. See Sequences of Operation. If character limitations or space restrictions make it advisable to shorten the name, the abbreviations given in Appendix C may be used. Where multiple points with the same name reside in the same controller, each point name may be customized with its associated Program Object number. For example, "Zone Temp 1" for Zone 1, "Zone Temp 2" for Zone 2.

B. Software Programming. Programming shall provide actions for each possible situation. Graphic- or parameter-based programs shall be documented. Text-based programs shall be modular, structured, and commented to clearly describe each section of the program.

1. Application Programming. Provide application programming that adheres to sequences of operation specified in Section 230993. Program documentation or comment statements shall reflect language used in sequences of operation.
2. System Programming. Provide system programming necessary for system operation.

C. Operator Interface.

1. Standard Graphics. Provide graphics as specified in Article 2.3 Paragraph E.2 (System Graphics). Show on each equipment graphic input and output points and relevant calculated points such as indicated on the applicable Points List in Section 230993. Point information on graphics shall dynamically update.
2. Install, initialize, start up, and troubleshoot operator interface software and functions (including operating system software, operator interface database, and third-party software installation and integration required for successful operator interface operation) as described in Section this section.

3.15 CONTROL SYSTEM CHECKOUT AND TESTING

A. Startup Testing. Complete startup testing to verify operational control system before notifying Owner of system demonstration. Provide Owner with schedule for startup testing. Owner may have representative present during any or all startup testing.

1. Calibrate and prepare for service each instrument, control, and accessory equipment furnished under this section.
2. Verify that control wiring is properly connected and free of shorts and ground faults. Verify that terminations are tight.
3. Enable control systems and verify each input device's calibration. Calibrate each device according to manufacturer's recommendations.
4. Verify that binary output devices such as relays, solenoid valves, two-position actuators and control valves, and magnetic starters, operate properly and that normal positions are correct.
5. Verify that analog output devices such as I/Ps and actuators are functional, that start and span are correct, and that direction and normal positions are correct. Check control valves and automatic dampers to ensure proper action and closure. Make necessary adjustments to valve stem and damper blade travel.
6. Prepare a log documenting startup testing of each input and output device, with technician's initials certifying each device has been tested and calibrated.
7. Verify that system operates according to sequences of operation. Simulate and observe each operational mode by overriding and varying inputs and schedules. Tune PID loops and each control routine that requires tuning.
8. Alarms and Interlocks.

    a. Check each alarm with an appropriate signal at a value that will trip the alarm.
    b. Trip interlocks using field contacts to check logic and to ensure that actuators fail in the proper direction.
    c. Test interlock actions by simulating alarm conditions to check initiating value of variable and interlock action.

3.16 CONTROL SYSTEM DEMONSTRATION AND ACCEPTANCE

A. Demonstration. Prior to acceptance, perform the following performance tests to demonstrate system operation and compliance with specification after and in addition to tests specified in Article 3.17 (Control System Checkout and Testing). Provide Engineer with log documenting completion of startup tests.

1. Engineer will be present to observe and review system demonstration. Notify Engineer at least 10 days before system demonstration begins.

2. Demonstration shall follow process submitted and approved under Article 1.10 (Submittals). Complete approved checklists and forms for each system as part of system demonstration.
3. Demonstrate actual field operation of each sequence of operation as specified. Provide at least two persons equipped with two-way communication. Demonstrate calibration and response of any input and output points requested by Engineer. Provide and operate test equipment required to prove proper system operation.
4. Demonstrate compliance with Part 1 (System Performance).
5. Demonstrate compliance with sequences of operation through each operational mode.
6. Demonstrate complete operation of operator interface.
7. Demonstrate each of the following.

    a. DDC loop response. Supply graphical trend data output showing each DDC loop's response to a setpoint change representing an actuator position change of at least 25% of full range. Trend sampling rate shall be from 10 seconds to 3 minutes, depending on loop speed. Each sample's trend data shall show setpoint, actuator position, and controlled variable values. Engineer will require further tuning of each loop that displays unreasonably under- or over-damped control.
    b. Building fire alarm system interface.
    c. Trend logs for each system. Trend data shall indicate setpoints, operating points, valve positions, and other data as specified in the points list provided with each sequence of operation. Each log shall cover three 48-hour periods and shall have a sample frequency not less than 10 minutes or as specified on its points list. Logs shall be accessible through system's operator interface and shall be retrievable for use in other software programs as specified in Article 2.3 Paragraph E.11 (Trend Configuration).

8. Tests that fail to demonstrate proper system operation shall be repeated after Contractor makes necessary repairs or revisions to hardware or software to successfully complete each test.

B. Acceptance.

1. After tests described in this specification are performed to the satisfaction of both Engineer and Owner, Engineer will accept control system as meeting completion requirements. Engineer may exempt tests from completion requirements that cannot be performed due to circumstances beyond Contractor's control. Engineer will provide written statement of each exempted test. Exempted tests shall be performed as part of warranty.
2. System shall not be accepted until completed demonstration forms and checklists are submitted and approved as required in Article 1.10 (Submittals).

3.17 CLEANING

A. Each day clean up debris resulting from work. Remove packaging material as soon as its contents have been removed. Collect waste and place in designated location.

B. On completion of work in each area, clean work debris and equipment. Keep areas free from dust, dirt, and debris.

C. On completion of work, check equipment furnished under this section for paint damage. Repair damaged factory-finished paint to match adjacent areas. Replace deformed cabinets and enclosures with new material and repaint to match adjacent areas.

3.18 TRAINING

A. Provide training for a designated staff of Owner's representatives. Training shall be provided via self-paced training, web-based or computer-based training, classroom training, or a combination of training methods. Provide a total of 40 hours of training and additional adjustments. The 40 hours includes the three 4 hour class schedules. Additional class schedules if needed may be scheduled within the 40 hour training time if necessary.

B. Training shall enable students to accomplish the following objectives.

1. Proficiently operate system
2. Understand control system architecture and configuration
3. Understand DDC system components
4. Understand system operation, including DDC system control and optimizing routines (algorithms)
5. Operate workstation and peripherals
6. Log on and off system
7. Access graphics, point reports, and logs
8. Adjust and change system setpoints, time schedules, and holiday schedules
9. Recognize common HVAC system malfunctions by observing system graphics, trend graphs, and other system tools
10. Understand system drawings and Operation and Maintenance manual
11. Understand job layout and location of control components
12. Access data from DDC controllers
13. Operate portable operator's terminals
14. Create and change system graphics
15. Create, delete, and modify alarms, including configuring alarm reactions
16. Create, delete, and modify point trend logs (graphs) and multi-point trend graphs
17. Configure and run reports
18. Add, remove, and modify system's physical points
19. Create, modify, and delete application programming
20. Add operator interface stations
21. Add a new controller to system
22. Download firmware and advanced applications programming to a controller
23. Configure and calibrate I/O points
24. Maintain software and prepare backups
25. Interface with job-specific, third-party operator software
26. Add new users and understand password security procedures

C. Divide presentation of objectives into three 4 hour sessions (1-13, 14-23, and 24-26). Participants will attend one or more of sessions, depending on knowledge level required.

1. Day-to-day Operators (objectives 1-13)
2. Advanced Operators (objectives 1-13 and 14-23)
3. System Managers and Administrators (objectives 1-13 and 24-26)

D. Provide course outline and materials according to Article 1.10 (Submittals). Provide one copy of training material per student.

E. Instructors shall be factory-trained and experienced in presenting this material.

F. Perform classroom training using a network of working controllers representative of installed hardware.

3.19 WORK RELATING TO CONTROLS AND INSTRUMENTS

A. Under Sections 230900 as applicable, provide control wiring for the following:

1. All circuits actuated by a temperature control system component.
2. All circuits which actuate a temperature control component.
3. All control panel wiring to terminal strips and field wiring from terminal strips to field mounted devices.
4. All wiring from the "AUTO" side of hand-off-auto switches on units being controlled by Sections 230900.
5. Wiring of electro-mechanical devices required to be located on or in temperature control panels.
6. Wiring of DDC trunk, communication, and sensor cable wiring.
7. Wiring shall comply with material and workmanship standards of Division 26.
8. Wiring of damper and valve actuators, VAV box actuators, relays, transformers, PE switches and all other control apparatus.
9. All 120 volt power wiring to vav boxes, damper actuators, line voltage thermostats, valve actuators, relay's, etc. not powered by 24 volt power is work of this division. Wiring shall comply with material and workmanship standards of Division 26. Obtain 120 volt from local electrical panels or junction box. Coordinate with Division 26 contractor.
10. Wiring of line voltage fan isolation dampers located within fan curbs regardless of voltage in order to achieve specified sequence of operations.
11. Smoke detectors installed at transfer ducts to close associated dampers.

B. Under Division 26, perform the following work under supervision of Sections 230900:

1. Wiring of all devices and circuits carrying voltages greater than 110 volts unless otherwise noted.
2. Wiring of line and load power feeds to all disconnects, starters, and electric motors.
3. Wiring of 115 volt power feeds to all temperature control panels.
4. Power wiring to all motors 110 volt to 480 volt unless otherwise noted.
5. Furnish smoke detectors for mounting in ducts used for shutting down of air handling equipment. Smoke detectors installed at transfer ducts shall be provided by temperature control contractor.
6. Specific power feeds shown or specified in Div 26 documents.

PART 4 - SEQUENCE OF OPERATIONS

4.1 SEQUENCE OF OPERATIONS – GENERAL

A. General: Provide all required control devices, hardware and software to achieve the specified sequences of operation as outlined in these specifications and as detailed on drawings whether

indicated and/or implied. Refer to drawing for general I/O points. All points may not be listed and are indicated for general description.

B. BAS shall monitor and report all control function alarm points.

C. BAS shall monitor and report status of all equipment for use in sequence of operations, trending, verification. BAS shall also monitor valves and damper position as indicated.

D. All safeties shall operate whether the starters or VFD's are in the hand or automatic mode.

4.2 SEQUENCE OF OPERATIONS – SAFETIES

A. Supply and/or return duct mounted smoke detectors upon sensing products of combustion or a signal received from central fire alarm system shall shut down the air handling systems above 2000 cfm. Reset of smoke detector initiation shall be manual. Initiate an alarm upon shut down via duct smoke detector.

B. Upon building wide shutdown of air handling units from central fire alarm system, after the fire alarm is reset to normal mode, BAS shall automatically stage the re-start up of air handling units to eliminate simultaneous starting .

C. Freeze protection sensor element (Provide not less than one sensor for each 8 sq. ft. of coil face) located on the leaving side of the heating hot water coil shall de-energize the air handling unit, open HWS valve to control to setback casing temperure control and initiate an alarm if temperature on the leaving side of the coil drops below 38 deg. F. Reset shall be manual.

D. During unoccupied periods sensor located downstream of hot water coil or missed air sensor upstream of coil if sensor not located downstream shall modulate hot water control valve to maintain unit casing temperature above 40°F.

E. Duct mounted smoke dampers or combination fire smoke dampers shall only close upon activation of a duct mounted smoke detector or signal from central fire alarm panel to BAS. Dampers shall be reopened after a fire alarm system is reset to normal mode by BAS. Provide end switch to verify damper position. Provide and alarm if damper position is not in the open position while building fire alarm system is in normal safe mode.

F. Supply and return duct mounted high limit pressure sensors shall shut down both supply and return fans if discharge or inlet static pressures exceed pressure classification ratings of the ductwork or fans and an alarm generated at the BAS.

4.3 SEQUENCE OF OPERATIONS – CONTROL OF OUTSIDE AIR GENERAL

A. Outside air is controlled to satisfy whichever of the following predominates:

1. A minimum of 10% of rated total air volume. (Note 10% value is absolute minimum and shall be adjusted accordingly to ensure building maintains a slight positive pressure. Low end value shall not allow building to go neutral pressure).
2. The outside air volume required to satisfy the economizer cycle.
3. The outside air volume required to MAINTAIN a CO2 differential as described below.
4. OA intake will be limited to a maximum of the "design OA cfm" which is shown in the Schedule of Air Handling Units. This limit is not applicable to the economizer cycle.
5. Global outside CO2 sensor is required.

6. Outside air shall be measured by either airflow station or calculated using percent outside air routine utilizing supply, return airflow stations.

4.4 SEQUENCE OF OPERATIONS – OPTIMUM START

A. Each air handling system start up sequence shall include an optimal start routine. BAS shall trend time frame, based on outdoor and indoor conditions, it takes respective systems to achieve warmup/cooldown temperature setpoints. BAS shall automatically adjust startup schedules to achieve warmup/cooldown setpoints based on trended data.

4.5 SEQUENCE OF OPERATIONS – NIGHT SETBACK

A. BAS shall reset all space temperature during occupied area to the following schedule:

1. All spaces except telecommunication closets and elevator machine rooms: 55˚F (adj)
2. If any space shall drop below setback temperature respective systems shall energize and remain in operation until space temperature rises 3˚F (adj) above setback setpoint.

4.6 SEQUENCE OF OPERATION – CARBON DIOXIDE CONTROL GENERAL

A. BAS shall monitor return air CO2 sensor and modulate outside air dampers from units 10% minimum to maximum minimum scheduled. CO2 control shall be overridden during economizer.

B. Initially set the return CO2 sensors for 350 ppm above outside ambient readings.

C. If BAS fail to read a signal from the CO2 sensors or the sensor fails then the units outside air dampers shall open to scheduled minimum and an alarm shall be generated.

4.7 SEQUENCE OF OPERATION – ENTHALPY ECONOMIZER

A. Provide each air handling unit with an enthalpy controlled economizer unless otherwise noted. When outside air enthalpy is less than return air enthalpy outside air shall dampers shall be full open, return air closed and relief dampers open. Sequence chilled water valve as necessary to maintain discharge air setpoint or space setpoint.

4.8 SEQUENCE OF OPERATION – VFD STATUS

A. BAS system shall monitor all VFD alarms, associated motor speeds and report alarms.

4.9 SEQUENCE OF OPERATIONS – COMBUSTION AIR (SAF-1)

A. Upon call for the any boiler to start the combustion air fan motorized damper shall open and after proven open (SAF-1) shall be energized through manufacturers variable speed controller/panel to maintain a slight positive pressure. Refer to spec section 235113.14 for additional requirements. After flow has been proven then either appliance shall be enabled to start. If flow is not proven an alarm shall be generated and the heating appliances shall be locked out and an alarm generated.

4.10 SEQUENCE OF OPERATIONS – DOMESTIC HOT WATER COMBUSTION AIR (IP-3)

A. Upon a call for either domestic hot water heater to operate, open high and low combustion air dampers and after verification enable water heaters to fire. If damper status is not proven an alarm shall be generated and the heating appliances shall be locked out and an alarm generated

B. If temperatures in boiler room exceed setpoint open both high and low dampers to allow room gravity ventilation. If space setpoint satisfied then dampers shall be closed and under control on domestic hot water heater combustion air command.

4.11 SEQUENCE OF OPERATIONS – HEATING SYSTEM (B-1, B-2 AND B-3)

A. Heat Timer Multi Mod Modulation Panel shall control boiler operation. Refer to Specification section 235223 "Cast Iron Boilers". BMS will monitor alarms and initiate systems to start. BAS contractor to provide all integrated control wiring.

B. BAS shall initiate the heating system operation based on outside air temperature dropping below 60°F temperature (adjustable) and at least one floor space sensor calling for heating. Upon call for heating system to start, BAS shall start lead secondary system pump, start combustion air fans and after fan verified, primary hot water pump HWP-1, 2 or 3 shall start and the lead boiler B-1, B-2 or B-3 shall be initiated through the Heat Timer panel to fire. Lead boiler shall fire only after combustion air operation is proven. If combustion air system is not proven then an alarm shall be generated and boiler shall be unable to fire.

C. Prior to firing of either boiler, corresponding primary pump shall start with 3-way modulating valve open to boiler and bypassing secondary piping. Boiler HWR sensor shall modulate 3-way valve to maintain a minimum of 140 deg F HWR temp to the boiler at all times. If HWR temp is satisfied, boiler controller shall sequence firing rates to maintain secondary HWS temp based on reset schedule.

D. After shutdown of lead or lag boiler, corresponding primary pump shall continue to run with 3-way valve under control of return sensor. If outside temperature rises above 60 deg f, shutdown boiler and allow primary pump to run for an adjustable time period (5 minutes initially) to dissipate heat in boiler prior to pump shut down.

E. If either secondary pump or lead boiler does not energize the stand-by pump or lag boiler shall be initiated on and an alarm generated. If load is less than one boiler the lag boiler and primary pump shall be off.

F. Hot water pump VFD shall slowly ramp up the primary pump until system pressure set point is satisfied with pressure differential bypass valves open. The pressure differential by-pass control valves shall modulate to maintain loop pressure and minimum of 20% flow as verified by common supply pipe flow meter. As loop pressure decreases the bypass valve shall modulate closed prior to increasing pump speed while maintaining minimum flow. Further decrease in system pressure when bypass valve is approx 90 % closed increase hot water pump speed. Reverse order upon system pressure increase.

G. Hot water supply temperature shall be reset by the following schedule: 180 degree F HWS @ 10 degree F outside temperature and 140 degree F HWS @ 65 degree outside temperature. Boiler hot water setpoint shall remain constant at 180 degree F.

H. Based on a user defined schedule the lead/lag boilers and secondary/stand by pump shall be rotated to equalize run time.

I. Lead boiler shall start at low fire. Heat Timer Controller will modulate boiler based on system hot water temperature. When lead boiler reaches 80% load, initiate lag boiler to start sequence. Both boilers shall modulate at same load to meet hot water supply temperature setpoint. Upon decrease in load and each boiler load has modulated to 30% or less, de-energize lag boiler. Lead boiler will modulate to satisfy load.

J. In the event of an emergency, boilers shall be shut down through wall mounted breakglass stations.

4.12 SEQUENCE OF OPERATIONS – BOILER FUEL OIL PUMP

A. Boilers normally operate on natural gas. Fuel oil pumps shall be turned manually when required to switch to oil from gas. BAS to monitor runtimes and alarms.

4.13 SEQUENCE OF OPERATIONS – BOILER ROOM CO CONTROL

A. Space mounted CO sensor shall shut down boilers and domestic hot water heaters and start local exhaust fan (GX-18) if levels of CO rise above acceptable levels and a visual and audible alarm generated. Locate alarms in the corridor above the boiler room door.

4.14 SEQUENCE OF OPERATIONS – CHILLED WATER SYSTEM

A. Chilled water system shall be enabled on through the BAS system when the outside temperature rises above 55 degree F, at least one space calling for cooling and the air handling units are not operating in the dry bulb economizer mode. BAS shall monitor and report chiller alarms.

B. The system is configured with a variable primary pump and one standby pump configuration. Upon a call for the chilled water system to start, pressure differential bypass valve shall open, after position verified the lead pump (CHP-1 or CHP-2) shall be started and remain under control of pump variable frequency controller to maintain system pressure setpoint. VFD shall slowly ramp up pump speed to satisfy the higher of two differential pressure sensor setpoint in piping. The chiller (CH-1) shall be enabled after chilled water flow is verified by chilled water flow switch and shall operate under own controls to maintain CHS temperature (44°F adj.). BAS system shall monitor status. If either the pumps or chiller fail to start, an alarm shall be generated. Switching to the standby pump shall be automatic.

C. The pressure differential by-pass control valves shall modulate to maintain loop pressure and minimum flow of 560 gpm as verified by common supply pipe flow meter with chiller operating. As loop pressure decreases the bypass valve shall modulate closed prior to increasing pump speed while maintaining minimum chiller flow. Further decrease in system pressure when bypass valve is approx 90 % close increase chilled water pump speed. Reverse order upon system pressure increase.

D. CH-1 packaged heat trace controls shall maintain chiller evaporator at temperatures to prevent freezing. BAS shall monitor current to control circuit and report an alarm on loss of current if temperatures outside are below 35°F.

E. Outside temperature below 15 degrees F shall turn on lead chilled water pump to circulate chilled water at minimum flow for additional freeze protection. Pump shall be off above 15 degrees if not required to run under normal conditions.

F. Upon system shutdown of all air handling units based on occupancy schedule, delay closing of chilled water valve to allow differential system to stabilize prior to shutting down chiller and pumps.

4.15 SEQUENCE OF OPERATIONS – VARIABLE AIR VOLUME AIR HANDLING UNITS (AHU-1, 4, 6A, 6B, 7, 8, 9, 10)

A. When supply fan is shut down, relief fan is shut down, the outside and relief/spill dampers are shut tight, heating coil valve is controlled by air sensors immediately downstream of coil. (Provide not less than one sensor for each 8 sq. ft. of coil face). Upon a signal from the BAS system to start the return damper shall open with relief and outside air damper at full closed, start supply air fans. Fans shall be controlled under specific mode of operation.

B. Hours of operation will be set at the building's central panel. Modes of operation will be:

1. Unoccupied cooling.
2. Unoccupied heating.
3. Cooldown or Warmup.
4. Occupied summer.
5. Occupied winter.

C. Unoccupied cooling (ambient temperature above 55 F)

1. Outdoor air dampers are closed, fans are stopped. Cooling and heating coil valves are shut.

D. Unoccupied heating (ambient temperature below 55 F)

1. Outside air dampers are closed. Fans are off. Cooling coil valves are shut. Heating coil valves are under control of sensors immediately downstream of coils shall modulate to maintain minimum inside casing temperature of 45 degrees F. When room temperature drops to 55 degrees F, radiant panels shall be first stage for heating and if further drop in space temp initiate warmup cycle (as described below) is actuated. When space temperature rises to 65 degrees F, warmup terminates and fan stops.

E. Cooldown or Warmup (Optimal schedule)

1. Prior to occupied operation (adjustable lead time), the supply fan starts, relief fan is off, and run with outside dampers shut, and under duct pressure control. After a 3 minute run time, the system reverts to a cooldown or warmup mode, depending upon temperature of return air.
2. If return air temperature is above 80, cooldown commences. OA dampers are shut. Exhaust fans are off. Chilled water valve is modulated under control of return air temperature. Normal occupied cooling resumes after average room air temperature comes down to 75 degrees F.
3. If return air temperature is below 68 F, warmup commences. Return air sensor and/or average space temperature modulates the hot water control valve, subject to a high limit of 85 F discharge air temp. Warmup terminates when average space temperature has remained above 72 deg F for a preset time period (try 30 minutes initially). Adjust the time delay as needed to allow for thermal capacitance of building construction materials.
4. After cooldown or warmup is complete, open outside air damper to specified position. Relief fan shall be under control s described below.

F. Occupied Summer (ambient temperature above 55 degrees)

1. Temperature sensor immediately downstream of chilled water coil, as reset by a return air sensor and remote zone calling, through its controller (vav air handling units), shall control sequencing of chilled water coil control valve, (occupied mode) in response to air handling unit discharge temperature. Controller shall employ a dynamic self tuning algorithm.

G. Occupied Winter (ambient temperature below 55 degrees F)

1. The fan discharge sensor modulates variable outside air dampers and heating coil control valve in sequence (with dead band between). Provide independent low limit controllers immediately downstream of heating coils, set at 45 degrees.

H. Occupied Heating or Cooling

1. Associated exhaust fans per HV unit shall be energized to run through the BAS system only when the building is in the occupied mode per the following schedule:

AIR HANDLING UNIT	EXHAUST FANS
AHU-1	TX-3, 4
AHU-4	TX-3
AHU-6A,	TX-2
AHU-6B	TX-1
AHU-7	TX-10, 11
AHU-8	TX-5, 6, 8, 9
AHU-9	TX-8
AHU-10	TX-19, 20

I. VAV Zone Control

1. A room temperature sensor sequences the radiation or radiant panel control valve (if exists), the reheat coil, and the air valve.
2. VAV air volume controller will have a maximum CFM and minimum CFM adjustment. Adjust maximum and minimum CFM to the cfm shown on the drawings.
3. For each reheat coil, provide a HW control valve and modulate it in sequence with the VAV damper.
4. During warmup, position VAV damper to maximum CFM with reheat valve closed.
5. Room temperature set points, operating temperature, air volume and status will be monitored at the central panel. Set points will be remotely adjustable.
6. Refer to additional vav/radiant control below.

J. Provide Freezestat controls in each unit, as described in the general descriptions.

K. Supply Fan volume control.

1. A static pressure pickup sensor in the supply duct, referenced to outside air, located approximately two thirds down the main supply duct will, through a controller with P-I-D control algorithm, modulate a variable frequency fan speed controller, to maintain the static pressure setting. Provide a high limit pressure sensor with two setpoints. One setpoint to alarm above-normal pressures, the second setpoint, set higher, to shut the fan down.
2. BAS shall monitor return fan airflow to verify cfm offset as described above.

L. Control of air dampers and relief:

1. Interconnect the outside air (OA) and return air (RA) dampers so that when OA damper opens, the RA damper closes. Control these dampers in the manner described, to regulate outside air intake.
2. Control the relief damper and fan independently via a static pressure sensor to maintain a slight building positive pressure with in the respective building zone. Upon a rise in building pressure vary speed of relief fan to maintain setpoint. Relief fan shall be off when not needed to maintain building pressure. Do not hold at minimum speed.
3. BAS system shall monitor position of duct mounted smoke dampers and indicate an alarm if damper fails to open or close.

M. HRU-1 AND HRU-2 shall be interlocked to operate with respective AHU's under occupied schedules.

4.16 SEQUENCE OF OPERATIONS – VARIABLE TEMPERATURE CONSTANT VOLUME AIR HANDLING UNITS (FAN COIL UNITS FC-9 through 16 and AHU-2)

A. This unit controls a single zone by varying supply air temperature.

B. When supply fan is shut down, outside dampers are shut tight, heating coil valve is controlled by air sensors immediately downstream of coil. (Provide a sensor for each coil section).

C. Hours of operation will be set at the building central panel. Modes of operation will be:

1. Unoccupied cooling.
2. Unoccupied heating.
3. Cooldown.
4. Warmup.
5. Occupied summer.
6. Occupied winter.

D. Unoccupied cooling (ambient temperature above 55 degrees F):

1. Outdoor air dampers are closed, fan is stopped. Cooling and heating coil valves are closed.

E. Unoccupied heating (ambient temperature below 55 degrees F)

1. Outside air dampers are closed. Fan is off. Cooling coil valves are shut. Heating coil valves remain under control of sensors immediately downstream of coils. When room temperature drops to 55 degrees F, warmup cycle (as described below) is actuated. When space temperature rises 10 degrees F, warmup terminates and fan stops.

F. Cooldown or Warmup Modes (Optimal start schedule)

1. Upon startup, the AH unit first goes through a cooldown or warmup mode. The supply fan shall start and run with outside dampers shut. After a 3 minute time delay, the system goes into a cooldown or warmup mode, depending upon temperature of return air.
2. Return air temperature above 80 degrees F, cooldown commences. Chilled water valve modulates under control of room air temperature. Normal occupied cooling resumes after room air temperature comes down to 75 degrees F.
3. Return air temperature below 68 degrees F warmup commences. Air discharge temperature is controlled by room temperature, subject to a maximum of 85 degrees F. Warmup terminates when room temperature has increased to 72 degrees F, subject to time delay as described below, before reverting to normal operation.
4. Provide an adjustable time delay to hold the system in warmup after reaching 72 F, for a preset time, before reverting to normal occupied mode. Adjust this delay based on observed need for thermal stability.

G. Occupied Summer (ambient temperature above 55 degrees F)

1. A space temperature signal will modulate the cooling coil valve to maintain space setpoint. Discharge temperature sensor will prevent supply air temperature from dropping below preset miminum. Controller shall have P-I-D control algorithm.
2. Outside dampers shall be as item 4 above subject to a maximum limit OA cfm shown in the AHU schedule under "OA." Relief air dampers will be controlled by gravity weighted damper.

H. Occupied Winter (ambient temperature below 55 degrees F)

1. Space sensor shall sequence heating coil control valve and outside air dampers to maintain space temperature. Outside dampers shall be as item 4 above subject to a maximum limit OA cfm shown in the AHU schedule under "OA." Relief air dampers will be controlled by gravity weighted damper.
2. Provide independent low limit controllers immediately downstream of heating coils, set at 45 degrees.

I. Provide Freezestat controls in each unit, as described in the general descriptions.

J. When FCU-9 to 16 are in economizer mode, gravity damper connected to relief outlet on return duct shall open to direct relief air into the main shop areas.

K. FCU-10 is in economizer mode sequence outside air, return air and relief air dampers to maintain a slight negative in electronics with respect to ambient.

L. Units with condensate pumps shall be connected into condensate pump safety switch to deenergize fan coil and close chilled water valve upon high condensate level in condensate pump.

M. When AHU-2 is in economizer mode, gravity damper connected to relief outlet on return duct shall open to direct relief air to exterior of building.

4.17 SEQUENCE OF OPERATIONS – VARIABLE TEMPERATURE/VARIABLE FLOW AIR HANDLING UNITS (HV-6A, 6B)

A. This unit controls a single zone by varying supply air temperature and varying outside air to maintain minimum pressure differential between space and corridor of -.03 in.wc. Units can operate independently or if operating at same time shall sequence together to maintain static pressure offset..

B. When supply fan is shut down, exhaust fan is de-energized, outside and relief dampers are shut tight, heating coil valve is controlled by air sensors immediately downstream of coil. (Provide a sensor for each coil section).

C. Supply fan shall be variable based on maintaining space pressure differential offset.

D. Hours of operation will be set at the building central panel. Modes of operation will be:

1. Unoccupied heating.
2. Occupied summer.
3. Occupied winter.

E. Unoccupied heating (ambient temperature below 55 degrees F)

1. Outside air dampers and exhaust dampers closed and fans are off. Heating coils valves operate as described above. Heating coil valves remain under control of sensors immediately downstream of coils.

2. When room temperature drops to 55 degrees F, and space unit heaters shall cycle to maintain space temperature. When space temperature rises 10 degrees F, unit haters shall be off.

F. Occupied Summer (ambient temperature above 70 degrees F)

1. Outside air damper shall open, heat exchanger bypass damper closed and supply fan shall start at 50% speed after outside air damper proven open. Exhaust fan shall be energized on after exhaust damper opens and speed shall vary to maintain space pressure differential offset.

2. As additional exhaust fans or units are energized unit exhaust fan shall reduce speed and eventually shut down. If space static cannot be maintained, is in excess of setpoint or space temperature continues to rise increase supply fan incrementally to 100% speed to allow more outside air.

3. As static pressure varies depending on space exhaust and space temperature is still above setpoint stage on unit exhaust fan to maintain setpoint.

4. Whenever associated exhaust fan GX-51 is running, respective units outside air dampers shall go full open to maintain while still under control of space pressure differential offset.

5. If outside air temperature is above return air temperature, close outside air to heat recovery coil and open bypass damper.

G. Occupied Winter (ambient temperature below 70 degrees F)

1. Outside air damper shall open, heat exchanger bypass damper closed and supply fan shall start at 50% speed after outside air damper proven open. Exhaust fan shall be energized on after exhaust damper opens and speed shall vary to maintain space pressure differential offset.

2. As additional exhaust fans or units are energized unit exhaust fan shall reduce speed and eventually shut down. If space static cannot be maintained, is in excess of setpoint or space temperature continues to rise increase supply fan incrementally to 100% speed to allow more outside air.

3. As static pressure varies depending on space exhausts stage on unit exhaust fan to maintain setpoint.

4. Drop in space sensor below setpoint shall sequence heating coil control valve, to maintain space temperature.

5. Outside air bypass dampers shall modulate based on heat exchanger exhaust air temperature to ensure unit leaving exhaust temp stays above 34 degrees F to prevent heat exchanger frosting if exhaust fan is operating.

6. Cold start up with outside air temperature below freeze stat setting of 38 degrees F, prior to starting of unit open hot water valve to flow water in coil to prevent nuisance freeze stat tripping while slowly ramping up speed of fan. Once system stabilize return hot water coil control to normal.

H. Provide Freezestat controls in each unit, as described in the general descriptions.

I. Fan speed control

1. Supply fans shall start at low speed and shall operate as described above unless space CO rises above 25 ppm. Upon rise in CO above setpoint, supply fan shall go to 100% fan speed and exhaust fan shall control to maintain static pressure if required to operate. Hot water coil shall operate as on occupied heating mode.

J. Occupied Heating or Cooling

1. Associated exhaust fans per HV unit shall be energized to run through the BAS system only when the building is in the occupied mode per the following schedule:

AIR HANDLING UNIT	EXHAUST FANS
HV6A, 6B	GX-13, 15, 16, TX-17

4.18 SEQUENCE OF OPERATIONS – VARIABLE TEMPERATURE/VARIABLE FLOW AIR HANDLING UNITS (HV-7A, 7B)

A. This unit controls a single zone by varying supply air temperature and varying outside air to maintain minimum pressure differential between space and corridor of -.03 in.wc. Both units shall operate together.

B. When supply fan is shut down, exhaust fan is de-energized, outside and relief dampers are shut tight, heating coil valve is controlled by air sensors immediately downstream of coil. (Provide a sensor for each coil section).

C. Supply fan shall be variable based on maintaining space pressure differential offset.

D. Hours of operation will be set at the building central panel. Modes of operation will be:

1. Unoccupied heating.
2. Occupied summer.
3. Occupied winter.

E. Unoccupied heating (ambient temperature below 55 degrees F)

1. Outside air dampers and exhaust dampers closed and fans are off. Heating coils valves operate as described above. Heating coil valves remain under control of sensors immediately downstream of coils.

2. When room temperature drops to 55 degrees F, and space unit heaters shall cycle to maintain space temperature. When space temperature rises 10 degrees F, unit haters shall be off.

F. Occupied Summer (ambient temperature above 70 degrees F)

1. Outside air damper shall open, heat exchanger bypass damper closed and supply fan shall start at 50% speed after outside air damper proven open. Exhaust fan shall be energized on after exhaust damper opens and speed shall vary to maintain space pressure differential offset.

2. As additional exhaust fans or units are energized unit exhaust fan shall reduce speed and eventually shut down. If space static cannot be maintained, is in excess of setpoint or space temperature continues to rise increase supply fan incrementally to 100% speed to allow more outside air.

3. As static pressure varies depending on space exhaust and space temperature is still above setpoint stage on unit exhaust fan to maintain setpoint.

4. Whenever associated exhaust fan GX-52 is running, respective units outside air dampers shall go full open to maintain while still under control of space pressure differential offset.

5. If outside air temperature is above return air temperature, close outside air to heat recovery coil and open bypass damper.

G. Occupied Winter (ambient temperature below 70 degrees F)

1. Outside air damper shall open, heat exchanger bypass damper closed and supply fan shall start at 50% speed after outside air damper proven open. Exhaust fan shall be energized on after exhaust damper opens and speed shall vary to maintain space pressure differential offset.

2. As additional exhaust fans or units are energized unit exhaust fan shall reduce speed and eventually shut down. If space static cannot be maintained, is in excess of setpoint or space temperature continues to rise increase supply fan incrementally to 100% speed to allow more outside air.

3. As static pressure varies depending on space exhausts stage on unit exhaust fan to maintain setpoint.

4. Drop in space sensor below setpoint shall sequence heating coil control valve to maintain space temperature.

5. Outside air bypass dampers shall modulate based on heat exchanger exhaust air temperature to ensure unit leaving exhaust temp stays above 34 degrees F to prevent heat exchanger frosting if exhaust fan is operating.

6. Cold start up with outside air temperature below freeze stat setting of 38 degrees F, prior to starting of unit open hot water valve to flow water in coil to prevent nuisance freeze stat tripping while slowly ramping up speed of fan. Once system stabilize return hot water coil control to normal.

H. Provide Freezestat controls in each unit, as described in the general descriptions.

I. Fan speed control

1. Supply fans shall start at low speed and shall operate as described above unless space CO rises above 25 ppm. Upon rise in CO above setpoint, supply fan shall go to 100% fan speed and exhaust fan shall control to maintain static pressure if required to operate. Hot water coil shall operate as on occupied heating mode.

J. Occupied Heating or Cooling

1. Associated exhaust fans per HV unit shall be energized to run through the BAS system only when the building is in the occupied mode per the following schedule:

AIR HANDLING UNIT	EXHAUST FANS
HV7A,7B	GX-13, 15, TX-16

4.19 SEQUENCE OF OPERATIONS – VARIABLE TEMPERATURE/VARIABLE FLOW AIR HANDLING UNITS (HV-8)

A. This unit controls a single zone by varying supply air temperature and varying outside air to maintain minimum pressure differential between space and atmosphere of -.03 in.wc.

B. When supply fan is shut down, exhaust fan is de-energized, outside and relief dampers are shut tight, heating coil valve is controlled by air sensors immediately downstream of coil. (Provide a sensor for each coil section).

C. Supply fan shall be variable based on maintaining space pressure differential offset.

D. Hours of operation will be set at the building central panel. Modes of operation will be:

1. Unoccupied heating.
2. Occupied summer.
3. Occupied winter.

E. Unoccupied heating (ambient temperature below 55 degrees F)

1. Outside air dampers and exhaust dampers closed and fans are off. Heating coils valves operate as described above. Heating coil valves remain under control of sensors immediately downstream of coils.

2. When room temperature drops to 55 degrees F, and space unit heaters shall cycle to maintain space temperature. When space temperature rises 10 degrees F, unit haters shall be off.

F. Occupied Summer (ambient temperature above 70 degrees F)

1. Outside air damper shall open, heat exchanger bypass damper closed and supply fan shall start at 25% speed after outside air damper proven open. Exhaust fan shall be energized on after exhaust damper opens and speed shall vary to maintain space pressure differential offset.

2. As additional exhaust fans or units are energized unit exhaust fan shall reduce speed and eventually shut down. If space static cannot be maintained, is in excess of setpoint or space temperature continues to rise increase supply fan incrementally to 100% speed to allow more outside air.

3. As static pressure varies depending on space exhaust and space temperature is still above setpoint stage on unit exhaust fan to maintain setpoint.

4. If outside air temperature is above return air temperature, close outside air to heat recovery coil and open bypass damper.

G. Occupied Winter (ambient temperature below 70 degrees F)

1. Outside air damper shall open, heat exchanger bypass damper closed and supply fan shall start at 25% speed after outside air damper proven open. Exhaust fan shall be energized on after exhaust damper opens and speed shall vary to maintain space pressure differential offset.

2. As additional exhaust fans or units are energized unit exhaust fan shall reduce speed and eventually shut down. If space static cannot be maintained, is in excess of setpoint or space temperature continues to rise increase supply fan incrementally to 100% speed to allow more outside air.

3. As static pressure varies depending on space exhausts stage on unit exhaust fan to maintain setpoint.

4. Drop in space sensor below setpoint shall sequence heating coil control valve to maintain space temperature.

5. Outside air bypass dampers shall modulate based on heat exchanger exhaust air temperature to ensure unit leaving exhaust temp stays above 34 degrees F to prevent heat exchanger frosting if exhaust fan is operating.

6. Cold start up with outside air temperature below freeze stat setting of 38 degrees F, prior to starting of unit open hot water valve to flow water in coil to prevent nuisance freeze stat tripping while slowly ramping up speed of fan. Once system stabilize return hot water coil control to normal.

H. Provide Freezestat controls in each unit, as described in the general descriptions.

I. Fan speed control

1. Supply fans shall start at low speed and shall operate as described above unless space CO rises above 25 ppm. Upon rise in CO above setpoint, supply fan shall go to 100% fan speed and exhaust fan shall control to maintain static pressure if required to operate. Hot water coil shall operate as on occupied heating mode.

J. Occupied Heating or Cooling

1. Associated exhaust fans per HV unit shall be energized to run through the BAS system only when the building is in the occupied mode per the following schedule:

AIR HANDLING UNIT	EXHAUST FANS
HV8	TX-21

4.20 SEQUENCE OF OPERATIONS – VARIABLE TEMPERATURE CONSTANT VOLUME AIR HANDLING UNITS (RTU-1)

A. This unit controls a single zone by varying supply air temperature.

B. When supply fan is shut down, exhaust fan is off, outside air and relief dampers are shut tight, heating coil valve is controlled by air sensors immediately downstream of coil. (Provide a sensor for each coil section).

C. Hours of operation will be set at the building central panel. Modes of operation will be:

1. Unoccupied cooling.
2. Unoccupied heating.
3. Cooldown.
4. Warmup.
5. Occupied summer.
6. Occupied winter.

D. Unoccupied cooling (ambient temperature above 55 degrees F):

1. Outdoor air and relief dampers are closed, fans are stopped. Cooling and heating coil valves are closed.

E. Unoccupied heating (ambient temperature below 55 degrees F)

1. Outside air and relief dampers are closed. Fans are off. Cooling coil valves are shut. Heating coil valves remain under control of sensors immediately downstream of coils. When room temperature drops to 55 degrees F, warmup cycle (as described below) is actuated. When space temperature rises 10 degrees F, warmup terminates and fan stops.

F. Cooldown or Warmup Modes (Optimal start schedule)

1. Upon startup, the AH unit first goes through a cooldown or warmup mode. The supply fan shall start, exhaust fan off, and run with outside air and relief dampers shut. After a 3 minute time delay, the system goes into a cooldown or warmup mode, depending upon temperature of return air.
2. Return air temperature above 80 degrees F, cooldown commences. Chilled water valve modulates under control of room air temperature. Normal occupied cooling resumes after room air temperature comes down to 75 degrees F.
3. Return air temperature below 68 degrees F warmup commences. Air discharge temperature is controlled by room temperature, subject to a maximum of 85 degrees F. Warmup terminates when room temperature has increased to 72 degrees F, subject to time delay as described below, before reverting to normal operation.
4. Provide an adjustable time delay to hold the system in warmup after reaching 72 F, for a preset time, before reverting to normal occupied mode. Adjust this delay based on observed need for thermal stability.

G. Occupied Summer (ambient temperature above 55 degrees F)

1. A space temperature signal will modulate the cooling coil valve to maintain space setpoint. Discharge temperature sensor will prevent supply air temperature from dropping below preset minimum. Controller shall have P-I-D control algorithm.

H. Occupied Winter (ambient temperature below 55 degrees F)

1. Space sensor shall sequence heating coil control valve to maintain space temperature. Respective exhaust fan(s) shall run when unit is in occupied mode.
2. RTU fan speed shall be varied as described above subject to a 100°F maximum discharge supply temperature.
3. Provide Freezestat controls in each unit, as described in the general descriptions.

I. Exhaust fan control

1. Unit exhaust fan shall be controlled to maintain a slight negative pressure (-0.03) in the space as reference to atmosphere.

J. Control of air dampers:

1. Interconnect the outside air (OA) and return air (RA) dampers so that when OA damper opens, the RA damper closes. Control these dampers in the manner described, to regulate outside air intake.

K. Occupied Heating or Cooling

1. Associated exhaust fans per unit shall be energized to run through the BAS system only when the building is in the occupied mode per the following schedule:

AIR HANDLING UNIT	EXHAUST FANS
RTU-1	TX-7

4.21 SEQUENCE OF OPERATIONS – VARIABLE TEMPERATURE CONSTANT VOLUME HEATING AND VENTILATION AIR HANDLING UNITS (HV-1, 2, 3, 4 & 5)

A. This unit controls a single zone by varying supply air temperature and varying outside air to maintain minimum pressure differential between space and corridor of -.03 in.wc.

B. When supply fan is shut down, outside dampers are shut tight, heating coil valve is controlled by air sensors immediately downstream of coil. (Provide a sensor for each coil section).

C. Hours of operation will be set at the building central panel. Modes of operation will be:

1. Unoccupied heating.
2. Warmup.
3. Occupied summer.
4. Occupied winter.

D. Unoccupied heating (ambient temperature below 55 degrees F)

1. Outside air dampers are closed. Fan is off. Heating coil valves remain under control of sensors immediately downstream of coils. When room temperature drops to 55 degrees F, exterior unit heaters shall cycle to maintain space setback temperature. If space temperature continues to drop, warmup cycle (as described below) is actuated. When space temperature rises 10 degrees F, warmup terminates and fan stops.
2. Units with face and bypass dampers: face damper open, bypass damper closed. Heating coils valves operate as described below.

E. Warmup Modes (Optimal start schedule)

1. Upon startup, the AH unit first goes through a warmup mode. The supply fan shall start and run with outside dampers shut. After a 3 minute time delay, the system goes into a warmup mode depending on space temperature.
2. Space temperature below 68 degrees F warmup commences. Air discharge temperature is controlled by room temperature, subject to a maximum of 100 degrees F. Warmup terminates when room temperature has increased to 72 degrees F, subject to time delay as described below, before reverting to normal operation.
3. Provide an adjustable time delay to hold the system in warmup after reaching 72 F, for a preset time, before reverting to normal occupied mode. Adjust this delay based on observed need for thermal stability.

F. Occupied Summer (ambient temperature above 70 degrees F)

1. Outside and return air dampers shall modulate from a minimum of 20% outside air to maximum minimum value scheduled to maintain offset pressure differential.
2. Whenever associated exhaust fans GX-46, 47, 48, 49 or 50 are running, respective units outside air dampers shall go full open to maintain while still under control of space pressure differential offset.

G. Occupied Winter (ambient temperature below 70 degrees F)

1. Units without face and bypass dampers: Space sensor shall sequence heating coil control valve to maintain space temperature. Outside air and return air damper are under control of space pressurization offset.
2. Units with face and bypass dampers: Space sensor shall sequence heating coil control valve, face and bypass dampers and outside air dampers to maintain space temperature. Outside air and return air damper are under control of space pressurization offset.
3. Mixed air temperature above 35 degrees F: Face damper open, bypass damper closed and heating coil control valve modulates to maintain space setpoint. Mixed air temperature below 35 degrees F: Hot water valve goes to full open and face and bypass damper modulate to maintain space setpoint.

H. Provide Freezestat controls in each unit, as described in the general descriptions.

I. Occupied Heating or Cooling

1. Associated exhaust fans per HV unit shall be energized to run through the BAS system only when the building is in the occupied mode per the following schedule:

AIR HANDLING UNIT	EXHAUST FANS
HV-1	TX-12, GX-3
HV-2	TX-14, GX-6
HV-3	TX-15, GX-31
HV-4	TX-20, GX-12, 14
HV-5	TX-13, GX-13, 25

4.22 SEQUENCE OF OPERATIONS – HEAT RECOVERY UNITS (HRU1 and HRU2)

A. HRU units shall provide minimum ventilation air to respective AHU's served. If HRU value is not sufficient to maintain minimum then modulate main outside air damper to supplement.

B. Occupied Summer (ambient temperature above 70 degrees F)

1. Outside air damper shall open, heat exchanger bypass damper closed and exhaust and supply fan shall start after outside air damper proven open. Exhaust fan speed shall vary based on maintaining a negative offset as indicated on drawing in reference to totalized supply vav boxes of spaces served. Supply fan shall track exhaust fan to maintain scheduled offset.

2. If outside air temperature is above return air temperature, close outside air to heat recovery coil and open bypass damper.

C. Occupied Winter (ambient temperature below 70 degrees F)

1. Outside air damper shall open, heat exchanger bypass damper closed and exhaust and supply fan shall start after outside air damper proven open. Exhaust fan speed shall vary based on maintaining a negative offset as indicated on drawing in reference to totalized

supply vav boxes of spaces served. Supply fan shall track exhaust fan to maintain scheduled offset.

2. Outside air bypass dampers shall modulate based on heat exchanger exhaust air temperature to ensure unit leaving exhaust temp stays above 34 degrees F to prevent heat exchanger frosting if exhaust fan is operating.

3. Cold start up with outside air temperature below freeze stat setting of 38 degrees F, prior to starting of unit open hot water valve to flow water in coil to prevent nuisance freeze stat tripping while slowly ramping up speed of fan. Once system stabilize return hot water coil control to normal.

4. Preheat coil valve to modulate to maintain discharge temp of 50 deg F (adj).

D. HRU1 shall be interlocked with AHU1. Unit shall provide required exhaust to art classrooms.

E. HRU2 shall be interlocked with AHU4. Unit shall provide required exhaust to science classrooms.

F. BAS shall monitor supply air and exhaust air at units

4.23 SEQUENCE OF OPERATIONS – VARIABLE AIR VOLUME AIR HANDLING UNITS WITH ENERGY RECOVERY (AHU-3 and AHU-5)

A. When supply fan is shut down, relief fan is shut down, the outside and relief/spill dampers are shut tight, heating coil valve is controlled by air sensors immediately downstream of coil. (Provide not less than one sensor for each 8 sq. ft. of coil face). Upon a signal from the BAS system to start the outside air and relief air dampers shall open and start supply and exhaust air fans. Fans shall be controlled under specific mode of operation.

B. Hours of operation will be set at the building's central panel. Modes of operation will be:

1. Unoccupied cooling.
2. Unoccupied heating.
3. Cooldown or Warmup.
4. Occupied summer.
5. Occupied winter.

C. Unoccupied cooling (ambient temperature above 55 F)

1. Outdoor air dampers are closed, fans are stopped. Cooling and heating coil valves are shut.

D. Unoccupied heating (ambient temperature below 55 F)

1. Outside air dampers are closed. Fans are off. Cooling coil valves are shut. Heating coil valves are under control of sensors immediately downstream of coils shall modulate to maintain minimum inside casing temperature of 45 degrees F. When room temperature drops to 55 degrees F, radiant panels shall be first stage for heating and if further drop in space temp initiate warmup cycle (as described below) is actuated. When space temperature rises to 65 degrees F, warmup terminates and fan stops.

E. Cooldown or Warmup (Optimal schedule)

1. Prior to occupied operation (adjustable lead time), the supply and exhaust fan starts, outside and relief dampers open. After a 3 minute run time, the system reverts to a cooldown or warmup mode, depending upon temperature of return air.
2. If return air temperature is above 80, cooldown commences. Chilled water valve is modulated under control of return air temperature. Normal occupied cooling resumes after average room air temperature comes down to 75 degrees F.
3. If return air temperature is below 68 F, warmup commences. Return air sensor and/or average space temperature modulates the hot water control valve, subject to a high limit of 85 F discharge air temp. Warmup terminates when average space temperature has remained above 72 deg F for a preset time period (try 30 minutes initially). Adjust the time delay as needed to allow for thermal capacitance of building construction materials.

F. Unit shall operate with 100 % outside air and will not utilize CO2 control.

G. Occupied Summer (ambient temperature above 55 degrees F)

1. Temperature sensor immediately downstream of chilled water coil, as reset by a return air sensor and remote zone calling, through its controller (vav air handling units), shall control sequencing of chilled water coil control valve, (occupied mode) in response to air handling unit discharge temperature. Controller shall employ a dynamic self tuning algorithm.

2. Outside air damper shall open, heat exchanger bypass damper closed and supply fan and exhaust fan shall start under static pressure control (static pressure control for AHU-5 relief fan only. AHU-3 relief fan described below) after outside air and relief damper proven open.

3. As additional exhaust fans or units are energized unit exhaust fan shall reduce speed and eventually shut down. If space static cannot be maintained, is in excess of setpoint or space temperature continues to rise increase supply fan incrementally to 100% speed to allow more outside air.

4. If outside air temperature is above return air temperature, close outside air to heat recovery coil and open bypass damper.

H. Occupied Winter (ambient temperature below 70 degrees F)

1. The fan discharge sensor modulates variable outside air dampers, heat exchanger bypass dampers and heating coil control valve in sequence (with dead band between). Provide independent low limit controllers immediately downstream of heating coils, set at 45 degrees.

2. Outside air bypass dampers shall modulate based on heat exchanger exhaust air temperature to ensure unit leaving exhaust temp stays above 34 degrees F to prevent heat exchanger frosting if exhaust fan is operating.

3. Cold start up with outside air temperature below freeze stat setting of 38 degrees F, prior to starting of unit open hot water valve to flow water in coil to prevent nuisance freeze stat tripping while slowly ramping up speed of fan. Once system stabilize return hot water coil control to normal.

I. Provide Freezestat controls in each unit, as described in the general descriptions.

J. Occupied Heating or Cooling

1. Associated exhaust fans per AC unit shall be energized to run through the BAS system only when the building is in the occupied mode per the following schedule:

AIR HANDLING UNIT	EXHAUST FANS
AHU-3	GX-7, 10, TX-19

K. Supply and Relief Fan volume control.

1. A static pressure pickup sensor in the supply duct, referenced to outside air, located approximately two thirds down the main supply duct will, through a controller with P-I-D control algorithm, modulate a variable frequency fan speed controller, to maintain the static pressure setting. Provide a high limit pressure sensor with two setpoints. One setpoint to alarm above-normal pressures, the second setpoint, set higher, to shut the fan down.
2. AHU-5: control relief fan speed based on duct static pressure.
3. AHU-3 exhaust fan speed shall vary to maintain space pressure differential offset between supply to maintain space negative pressure with respect to ambient.
4. BAS shall monitor both fan airflow to verify cfm offset.

L. AHU-3 VAV Zone Control

1. A room temperature sensor sequences the radiation or radiant panel control valve (if exists), the reheat coil, and the air valve.
2. VAV air volume controller will have a maximum CFM and minimum CFM adjustment. Adjust maximum and minimum CFM to the cfm shown on the drawings.
3. For each reheat coil, provide a HW control valve and modulate it in sequence with the VAV damper.
4. During warmup, position VAV damper to maximum CFM with reheat valve closed.
5. Room temperature set points, operating temperature, air volume and status will be monitored at the central panel. Set points will be remotely adjustable.
6. Refer to additional vav/radiant control below.

M. AHU-5 VAV zone control

1. Refer to LX-1 control sequence below.
2. A room temperature sensor sequences the radiation or radiant panel control valve (if exists), the reheat coil, and the air valve.
3. VAV boxes with electric duct coils shall work in similar manner and shall only operate when the hot water system is not in service. When hot water is available the electric duct coils are locked out.

4.24 SEQUENCE OF OPERATIONS – RADIANT PANELS

A. Space sensor shall modulate radiant panel control valve based on occupancy schedule to maintain space setpoint.

B. Where radiant panel and VAV box(es) with heating coil(s) are controlled by same space sensor, space sensor shall first initiate radiant panel heating on and then upon further drop in space temperature and after VAV is at minimum flow, VAV heating coil control valve shall modulate to maintain space temperature.

C. If space temperature continues to drop sequence VAV box to 75% of max cooling flow (adj) ands modulate control valve.

4.25 SEQUENCE OF OPERATIONS – VARIABLE TEMPERATURE CONSTANT VOLUME AIR HANDLING UNITS (FAN COIL UNITS FC-8)

A. This unit is 100% outside air and controls a single zone by varying supply air temperature. Respective existing exhaust fan.

B. When supply fan is shut down, outside dampers are shut tight, freeze pumps are off, heating coil valve is controlled by air sensors immediately downstream of coil. (Provide a sensor for each coil section).

C. Hours of operation will be set at the building central panel. Modes of operation will be:

1. Unoccupied cooling.
2. Unoccupied heating.
3. Occupied summer.
4. Occupied winter.

D. Unoccupied cooling (ambient temperature above 55 degrees F):

1. Outdoor air dampers are closed, fan is stopped. Cooling and heating coil valves are closed.

E. Unoccupied heating (ambient temperature below 55 degrees F)

1. Outside air dampers are closed. Fan is off. Cooling coil valves are shut. Heating coil valves remain under control of sensors immediately downstream of coils.

F. Occupied Summer (ambient temperature above 55 degrees F)

1. A space temperature signal will modulate the cooling coil valve to maintain space setpoint. Discharge temperature sensor will prevent supply air temperature from dropping below preset miminum. Controller shall have P-I-D control algorithm.
2. Outside dampers full open.

G. Occupied Winter (ambient temperature below 55 degrees F)

1. Space sensor shall sequence heating coil control valve.
2. Provide independent low limit controllers immediately downstream of heating coils, set at 40 degrees to start hot water and chilled water freeze pump for freeze protection.

H. Provide Freezestat controls in each unit, as described in the general descriptions.

4.26 SEQUENCE OF OPERATIONS – CABINET UNIT AND UNIT HEATERS

A. Provide a room sensor for each unit heater to open 2 position control valve and cycle the unit fan to maintain the desired space temperature (setting range 45 - 75 F). Provide a strap-on thermostat to stop the fan whenever the hot water supply temperature drops below 120 degrees F. Submit an alarm if space temperature drops 5 deg. F below unoccupied set point.

4.27 SEQUENCE OF OPERATION – EXHAUST FANS GENERAL REQUIREMENTS

A. Each exhaust fan is to be started and stopped by the automatic control system, as shown on the drawings, as described herein, as directed by the Engineer. Upon startup exhaust fans respective motorized inlet and make up damper shall open. BAS shall monitor run times of fans whenever they are in operation.

B. Exhaust fans will be started and stopped either by interlocking to run with or in response to a signal from another unit, or by signal from the BAS control system, or by a room thermostat to limit space temperature rise, as appropriate.

C. Status shall be monitored by the BAS system and an alarm generated if the fan does not operate when initiated on or shuts down.

D. Associated transfer duct smoke dampers shall be interlocked to open when exhaust fans is started. If damper fails to open an alarm shall be generated.

E. For all manually controlled fans located within shops, BMS shall provide a permissive to allow fan to operate based on user defined occupancy schedules. Fan shall be turned off through BMS if left on during after hours.

4.28 SEQUENCE OF OPERATIONS – HVAC SHOP CHIMNEY AUTOMATION SYSTEM (GX-38)

A. A call for heat from one of the appliances will activate the chimney fan and releases the burner once an adequate, pre-set draft has been established. Fan shall modulate based on XTP sensor signal and fan controller.

4.29 SEQUENCE OF OPERATIONS – CHEMICAL STORAGE (GX-36, 5, 45)

A. Fan shall be started through BAS and run continuously. Initiate an alarm upon failure both at the BAS and an audible and visual alarm above chemical storage room door.

4.30 SEQUENCE OF OPERATIONS – ANNEX GENERAL STOARGE EXHAUST (GX-19, 20, 21 and 22)

A. Exhaust fans shall be started based on rise in space temperature above setpoint. Fans shall sequence on one at time in a cross ventilation fashion and respective inlet motorized damper shall open. De-energize fan, close damper and inlet damper after space setpoint satisfied.

4.31 SEQUENCE OF OPERATIONS – ELEVATOR MACHINE ROOM EXHAUST (GX-1 and GX-30)

A. Exhaust fans shall be started based on rise in space temperature above setpoint.

4.32 SEQUENCE OF OPERATIONS – ELECTRIC ROOM EXHAUST (GX-2, 4, 29, 39, 40)

A. Exhaust fans shall be started based on rise in space temperature above setpoint.

B. Fans with multiple sensors in fans serving more than a single space shall operate to satisfy each space sensor.

4.33 SEQUENCE OF OPERATIONS - TELECOM CLOSET AIR CONDITIONING

A. Space air conditioning units shall be started locally through unit supplied thermostats and controls to maintain space setpoint. Units controls shall sequence evaporator fan and refrigeration cycle to maintain space setpoint.

B. BAS shall monitor space temperature of all Telecommunications Closets and MDF room. Report an alarm if space temperature rises 2˚F above setpoint (72˚F adj).

4.34 SEQUENCE OF OPERATIONS – SHOP VENTILATION EXHAUST FANS (GX-46, GX-47, GX-48, GX-49, GX-50, GX-51, GX-52)

A. Fans shall operate based on rise in space setpoint (75˚F initially, adj.) automatically or if set into the hand position. When fan is called to run, open fan motorized damper and ceiling mounted make up air damper, start fan via inlet damper end switch.

B. GX-51 and/or GX-52 shall also be started if levels of carbon monoxide as measured by sensors located at 12" above finish floor sense levels on CO above 25 ppm. If temperature outside is below 35˚F, GX-51 and/or GX-52 make up air dampers shall remain closed and HV-6A, 6B and/or 7A, 7B shall go to high speed and 100% outside air for make up.

4.35 SEQUENCE OF OPERATIONS – HVAC PLASMA CUTTER (GX-27)

A. Exhaust fan shall be started/stopped via manual starter. Provide permissive to operate fan only during user specified occupancy schedule. If fan is run after specified times it will be commanded off by BAS unless extended schedule is implemented.

4.36 SEQUENCE OF OPERATIONS – SHOP WELDING EXHAUSTS (GX-9, GX-44, GX-32)

A. Exhaust fan shall be started/stopped via manual starter.

4.37 SEQUENCE OF OPERATIONS – AUTOBODY MIXING BOOTH

A. Exhaust fan shall be started/stopped through control interlock from spray booth mixing room with mixing room supply fan. Coordinate interface with booth supplier.

4.38 SEQUENCE OF OPERATIONS – SMALL PAINT SPRAY BOOTH

A. Exhaust fan shall be started/stopped via manual starter mounted on booth enclosure. Coordinate spray operation lockout with booth supplier. Interlock compressed air solenoid valve (supplied by others) with exhaust fan. Solenoid valve shall be closed when fan is off. Provide a local audible alarm with silence switch if fan fails when called to operate. Provide permissive to operate fan only during user specified occupancy schedule. If fan is run after specified times it will be commanded off by BAS unless extended schedule is implemented.

4.39 SEQUENCE OF OPERATIONS – AUTOMOTIVE VEHICLE EXHAUST (GX -35, GX-34 and GX-24)

A. Exhaust fan shall be started/stopped via manual starter. BMS shall provide relay to shut down fan if fan is left on after normal occupied hours.

4.40 SEQUENCE OF OPERATIONS – SCIENCE HOOD EXHAUST (LX-1 and LX-2)

A. Exhaust fans shall be started/stopped via remote start/stop buttons located on Lab Hood.

B. BAS to provide and monitor local lab hood airflow alarm and initiate a local and remote alarm upon loss of hood airflow when fan is commanded on. Provide sign indicating if "FAN STATUS LIGHT IS OFF DO NOT USE HOOD"

4.41 SEQUENCE OF OPERATIONS – PREP ROOM EXHAUST (GX-37A/B)

A. GX-37A/B shall operate when main air system AHU 5 is off. When AHU 5 is operating, GX-37A/B inlet damper shall be closed allowing 100% exhaust through main air system. When AHU 5 is off, EV-2 damper shall be closed allowing 100% exhaust through GX-37A/B.

B. EV-2 shall track supply VAV box to maintain a negative pressure with a 150cfm offset.

4.42 SEQUENCE OF OPERATIONS – SCIENCE ROOM PRESSURIZATION CONTROL (LX-1 & LX-2, AHU-5)

A. LX-1 and 2 are manually turned on as described above. AHU5 VFD's shall modulate fan speed in response to duct static pressure.

B. Supply and exhaust vav boxes shall track to maintain minimum airflow offsets in the Science Lab A228 A226 A225 A223 and Prep Rooms A227 and A224. For each space, provide a static pressure sensor to verify a negative offset with respect to corridor is achieved and adjust vav box airflows as required. Whenever the respective lab hood exhaust fans , LX-1 or 2, are on, the associated exhaust vav box airflow shall be reduced 770 cfm to match hood exhaust flow.

4.43 SEQUENCE OF OPERATIONS – CARPENTRY DUST COLLECTOR

A. Unit shall be started/stopped via manual start stop station located in carpentry office through manufacturer's remote control panel. BAS to allow permissive to operate dust collector based on programmed occupancy schedule. BAS contractor to provide ALL interconnecting control wiring to and from controller to dust collector. This shall include but not limited to filter differential monitoring, pulse blow down control, alarms, fan failure and as required to satisfy sequence of operations.

B. Provide manual summer/winter switch located inside building in office to set position of dust collector discharge dampers. Under most conditions, dampers shall be set to recirculate air. Provide spark arrestor sensor on the dust collector discharge to override switch that changes the position of the discharge bypass dampers to 100% exhaust no recirculation and initiate an alarm both inside of building and at BAS.

C. Provide differential pressure monitoring across filters to signal dirty filters.

4.44 SEQUENCE OF OPERATIONS – SANDING VACUUM SYSTEM (AEROVAC)

A. Unit shall be started manually at unit provided starter.

4.45 SEQUENCE OF OPERATIONS – LARGE SPRAY BOOTH

A. Start and stop on both booth exhaust fan and gas fired makeup air unit by manufacturers controls. BAS shall monitor run times.

4.46 SEQUENCE OF OPERATIONS – PREP BOOTH

A. Start and stop on booth exhaust fan by manufacturers controls. BAS shall monitor run times.

4.47 SEQUENCE OF OPERATIONS – PLUMBING SOLDERING EXHAUST (GX -23)

A. Exhaust fan shall be started/stopped via manual starter.

4.48 SEQUENCE OF OPERATIONS – FUEL OIL TANK (HVAC And Boiler)

A. BAS shall monitor output alarms generated by fuel oil monitoring panel.

4.49 SEQUENCE OF OPERATIONS – WASTE OIL TANK

A. BAS shall monitor output alarms generated by waste fuel oil monitoring panel.

4.50 SEQUENCE OF OPERATIONS – FUEL OIL TRANSFER PUMP (FOP-1)

A. Fuel oil pump shall be started remotely through building temperature control system based on occupancy schedule or manually through unit mounted HOA switch on unit control panel and operate continuously during school hours. BAS shall coordinate with shop emergency shut down controls provided under Division 26. Provide a 120 solenoid valve (normally closed) for each shop to close when respective emergency shut off is energized. BAS to monitor status of each emergency shut off panel through a set of NO or NC contacts to allow or deenergize fuel oil pumps. One or both of the panels shall be in a normal state to allow pumps to operate. If both panels are in off state pumps shall be locked out.

B. When the fuel oil pump operation fails to operate outside a normal shut down, generate a local audible alarm in both HVAC and Plumbing shops as well as an alarm to the BAS.

C. BAS shall monitor run times of each pump.

D. Upon failure of lead fuel oil pump BAS shall rotate to the lag pump. BAS to rotate pumps to equalize pun times.

4.51 SEQUENCE OF OPERATIONS – EMERGENCY GENERATOR

A. BAS to monitor status and alarms.

4.52 SEQUENCE OF OPERATIONS – CORRIDOR LIGHTING CONTROL

A. BAS shall control corridor lighting circuits, on/off, based on user defined occupancy schedules. Extend control from nine lighting control panels. Refer to Electrical drawings for locations. Each corridor shall be controlled independently.

B. Lighting panels include RP08, LP05, LP06, LP07, LP08, LP09, LP10 and LP11.

4.53 SEQUENCE OF OPERATIONS – SITE LIGHTING CONTROL

A. BAS shall control normal site lighting circuits, on/off, based on exterior photocell (provided by BMS contractor) for turning on and user defined occupancy schedules to turn off. Extend control from site lighting control panels or contactors. Refer to Electrical drawings for locations.

B. Electrical panels include LP05, LP06, ELP11 and LP10.

4.54 SEQUENCE OF OPERATIONS – SHOP AIR COMPRESSORS (Typical of 3)

A. System is configured with and intake penthouse with damper, an exhaust penthouse with set of right angle dampers and space sensor.

B. When compressor is off and space temp is satisfied, right angle dampers are closed to exterior, open to room and make up closed.

C. Dampers shall always be positioned to room with makeup air damper closed when space setpoint is satisfied. Rise in space temperature above setpoint, BMS shall modulate right angle dampers to maintain space temperatures and open make up air damper.

4.55 SEQUENCE OF OPERATIONS – HC-1

A. Connect HC-1 hot water valve to existing controls on existing RTU. This coil replaces the existing steam coil.

4.56 SEQUENCE OF OPERATIONS – EJECTOR PUMPS (SE-1 (boiler room) and SE-2 (plumbing shop pit)

A. BAS to monitor status and alarms.

END OF SECTION 230900

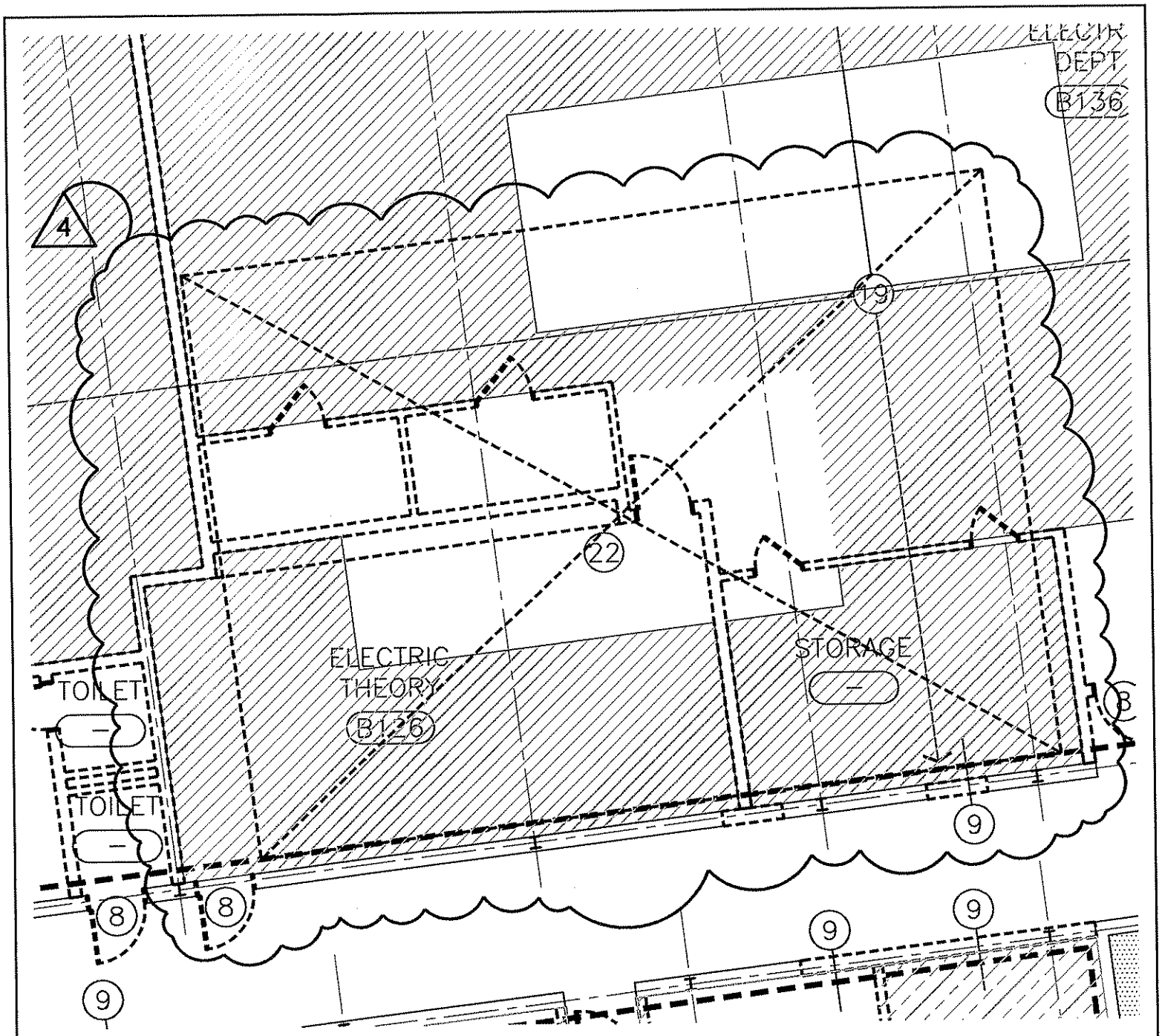

DEMOLITION KEYNOTES

22 REMOVE EXISTING SLAB

4

REFERENCE SHEET: D1.03
REFERENCE ADDENDUM: #4

TAI SOO KIM PARTNERS TAI SOO KIM 146 Wyllys Street Hartford, Connecticut Tel: (860) 547-1970 Fax: (860) 249-0695	JOB NAME/NUMBER H.C. WILCOX TECHNICAL HIGH SCHOOL/BI-RT-843 SCALE: 1/8" = 1'-0" DATE: 7/23/2010	TITLE FIRST FLOOR DEMOLITION PLAN – AREA B & C	DRAWING NO. SKA-1

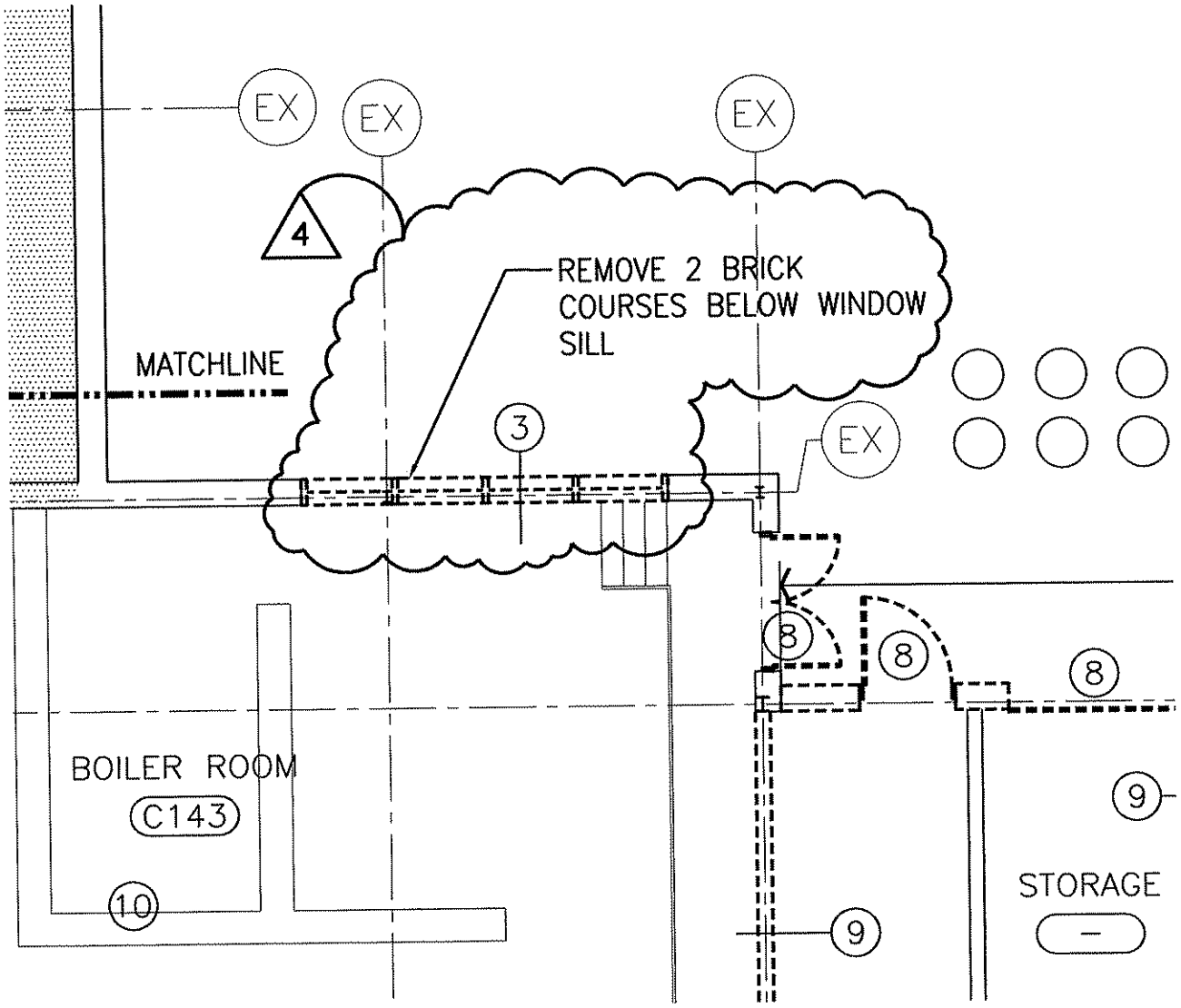

REFERENCE SHEET: D1.05
REFERENCE ADDENDUM: #4

TAI SOO KIM PARTNERS TAI SOO KIM 146 Wyllys Street Hartford, Connecticut Tel: (860) 547-1970 Fax: (860) 249-0695	JOB NAME/NUMBER H.C. WILCOX TECHNICAL HIGH SCHOOL/BI-RT-843 SCALE: 1/8" = 1'-0" DATE: 7/23/2010	TITLE FIRST FLOOR DEMOLITION PLAN – AREA C	DRAWING NO. SKA-2

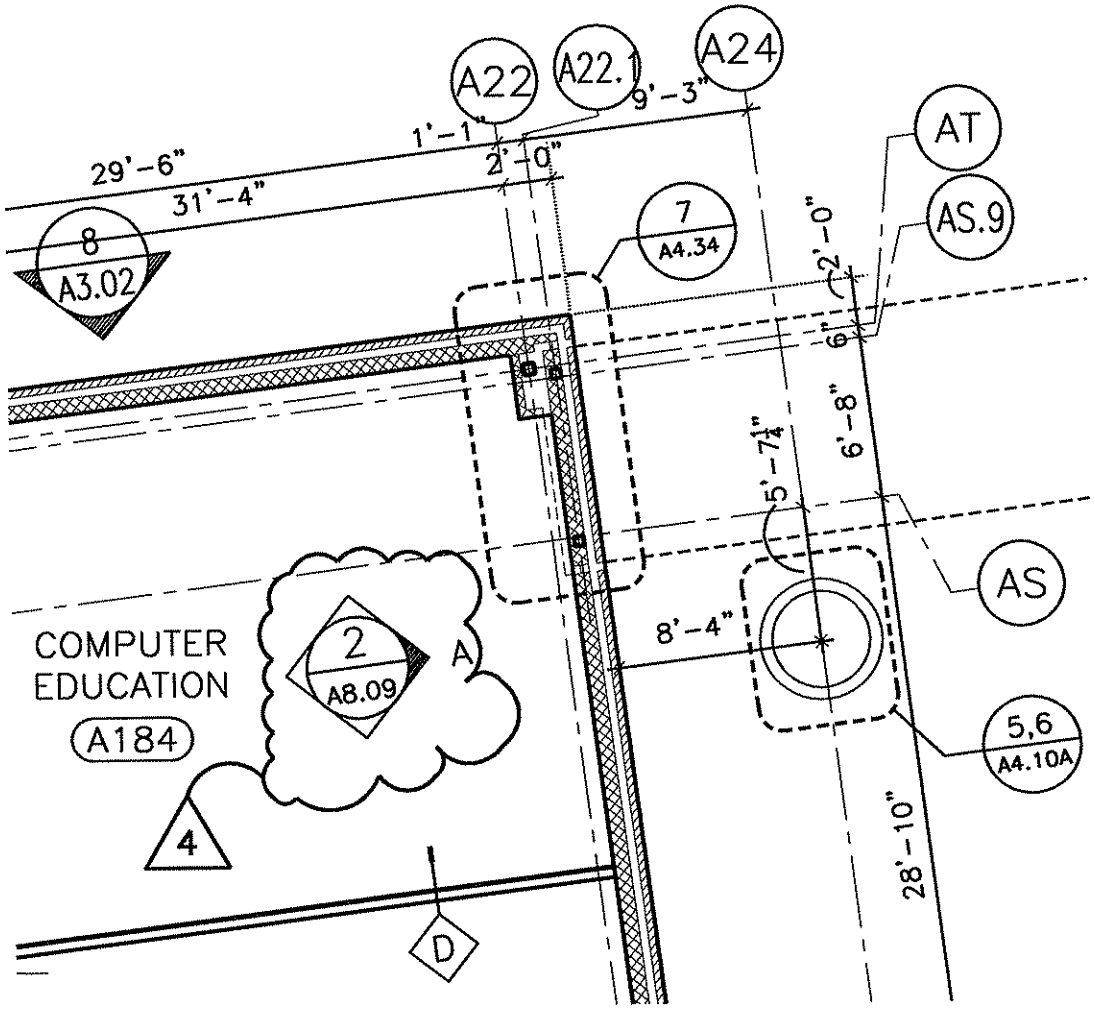

REFERENCE SHEET: A1.02
REFERENCE ADDENDUM: #4

TAI SOO KIM PARTNERS 146 Wyllys Street Hartford, Connecticut Tel: (860) 547-1970 Fax: (860) 249-0695	JOB NAME/NUMBER H.C. WILCOX TECHNICAL HIGH SCHOOL/BI-RT-843 SCALE: 1/8" = 1'-0" DATE: 7/23/2010	TITLE FIRST FLOOR PLAN AREA A	DRAWING NO. SKA-3

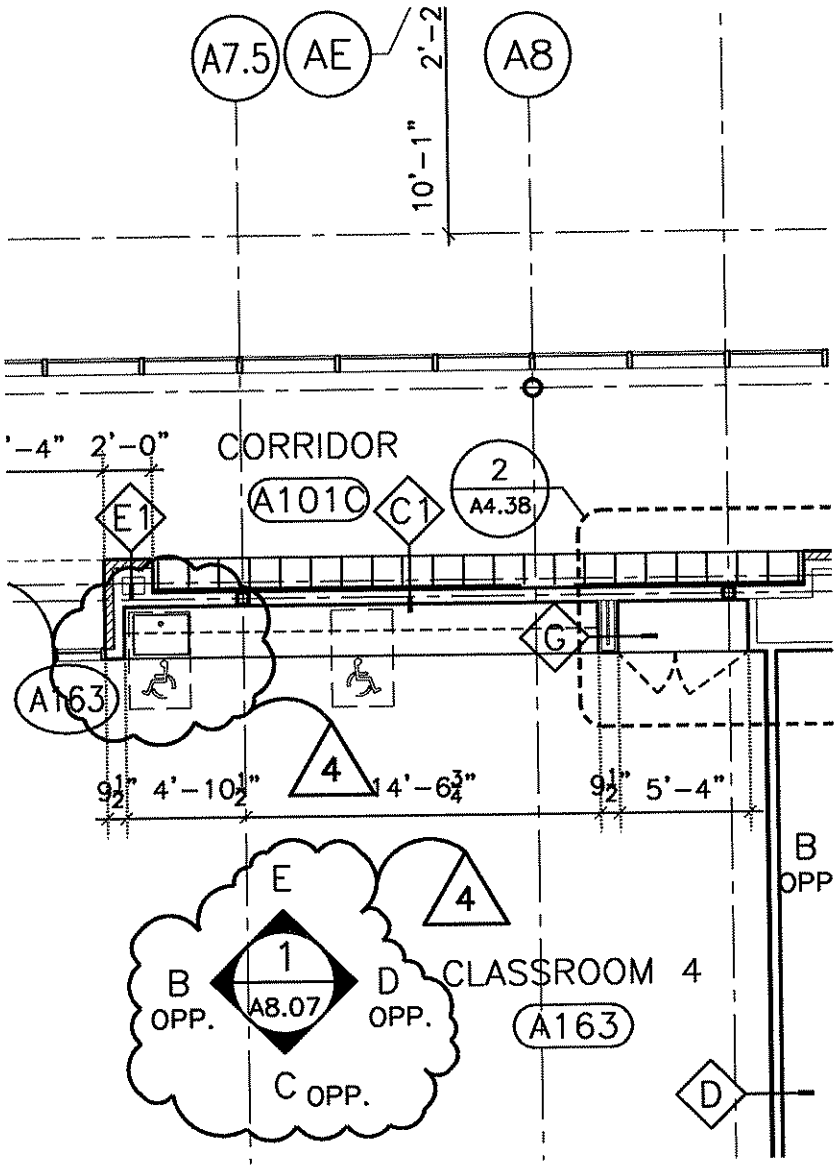

REFERENCE SHEET: A1.02
REFERENCE ADDENDUM: #4

TAI SOO KIM PARTNERS TAI SOO KIM 146 Wyllys Street Hartford, Connecticut Tel: (860) 547-1970 Fax: (860) 249-0695	JOB NAME/NUMBER H.C. WILCOX TECHNICAL HIGH SCHOOL/BI-RT-843 SCALE: 1/8" = 1'-0" DATE: 7/23/2010	TITLE FIRST FLOOR PLAN AREA A	DRAWING NO. SKA-4

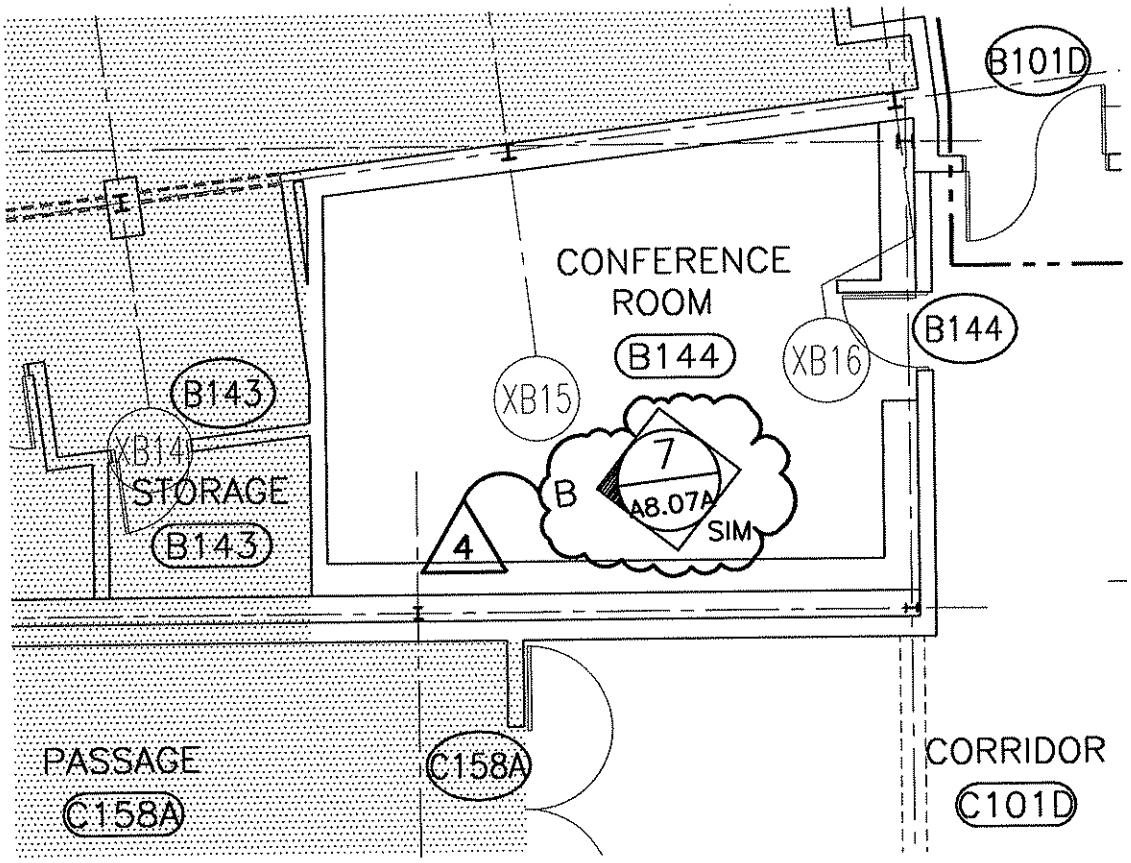

REFERENCE SHEET: A1.03
REFERENCE ADDENDUM: #4

TAI SOO KIM PARTNERS 146 Wyllys Street Hartford, Connecticut Tel: (860) 547-1970 Fax: (860) 249-0695	JOB NAME/NUMBER H.C. WILCOX TECHNICAL HIGH SCHOOL/BI-RT-843 SCALE: 1/8" = 1'-0" DATE: 7/23/2010	TITLE FIRST FLOOR PLAN AREA B & C	DRAWING NO. SKA-5

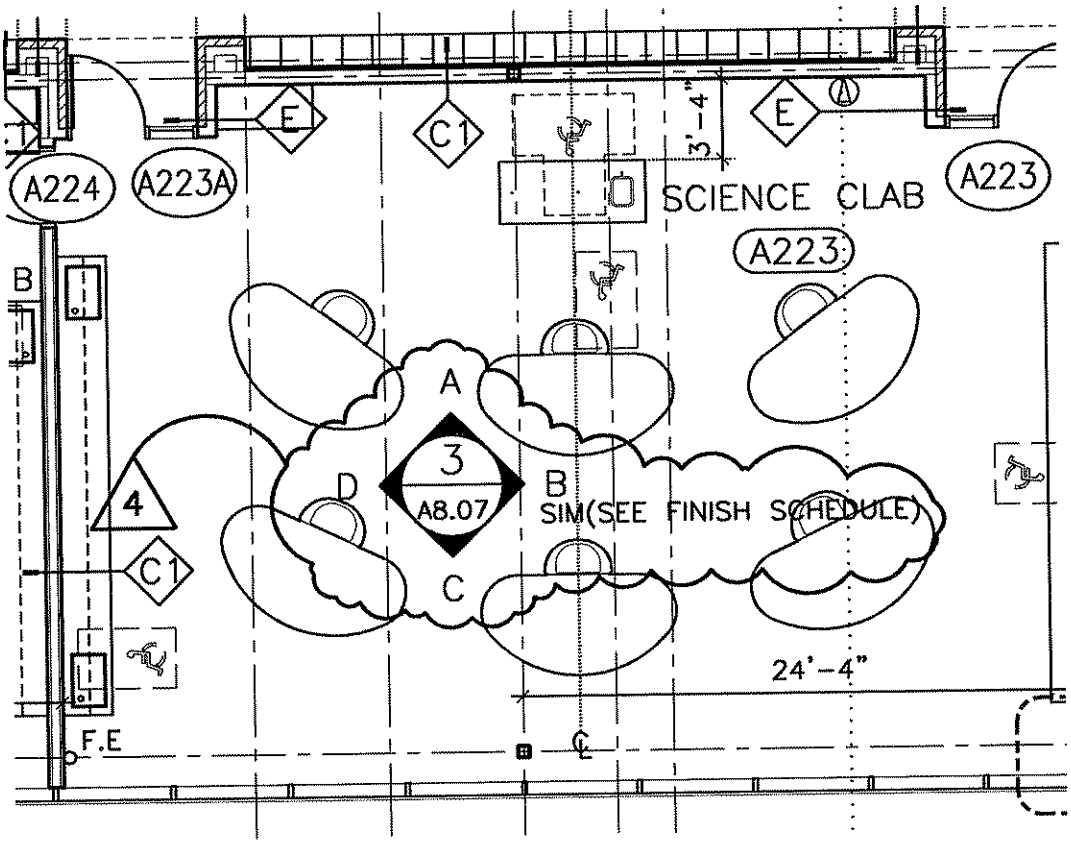

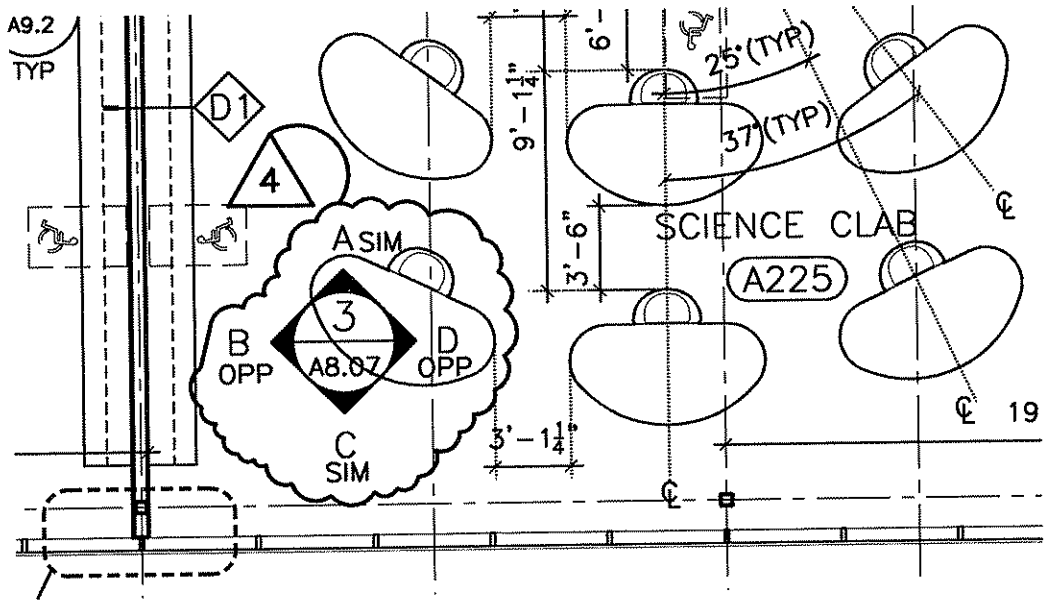

REFERENCE SHEET: A1.07
REFERENCE ADDENDUM: #4

TAI SOO KIM PARTNERS TAI SOO KIM 146 Wyllys Street Hartford, Connecticut Tel: (860) 547-1970 Fax: (860) 249-0695	JOB NAME/NUMBER H.C. WILCOX TECHNICAL HIGH SCHOOL/BI-RT-843 SCALE: 1/8" = 1'-0" DATE: 7/23/2010	TITLE SECOND FLOOR PLAN AREA A	DRAWING NO. SKA-6

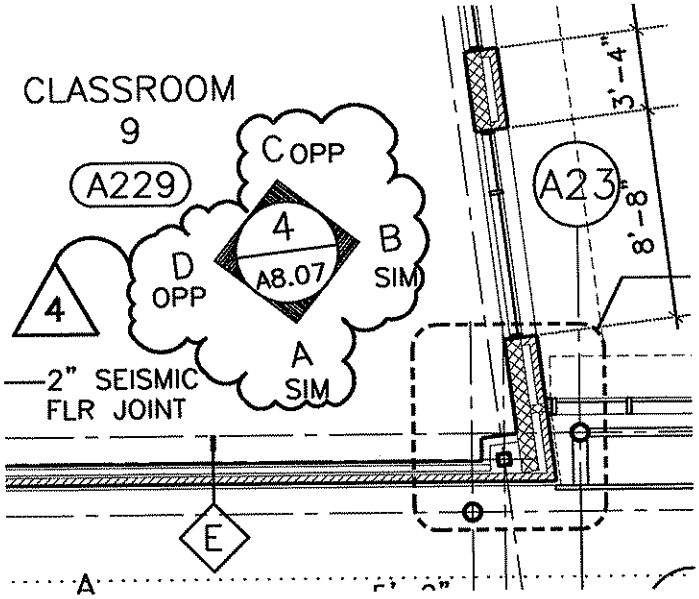

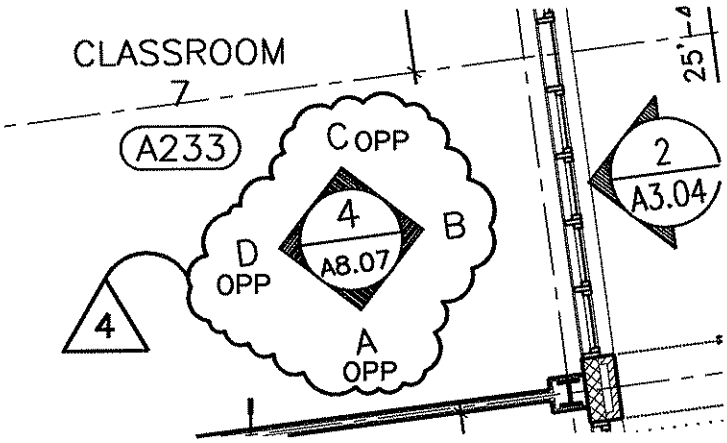

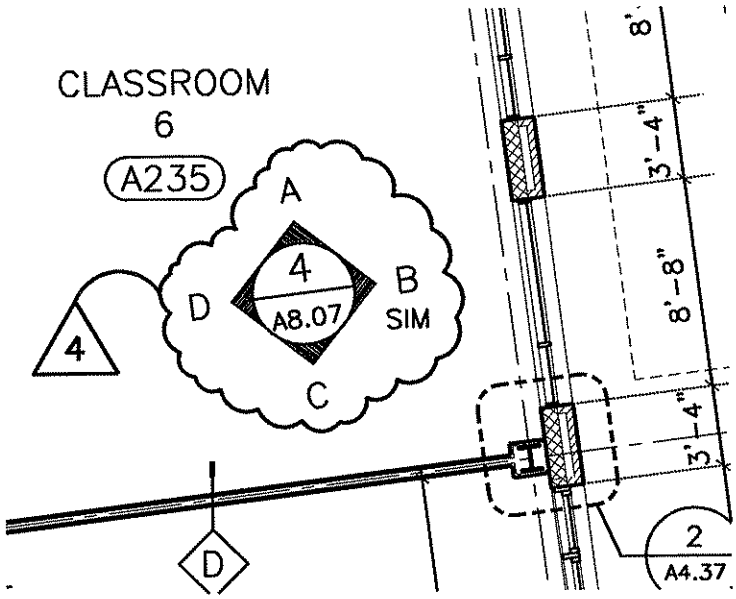

REFERENCE SHEET: A1.07
REFERENCE ADDENDUM: #4

TAI SOO KIM PARTNERS 146 Wyllys Street Hartford, Connecticut Tel: (860) 547-1970 Fax: (860) 249-0695	JOB NAME/NUMBER H.C. WILCOX TECHNICAL HIGH SCHOOL/BI-RT-843 SCALE: 1/8" = 1'-0" DATE: 7/23/2010	TITLE SECOND FLOOR PLAN AREA A	DRAWING NO. SKA-7

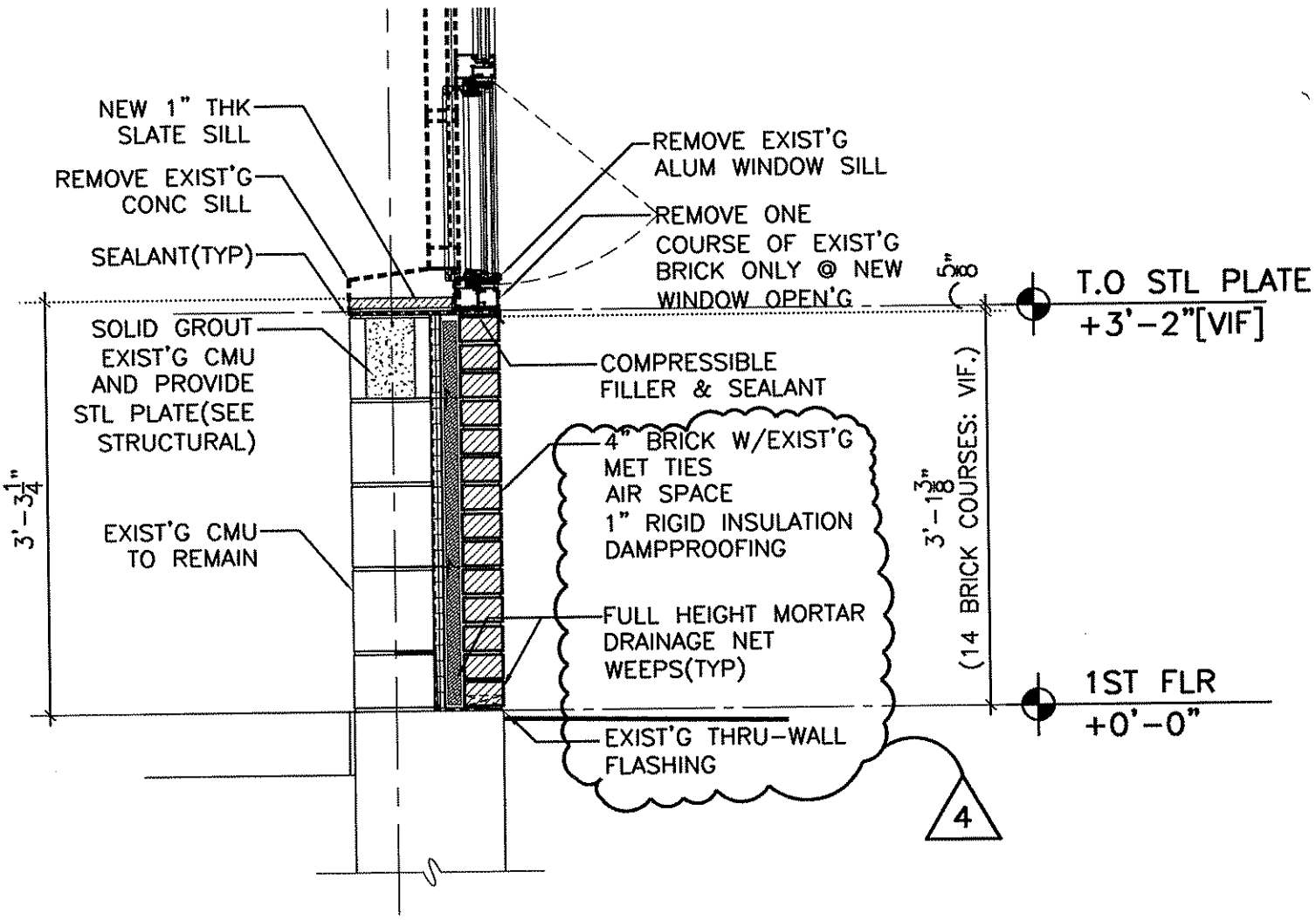

REFERENCE SHEET: 4/A4.10A
REFERENCE ADDENDUM: #4

TAI SOO KIM PARTNERS 146 Wyllys Street Hartford, Connecticut Tel: (860) 547-1970 Fax: (860) 249-0695	JOB NAME/NUMBER H.C. WILCOX TECHNICAL HIGH SCHOOL/BI-RT-843 SCALE: 3/4" = 1'-0" DATE: 7/23/2010	TITLE WALL SECTIONS	DRAWING NO. SKA-8

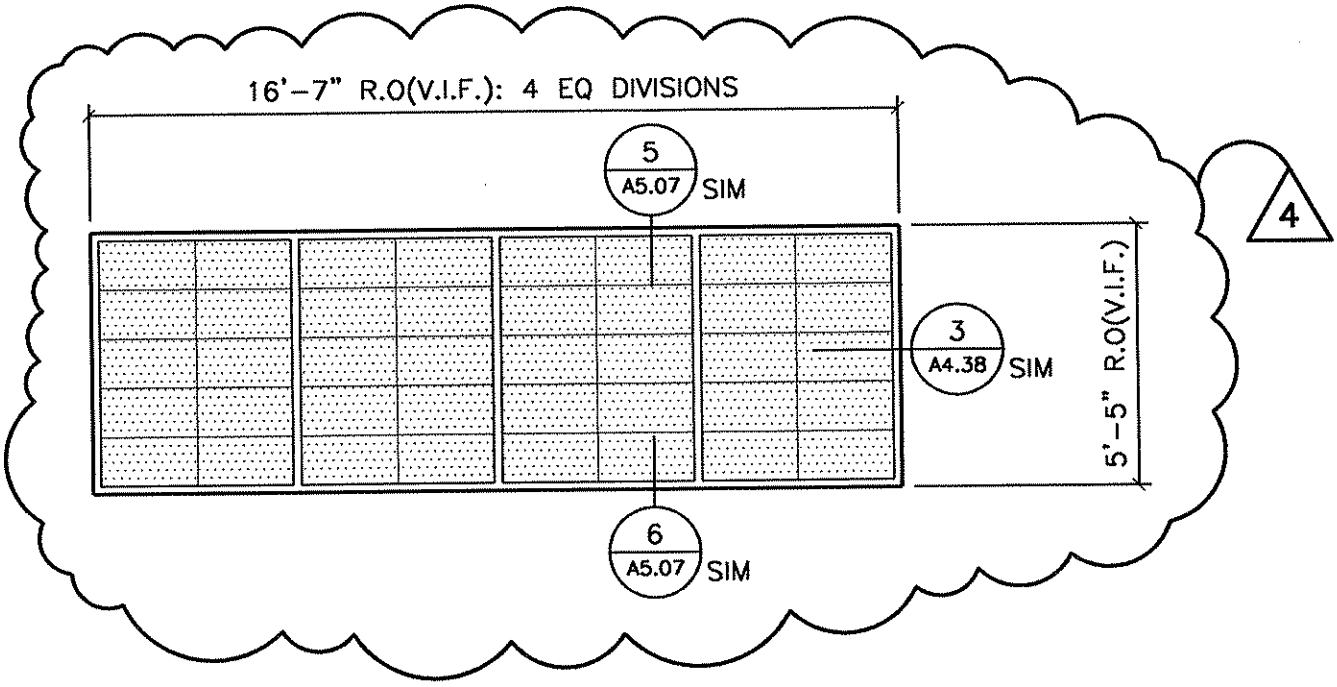

W9A SANDWICH WALL PANEL

REFERENCE SHEET: A5.01
REFERENCE ADDENDUM: #4

TAI SOO KIM PARTNERS TAI SOO KIM 146 Wyllys Street Hartford, Connecticut Tel: (860) 547-1970 Fax: (860) 249-0695	JOB NAME/NUMBER H.C. WILCOX TECHNICAL HIGH SCHOOL/BI-RT-843 SCALE: 1/4" = 1'-0" DATE: 7/23/2010	TITLE WINDOW TYPES	DRAWING NO. SKA-9

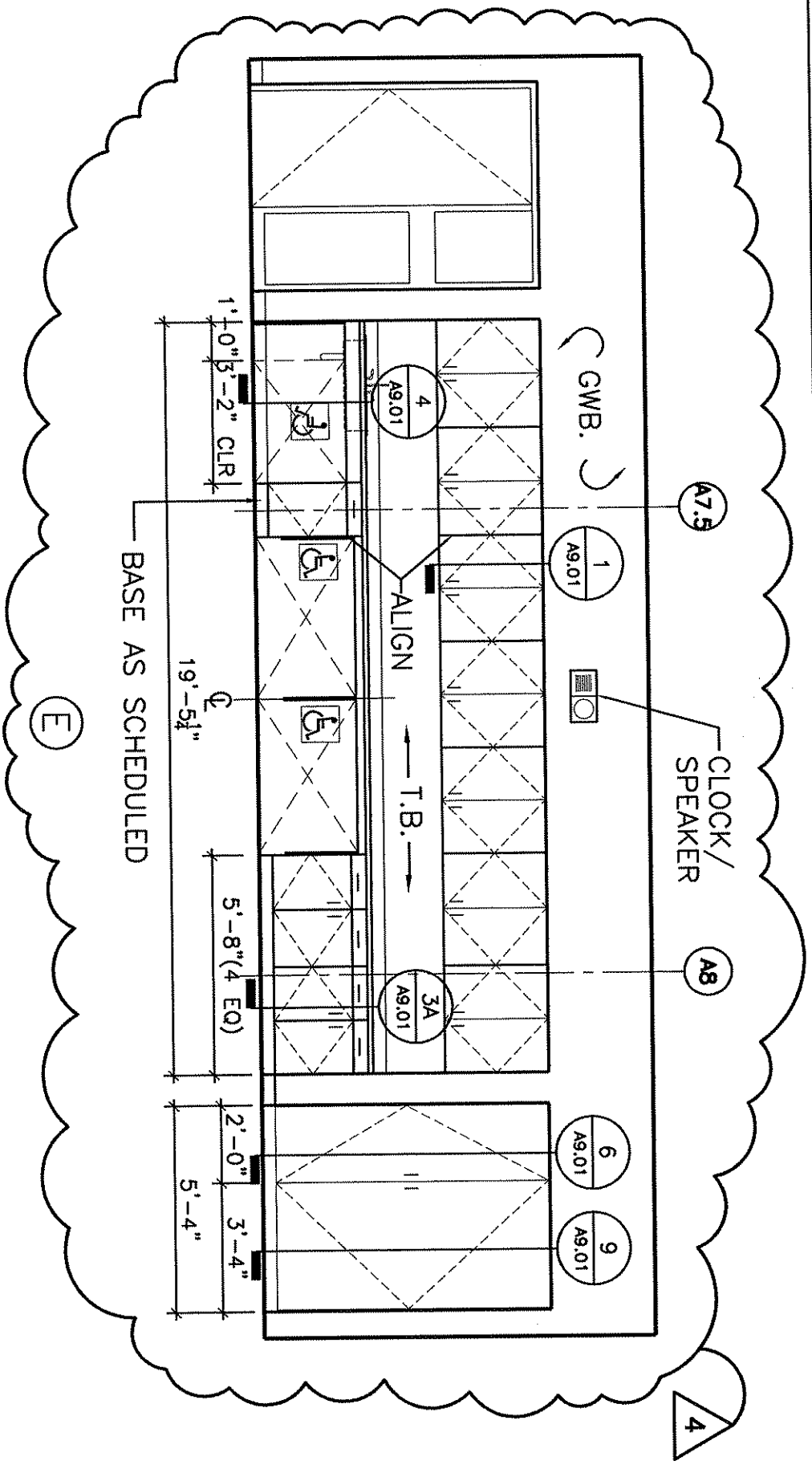

1 INTERIOR ELEVATIONS @ TYPICAL CLASSROOM(A163)

SCALE: 1/4"=1'-0"

REFERENCE SHEET: A8.07
REFERENCE ADDENDUM: #4

TAI SOO KIM PARTNERS 146 Wyllys Street Hartford, Connecticut Tel: (860) 547-1970 Fax: (860) 249-0695	JOB NAME/NUMBER H.C. WILCOX TECHNICAL HIGH SCHOOL/BI-RT-843 SCALE: 1/4" = 1'-0" DATE: 7/23/2010	TITLE INTERIOR ELEVATIONS -CLASSROOMS	DRAWING NO. SKA-10

ROOM FINISH SCHEDULE

RM. NO.	ROOM NAME	FLOOR	BASE			
			NORTH	EAST	SOUTH	WEST
B133	STORAGE	VCT	VINYL	VINYL	VINYL	VINYL
B170	COMPRESS ROOM	EXTG	–	–	–	–

4

REFERENCE SHEET: A10.02
REFERENCE ADDENDUM: #4

TAI SOO KIM PARTNERS
TAI SOO KIM
146 Wyllys Street
Hartford, Connecticut
Tel: (860) 547-1970
Fax: (860) 249-0695

JOB NAME/NUMBER
H.C. WILCOX TECHNICAL HIGH SCHOOL/BI-RT-843

SCALE:
N/A

DATE:
7/23/2010

TITLE
ROOM FINISH SCHEDULE

DRAWING NO.
SKA-11

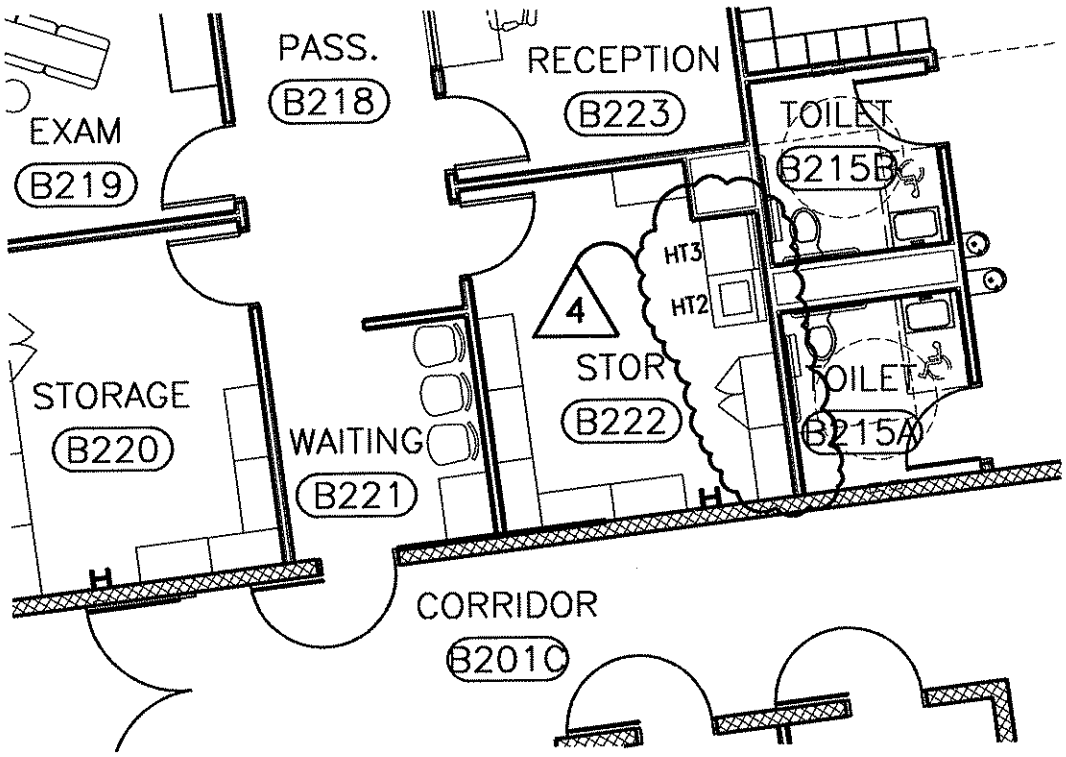

REFERENCE SHEET: A12.08
REFERENCE ADDENDUM: #4

TAI SOO KIM PARTNERS TAI SOO KIM 146 Wyllys Street Hartford, Connecticut Tel: (860) 547-1970 Fax: (860) 249-0695	JOB NAME/NUMBER H.C. WILCOX TECHNICAL HIGH SCHOOL/BI-RT-843 SCALE: 1/8" = 1'-0" DATE: 7/23/2010	TITLE SECOND FLOOR FURNITURE PLAN-AREA B	DRAWING NO. SKA-12

EQUIPMENT SCHEDULE

LOCATION	ITEM	NUMBER	QUANTITY	FURNISH		INSTALL		UTILITIES					POWER						HORSEPOWER	PHASE	REMARKS	CATALOG NUMBER
				G.C.	OWNER	G.C.	OWNER	H. W.	C. W.	AIR	GAS	OTHER	120 V	125 V	208 V	480 V	460 V	AMPS				
	HEALTH TECHNOLOGY (B216)																					
	MODULAR HEADWALL HT-1	HT1	4		X	X								X				20			PROVIDE POWER ONLY	
	WASHER	HT2	1		X		X	X	X				X					12				
	DRYER	HT3	1		X		X					X			X			22				

4

REFERENCE SHEET: A12.09
REFERENCE ADDENDUM: #4

TAI SOO KIM PARTNERS
TAI SOO KIM
146 Wyllys Street
Hartford, Connecticut
Tel: (860) 547-1970
Fax: (860) 249-0695

JOB NAME/NUMBER
H.C. WILCOX TECHNICAL HIGH SCHOOL/BI-RT-843

SCALE:
N/A

DATE:
7/23/2010

TITLE
EQUIPMENT SCHEDULE

DRAWING NO.
SKA-13

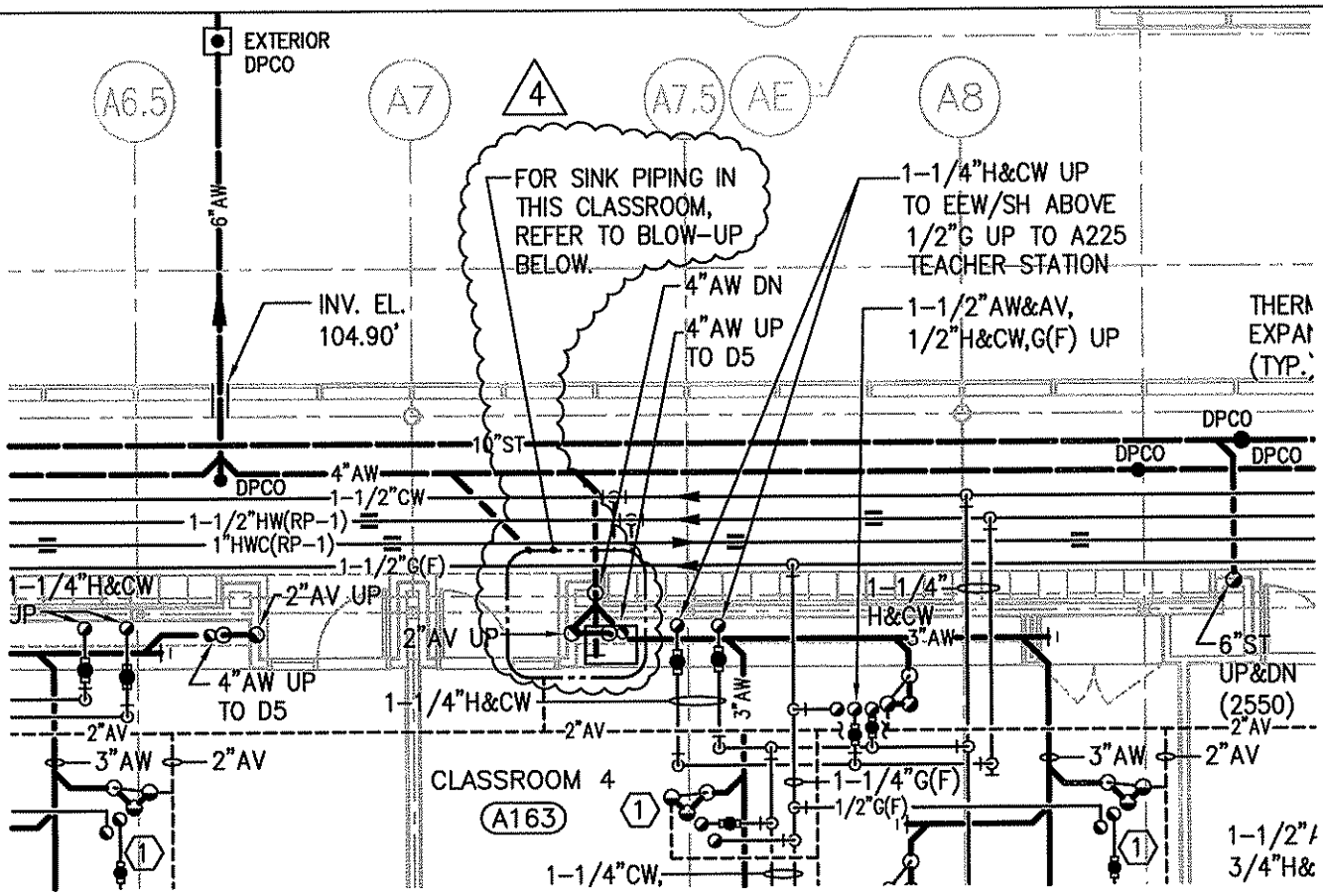

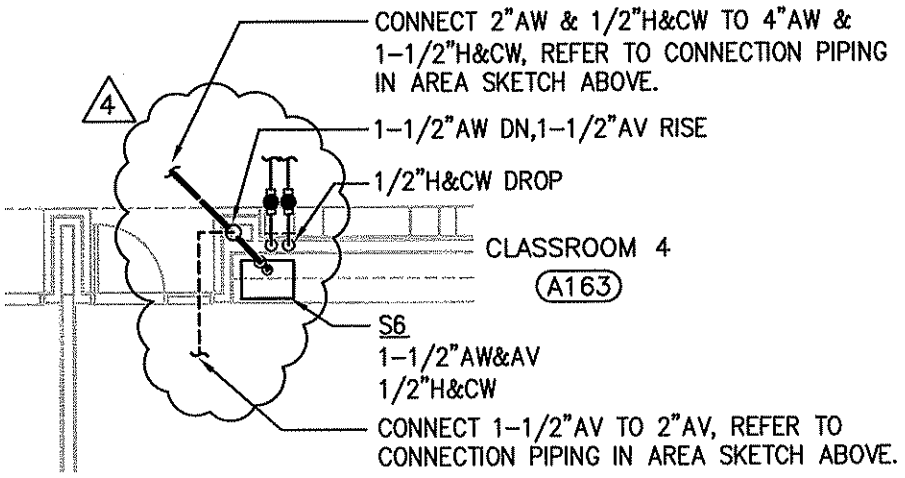

CLASSROOM 4 #163 CLASSROOM SINK PIPING

SCALE: 1/8" = 1'-0"

KOHLER RONAN, LLC
CONSULTING ENGINEERS
301 Main Street, Danbury, CT 06810
203.778.1017 F 203.778.1018
1370 Broadway, New York, NY 10018
212.695.2422 F 212.695.2423
www.kohlerronan.com
E-mail krce@kohlerronan.com

4 07/23/10 – ADDENDUM #4

PROJECT HC WILCOX/BI-RT-843 SKETCH NUMBER SKP-072310-1

PROJECT NUMBER 0532 DATE 07/23/10 REVISION TO SHEET NUMBER P1.02

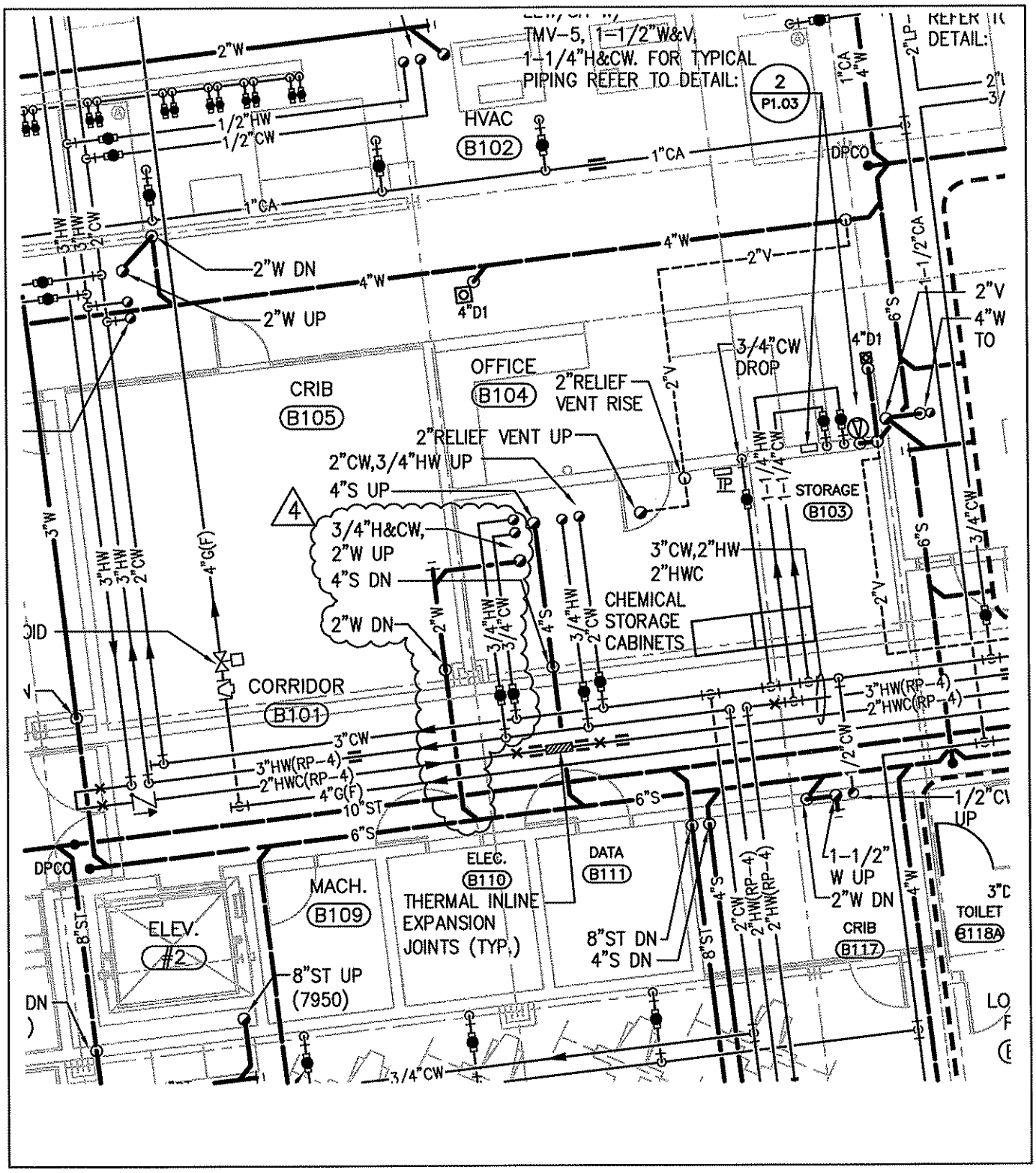

KOHLER RONAN, LLC
CONSULTING ENGINEERS

301 Main Street, Danbury, CT 06810
203.778.1017 F 203.778.1018

1370 Broadway, New York, NY 10018
212.695.2422 F 212.695.2423

www.kohlerronan.com
E-mail krce@kohlerronan.com

4 07/23/10 – ADDENDUM #4

PROJECT HC WILCOX/BI-RT-843 SKETCH NUMBER SKP-072310-2

PROJECT NUMBER 0532 DATE 7/23/10 REVISION TO SHEET NUMBER P1.03

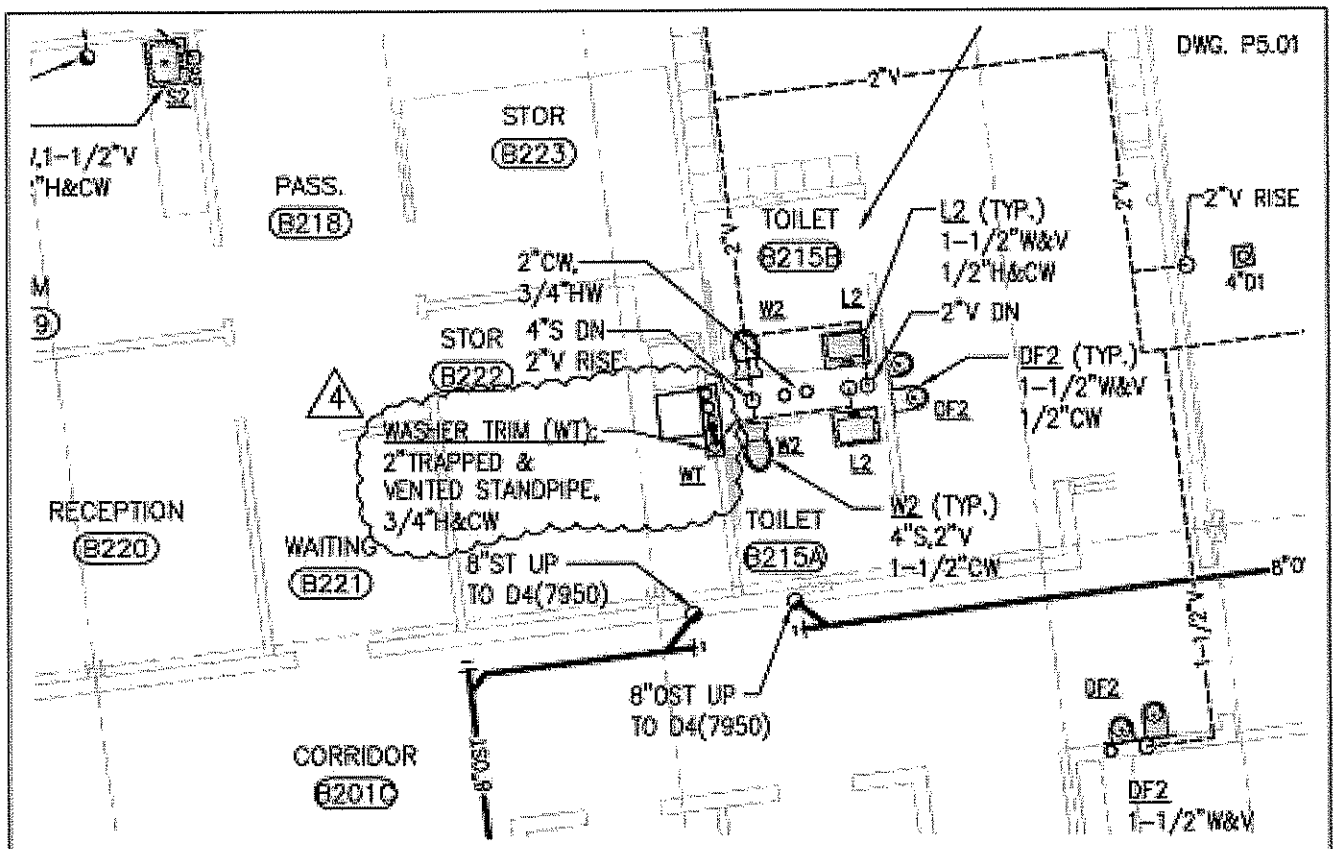

PLUMBING FIXTURE SCHEDULE

FIXTURE TAG	FIXTURE TYPE	FIXTURE MANUFACTURER MODEL, MODEL NO.	DESCRIPTION
WT	WASHER TRIM	SYMMONS W-602-X PPP INC. MM-500 MLB	RECESSED EQUIPMENT WITH ½" SUPPLY CONNECTIONS, 2" DRAIN CONNECTION AND VALVE.

		MINIMUM BRANCH SIZES				
SUPPLY SIZE	TRAP SIZE	WASTE/ SANITARY	VENT	COLD WATER	HOT WATER	REMARKS
1/2	--	2"	--	3/4"	3/4"	CONTRACTOR TO COORDINATE INSTALLATION OF WASHER TRIM BOX WITH WALL CONDITIONS & ARCHITECT

KOHLER RONAN, LLC
921 Main Street, Danbury, CT 06810
203.778.1017 F 203.778.1018
1370 Broadway, New York, NY 10018
212.685.3422 F 212.685.3423
www.kohlerronan.com
E-mail kroa@kohlerronan.com

4 07/23/10 – ADDENDUM #4

PROJECT HC WILCOX/BI-RT-843 SKETCH NUMBER SKP-072310-3

PROJECT NUMBER 0532 DATE 07/23/10 REVISION TO SHEET NUMBER P1.09

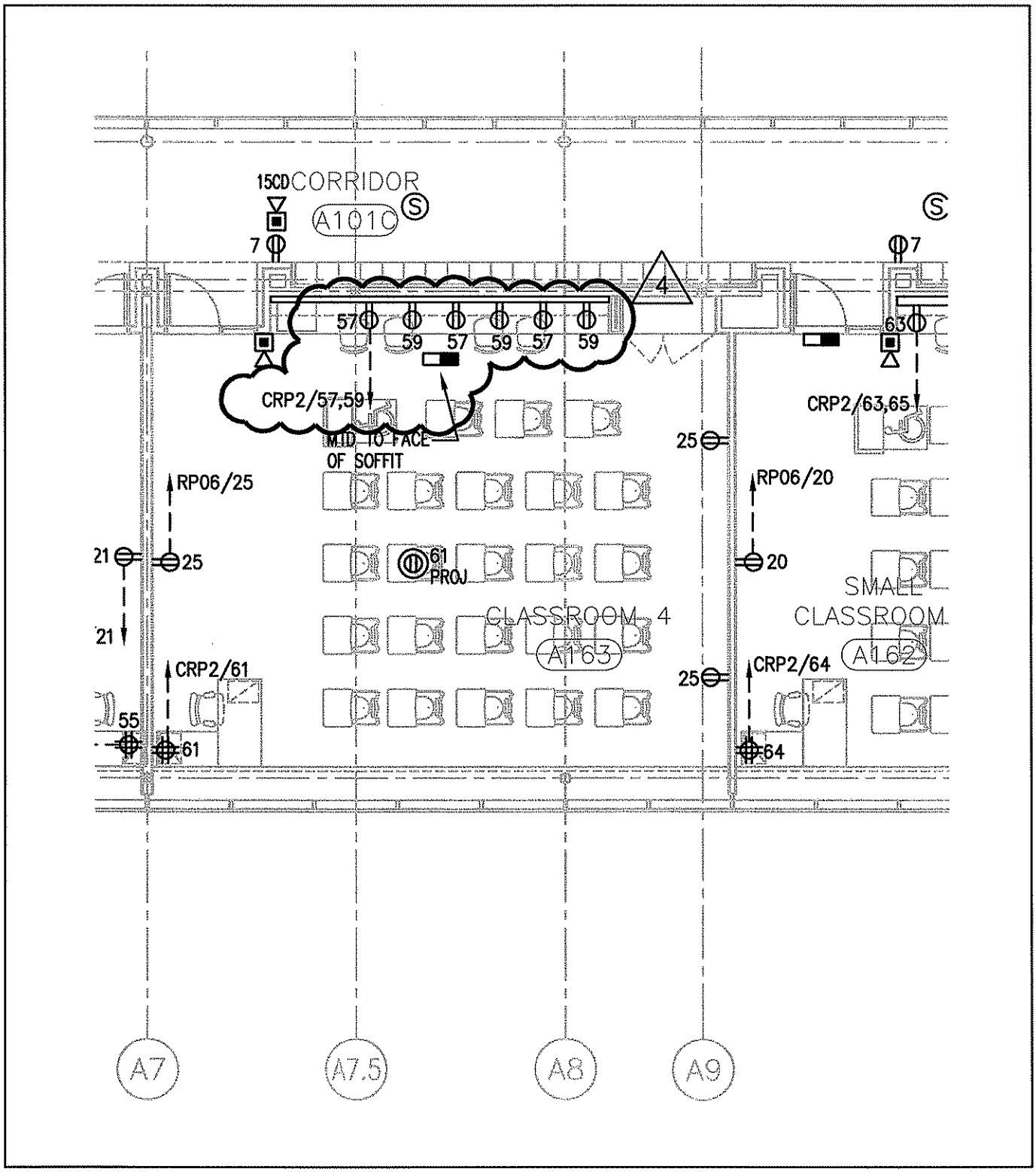

KOHLER RONAN, LLC
CONSULTING ENGINEERS

301 Main Street, Danbury, CT 06810
203.778.1017 F 203.778.1018

1370 Broadway, New York, NY 10018
212.695.2422 F 212.695.2423

www.kohlerronan.com
E-mail krca@kohlerronan.com

4 07/23/10 – ADDENDUM #4

PROJECT HC WILCOX/BI-RT-843 SKETCH NUMBER SKE-072310-1

PROJECT NUMBER 0532 DATE 7/23/10 REVISION TO SHEET NUMBER E1.02

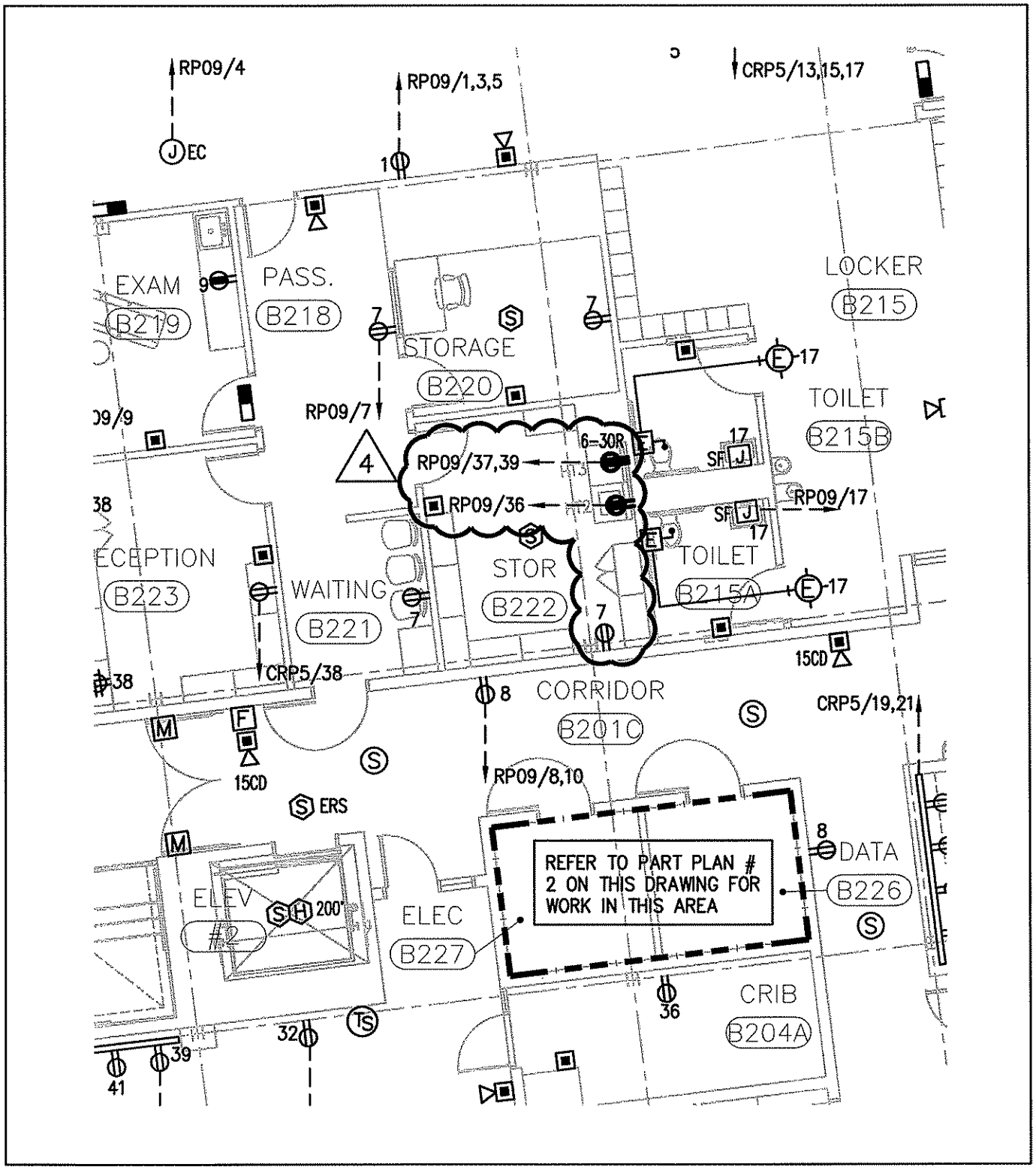

KOHLER RONAN, LLC
CONSULTING ENGINEERS
301 Main Street, Danbury, CT 06810
203.778.1017 F 203.778.1018
1370 Broadway, New York, NY 10018
212.695.2422 F 212.695.2423
www.kohlerronan.com
E-mail krce@kohlerronan.com

4 07/23/10 – ADDENDUM #4

PROJECT HC WILCOX/BI-RT-843 SKETCH NUMBER SKE-072310-2

PROJECT NUMBER 0532 DATE 7/23/10 REVISION TO SHEET NUMBER E1.09

120/208V, 3 PHASE, 4 WIRE
22,000 A.I.C.

RP09

1 150A MCB 225A BUS

	LOAD SERVED	WIRE & CONDUIT	TRIP	POLE	LOAD IN WATTS φA		φB		φC		POLE	TRIP	WIRE & CONDUIT	LOAD SERVED	
1	RECEPT. #B216	2 #12+G -3/4"C.	20	1	540	720					1	20	2 #12+G -3/4"C.	RECEPT. #B216	2
3	RECEPT. #B216	2 #12+G -3/4"C.	20	1			540	300			1	20	2 #12+G -3/4"C.	J.B.(EC) #B216	4
5	RECEPT. #B216	2 #12+G -3/4"C.	20	1					540	300	1	20	2 #12+G -3/4"C.	J.B.(EC) #B225	6
7	RECEPT. #B218	2 #12+G -3/4"C.	20	1	760	720					1	20	2 #12+G -3/4"C.	RECEPT. #B201C	8
9	RECEPT. #B219	2 #12+G -3/4"C.	20	1			540	720			1	20	2 #12+G -3/4"C.	RECEPT. #B201C	10
11	CALL FOR AID #B202B	2 #12+G -3/4"C.	20	1					400	500	1	20	2 #12+G -3/4"C.	CALL FOR AID #B201B	12
13	J.B.(EC) #B205A	2 #12+G -3/4"C.	20	1	300	324					1	20	2 #12+G -3/4"C.	AC-1 & RPT.	14
15	MODULAR HEADWALL	2 #12+G -3/4"C.	20	1			1080	720			1	20	2 #12+G -3/4"C.	RECEPTACLES (ROOF)	16
17	CALL FOR AID #B215A	2 #12+G -3/4"C.	20	1					400	720	1	20	2 #12+G -3/4"C.	RECEPTACLES (ROOF)	18
19	RECEPT #B214	2 #12+G -3/4"C.	20	1	720	1680					1	20	2 #12+G -3/4"C.	ACCU-1	20
21	TCP #B214	2 #12+G -3/4"C.	20	1			250	380			1	20	2 #12+G -3/4"C.	LIGHTS #STAIR B1	22
23	TX-10, TX-11	2 #12+G -3/4"C.	20	1					1176	1680	1	20	2 #12+G -3/4"C.	ACCU-1	24
25	RECEPT. #B217	2 #12+G -3/4"C.	20	1	720	540					1	20	2 #12+G -3/4"C.	RECEPT. #B203	26
27	RECEPT. #B211	2 #12+G -3/4"C.	20	1			720	540			1	20	2 #12+G -3/4"C.	RECEPT. #B212	28
29	J.B.(EC) #B212	2 #12+G -3/4"C.	20	1					300	720	1	20	2 #12+G -3/4"C.	RECEPT. #B213	30
31	RECEPT. #B202	2 #12+G -3/4"C.	20	1	540	540					1	20	2 #12+G -3/4"C.	RECEPT. #B202A	32
33	MODULAR HEADWALL	2 #12+G -3/4"C.	20	1			1080	1080			1	20	2 #12+G -3/4"C.	MODULAR HEADWALL	34
35	MODULAR HEADWALL	2 #12+G -3/4"C.	20	1					1080	1720	1	20	2 #12+G -3/4"C.	RECEPT. & TP #B214	36
37	DRYER #B222	2 #10+G -3/4"C.	30	2	2400	–					1	20	–	–	38
39							2400	–			1	20	–	–	40
41	–	–	20	1					–	–	1	20	–	–	42
	LOAD PER PHASE				10504		10350		9536						
(SURFACE MTD)		TOTAL =			30,390										

1

4

NO.	DATE	REVISION
1	072310	ADDENDUM #1

CLIENT
State of Connecticut Department of Public Works

PROJECT
H.C. Wilcox Technical High School

TITLE
SCHEDULES - ELECTRICAL

DRAWN BY: BEC
REV. TO DWG.: BLDG
SCALE: NONE
DATE: 072310
DRAWING
SKE-072310-3

Addendum #4

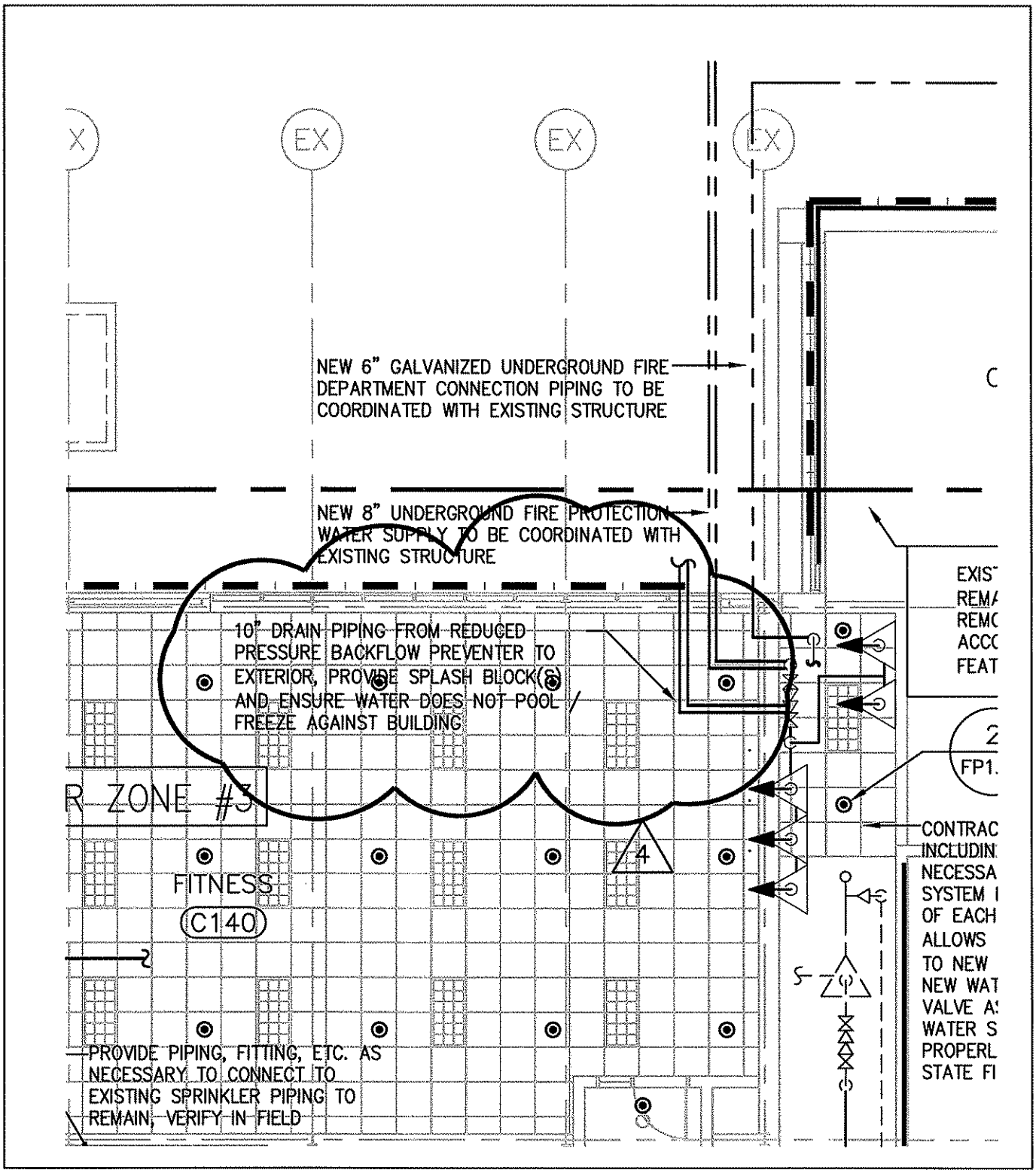

KOHLER RONAN, LLC
CONSULTING ENGINEERS
301 Main Street, Danbury, CT 06810
203.778.1017 F 203.778.1018
1370 Broadway, New York, NY 10018
212.695.2422 F 212.695.2423
www.kohlerronan.com
E-mail krce@kohlerronan.com

4 07/23/10 – ADDENDUM #4

PROJECT HC WILCOX/BI-RT-843 SKETCH NUMBER SKFP-072310-1

PROJECT NUMBER 0532 DATE 7/23/10 REVISION TO SHEET NUMBER FP1.05

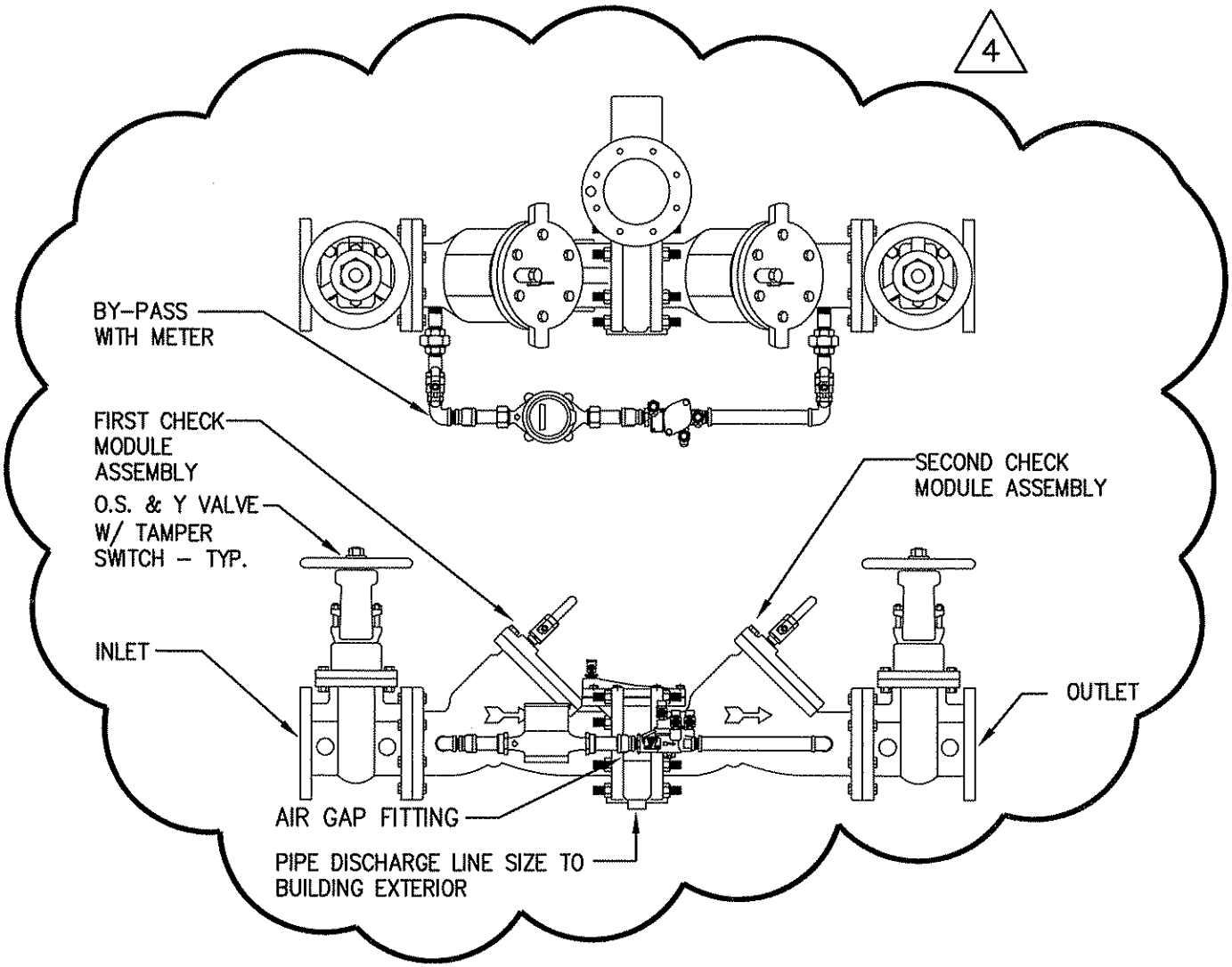

3 FP3.00 HORIZONTAL REDUCED PRESSURE BACKFLOW ASSEMBLY

NOT TO SCALE

KOHLER RONAN, LLC
CONSULTING ENGINEERS

301 Main Street, Danbury, CT 06810
203.778.1017 F 203.778.1018

1370 Broadway, New York, NY 10018
212.695.2422 F 212.695.2423

www.kohlerronan.com
E-mail krce@kohlerronan.com

4 07/23/10 - ADDENDUM #4

PROJECT HC WILCOX/BI-RT-843 SKETCH NUMBER SKFP-072310-2

PROJECT NUMBER 0532 DATE 7/23/10 REVISION TO SHEET NUMBER FP3.00

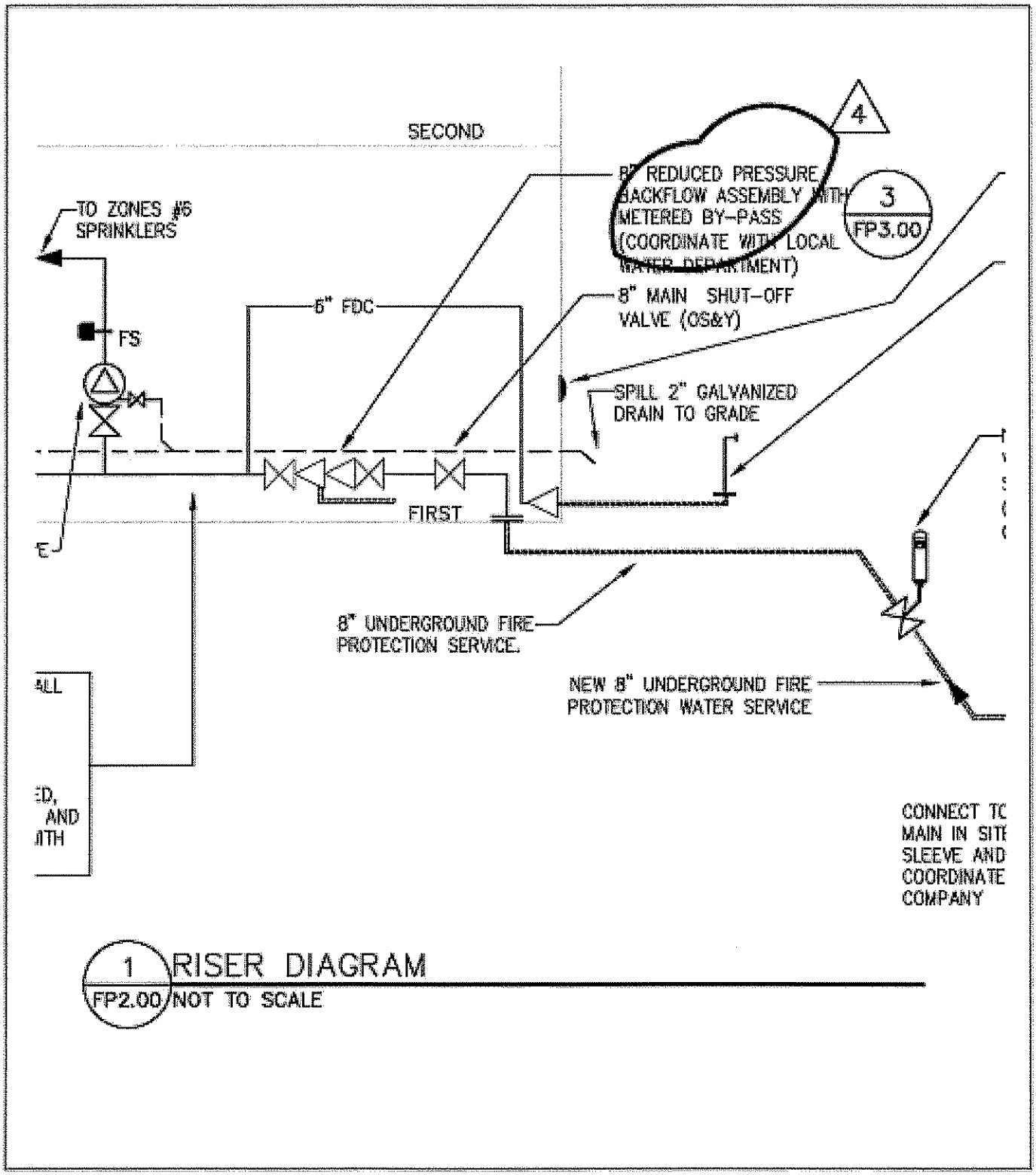

KOHLER KONAN, LLC
321 Main Street, Danbury, CT 06810
203.778.1217 F 203.778.1018
1370 Broadway, New York, NY 10018
212.695.3422 F 212.695.3423
www.kohlerkonan.com
E-mail: kmc@kohlerkonan.com

4 07/23/10 – ADDENDUM #4

PROJECT HC WILCOX/BI-RT-843 SKETCH NUMBER SKFP-072310-3

PROJECT NUMBER 0532 DATE 7/23/10 REVISION TO SHEET NUMBER FP2.00

ADDITIONS AND RENOVATIONS
HC WILCOX REGIONAL VOCATIONAL TECHNICAL SCHOOL
MERIDEN, CONNECTICUT
PROJECT: BI-RT- 843

BID OPENING	**1:00 P.M.**	**July 7, 2010**
ADDENDUM NUMBER 3	**DATE OF ADDENDUM**	**June 4, 2010**

The following clarifications are applicable to drawings and specifications for the project referenced above.

Item 1

Section 00 11 16, Invitation to Bid, the Pre-bid Conference Date has been postponed. The Pre-bid Conference Date will be determined at a later date and in a subsequent addendum.

Item 2

Section 00 11 16, Invitation to Bid, the Bid Opening Date has been postponed. The Bid Opening Date will be determined at a later date and in a subsequent addendum.

All questions must be in writing (not phone or e-mail) and must be forwarded to the consulting Architect/Engineer (Tia Soo Kim Partner, LLC - 860-249-0695) with copies sent to the DPW Project Manager (Barbara Cosgrove - 860-713-7264).

End of Addendum Number THREE

Gail Blythe

Gail Blythe, Associate Fiscal Administrative Officer
Department of Public Works

ADDITIONS AND RENOVATIONS
HC WILCOX REGIONAL VOCATIONAL TECHNICAL SCHOOL
MERIDEN, CONNECTICUT
PROJECT: BI-RT- 843

BID OPENING	**1:00 P.M.**	**JULY 7, 2010**
ADDENDUM NUMBER 2	**DATE OF ADDENDUM**	**May 25, 2010**

The following clarifications are applicable to drawings and specifications for the project referenced above.

Item 1

Section 00 11 16, Invitation to Bid, the Plans and Specifications Ready Date has been postponed at this time, the status of distribution will be determined at a later date and in a subsequent addendum.

All questions must be in writing (not phone or e-mail) and must be forwarded to the consulting Architect/Engineer (Tia Soo Kim Partner, LLC - 860-249-0695) with copies sent to the DPW Project Manager (Barbara Cosgrove - 860-713-7264).

End of Addendum Number TWO

Barbara Bergeron, Associate Fiscal Administrative Officer
Department of Public Works

ADDITIONS AND RENOVATIONS
HC WILCOX REGIONAL VOCATIONAL TECHNICAL SCHOOL
MERIDEN, CONNECTICUT
PROJECT: BI-RT- 843

BID OPENING	**1:00 P.M.**	**JULY 7, 2010**
ADDENDUM NUMBER 1	**DATE OF ADDENDUM**	**MAY21, 2010**

The following clarifications are applicable to drawings and specifications for the project referenced above.

Item 1

Section 00 11 16, Invitation to Bid, the **Pre-Bid Conference** date is inaccurately stated in this Section, the correct date is Thursday, June 10, 2010.

End of Addendum Number One

Barbara Bergeron, Associate Fiscal Administrative officer
Department of Public Works

INVITATION TO BID

THRESHOLD BUILDING

FOR PROJECTS ESTIMATED TO COST MORE THAN $500,000.00

ADV. NO.: 10-28 ADV. DATE: May 21, 2010

SEALED BIDS **FROM CONTRACTORS WHO HAVE BEEN PREQUALIFIED IN THE DAS CLASSIFICATION NOTED BELOW** SHALL BE ADDRESSED TO THE DEPARTMENT OF PUBLIC WORKS - STATE OF CONNECTICUT FOR:

Project Title:	Additions and Renovations HC Wilcox Regional Vocational Technical School 298 Oregon Road Meriden, Connecticut
Project Number:	**BI-RT-843**
DAS Classification:	Group B General Building Classification
Special Requirement:	N/A
Cost Estimate Range:	$50,000,000. – $52,000,000.
Plans & Specs Ready Date:	May 26, 2010
A NON-REFUNDABLE FEE OF PER SET IS REQUIRED	$ 415.00 **Checks** should be made payable to "**Treasurer, State Of Connecticut**" and must include the prospective bidder's correct mailing address, telephone and fax numbers of where **addendum**(a) should be submitted. **USE A SEPARATE CHECK FOR EACH PROJECT**.
Examination or Purchase of Plans & Specs	Plans and specifications are available during the hours of 8:00 A.M. to 5:00 PM (Monday – Friday) and must be ordered from **Joseph Merritt, 650 Franklin Avenue, Hartford, CT 06114. Please phone Joseph Merritt when planning to purchase a complete set at 860-296-2500 on or after March 31, 2010.** Checks should be made payable to **"TREASURER, STATE of CONNECTICUT"** and must include the prospective bidder's correct mailing address, telephone and fax numbers of where addendum(a) should be submitted. **USE A SEPARATE CHECK FOR EACH PROJECT.**
Pre-Bid Conference:	All prospective bidders are required to attend a **MANDATORY** Pre-Bid Conference
Pre-Bid Conference **Time**	to be held AT 9:30 AM
Pre-Bid Conference **Date**	ON Thursday June 8, 2010
Pre-Bid Conference **Location**	AT Wilcox Technical High School, 298 Oregon Road, Meriden, CT, Tiered Lecture Hall
Pre-Bid Conference **Registration**	All prospective bidders are required to *properly* register. *Proper* registration means that the attendee has *signed* his or her name to

	the **official roster** and *listed* the name and address of the company he or she represents on the official roster no later than the designated **start time** of the pre-bid conference. **No** attendee will be allowed to register *after* the advertised start time of the pre-bid conference. **Bids** submitted by contractors who have *not properly* registered and attended the pre-bid conference shall be *rejected* as **non-responsive**.
Pre-Bid Conference **Contact**	Joe Glorioso 203-238-6260 x5272
BID OPENING DATE:	**July 7, 2010**
Receipt of Bid Package	Bids will be received at the **State Office Building, 165 Capitol Avenue, Hartford**, **CT, 06106** in **Room No. G-36** UNTIL **1:00** P.M. on the date shown **above** and thereafter publicly opened and read aloud in **Room No. G-32.**
Bid Results:	Bid results are posted on the **DPW Website** in approximately two (2) days after the bid opening date.
Set-Aside Participation	25%
Including MBE/WBE	6.25%
Gift And Campaign Contribution Certification	If awarded the subject contract and the contract has a value of **$50,000** or more the contractor will be required to sign and submit, at the time of contract execution, a **Gift And Campaign Contribution Certification**. See the DPW home page, **http://www.ct.gov/dpw**, click on **Affidavits**. For the purposes of signing the Certification, the "date DPW began planning" the subject project or services is such date noted below.
Date DPW Began Planning the Subject Project:	9/23/04
Summary and Affidavit Regarding State Ethics	Any one seeking a contract with a value of more than $500,000 shall provide with their **bid** an **Ethics Affidavit** *located* at CT **DPW Website** (**www.ct.gov/dpw**). Failure to provide this affidavit with the bid proposal shall result in rejection of the bid.
Bid Security	As **security**, *each* bid must be accompanied by a CERTIFIED CHECK made payable to "**Treasurer, State of Connecticut**," or the bid must be accompanied by a BID BOND, in the form required by the awarding authority and having surety thereto such Surety Company or Companies as are authorized to do business in this State and/or accepted by the Commissioner of the Department of Public Works for an amount not less than **10%** of the bid.
Bidders are advised that ***both*** the DEPARTMENT OF ADMINISTRATIVE SERVICES PREQUALIFICATION **CERTIFICATE** and **UPDATE STATEMENT** **must** accompany the ***bid*** proposal for projects *estimated* to *exceed* Five Hundred Thousand Dollars ($500,000.00) (C.G.S. 4b-91 as amended). ***Failure to supply them with the bid will result in rejection of the bid***	
Department of Administrative Services (DAS) **Contractor Prequalification Program:** **http://www.das.state.ct.us/busopp.asp**	
To access Executive Orders: **http://www.ct.gov/governorrell/cwp/browse.asp?a=1719&bc=0&c=18433**	

To access the Department of Public Works Web Site: http://www.ct.gov/dpw

Performance and **Labor and Material Bonds** to be furnished by the bidder awarded the contract shall be an amount not less than 100% of the contract price.

The Commissioner reserves the right to do any of the following without liability, including but not limited to: (a) waive technical defects in the bid proposal as he or she deems best for the interest of the State; (b) negotiate with a contractor in accordance with Connecticut General Statutes Section 4b-91;(c) reject any or all bids; (d) cancel the award or execution of any contract prior to the issuance of the "Notice To Proceed;" and, (e) advertise for new bids.

Nonresident contractors: At the time of contract signing a certificate from the Commissioner of Revenue Services must be provided which evidences that C.G.S. 12-430 for non-resident contractors has been met. For details call the Department of Revenue Services at (860) 541-3280, ext. 7.

EXECUTIVE ORDERS:

The Contract is subject to the provisions of Executive Order No. Three of Governor Thomas J. Meskill, promulgated June 16, 1971, concerning labor employment practices, Executive Order No. Seventeen of Governor Thomas J. Meskill, promulgated February 15, 1973, concerning the listing of employment openings and Executive Order No. Sixteen of Governor John G. Rowland promulgated August 4, 1999, concerning violence in the workplace, all of which are incorporated into and are made a part of the Contract as if they had been fully set forth in it. At the Contractor's request, the Client Agency shall provide a copy of these orders to the Contractor. The Contract may also be subject to Executive Order No. 7C of Governor M. Jodi Rell, promulgated July 13, 2006, concerning contracting reforms and Executive Order No. 14 of Governor M. Jodi Rell, promulgated April 17, 2006, concerning procurement of cleaning products and services, in accordance with their respective terms and conditions.

This contract is subject to the provisions of the Department of Public Works **Sexual Harassment Policy** ("Policy") and, as such, the contract may be canceled, terminated, or suspended by DPW for violation of or noncompliance with said Policy. Said document is hereby incorporated herein by reference and made a part hereof as though fully set forth herein. This policy may be found at the Department of Public Works Website at **http://www.ct.gov/dpw**, under **Publications**.

All **technical** questions must be in writing (not phoned or emailed) and faxed to the **Architect/Engineer** with a **copy** to the **DPW Project Manager** listed below.

Architect/Engineer/ Consultant:	Tia Soo Kim Partners, LLC	Fax No:	860-249-0695
Construction Administrator	Downes Construction	Fax No:	860-225-3617
DPW Project Manager:	Barbara Cosgrove	Fax No:	860-713-7264

All **bid** questions should be addressed to the **Officer** listed below.

Associates Fiscal Administrative Officer:	Gail Blythe	Fax No:	(860) 713-7395

Contract Time Allowed: 1125 Calendar Days

Liquidated Damages: $ 4,432.00 Per Calendar Day beyond Substantial Completion

$ 3,430.00 Per Calendar Day beyond ninety (90) days after Substantial Completion

Prevailing Wage Rates: Prevailing wages are required on this project, in accordance with the schedule provided in the bid documents, pursuant to Connecticut General Statutes Section 31-53 (a) through (h), as amended.

Each contractor who is awarded a contract on or after October 1, 2002 shall be subject to provisions of the Connecticut General Statutes, Section 31-55a concerning **annual adjustments** to prevailing wages.

Wage Rates will be posted each **July** 1st on the **Department of Labor website**: **www.ctdol.state.ct.us** . Such prevailing wage adjustment shall not be considered a matter for any contract amendment.

The wages paid on an hourly basis to any mechanic, laborer or workman employed upon the work herein contracted to be done and the amount of payment or contribution paid or payable on behalf of each such employee to any employee welfare fund, as defined in subsection (h) of section 31-53 of the Connecticut General Statutes, shall be at a rate equal to the rate customary or prevailing for the same work in the same trade or occupation in the town in which such public works project is being constructed. Any contractor who is not obligated by agreement to make payment or contribution on behalf of such employees to any such employee welfare fund shall pay to each employee as part of his wages the amount of payment or contribution for his classification on each pay day.

Procurement
Department of Public Works