INTERDEPARTMENTAL MEMORANDUM

TO: Mellanee Walton, Associate Fiscal Administrative Officer
Bidding & Contracts, Room G-35
165 Capitol Avenue, Hartford, CT 06106

FROM: Joel Baranowski, Project Manager
Team Cavacas, Room 463
165 Capitol Avenue, Hartford, CT 06106

DATE: **July 29, 2009**

SUBJECT: **ADDENDUM # 2**

PROJECT TITLE: West Campus Development – Phase 2
Norwalk Community College
Norwalk, Connecticut

PROJECT NO.: **BI-CTC-406**

SCHEDULED BID OPENING: **August 12, 2009**

Please expedite the attached Addendum # 2.

1. The total number of pages in this addendum is: **16.**
2. There are no drawings issued as part of this addendum – **Not Applicable.**
3. See attached Revised "Bid Released" form (55) dated: **Not Applicable.**
4. This addendum responds to questions raised by the bidding community. It also incorporates infrastructure work to support the artist's installation. The Arts Commission has committed to covering any cost increase as a result of this work.

Attachment
xc: Agency
Team File
Project Manager

NORWALK COMMUNITY COLLEGE – PHASE 2
WEST CAMPUS DEVELOPMENT
NORWALK, CONNECTICUT
PROJECT: BI- CTC - 406

BID OPENING	**1:00 P.M.**	**August 12, 2009**
ADDENDUM NUMBER TWO	**DATE OF ADDENDUM**	**July 30, 2009**

The following clarifications are applicable to drawings and specifications for the project referenced above.

Item 1

New Architectural and Mechanical Sketch Drawings, dated July 30, 2009, and attached:

1. SK-L1.00-A "Art Piece Layout and Details"
2. SK-A2.00-B "Ground Floor Addition Plan"
3. SK-A6.00-A "Detail 06-A Detail @ Extruded Alum. Filler"
4. SK-A7.05-A "Detail 08"
5. SK-S301-A "Artwork Foundation"
6. SK-E001-A "Art Piece Electrical Partial Plan"

Item 2

On Drawing L1.00, add Art Piece Layout and Granite Cobble Paving Detail as indicated on attached Sketch SK-L1.00-A dated 30 July 2009.

Item 3

On Drawing A2.00, on Ground Floor Plan: New Building, in Lobby/H013, change wall finish to "W2" as indicated on attached Sketch SK-A2.00-B dated 30 July 2009.

Item 4

On Drawing A6.00, on Plan Details/Exterior Details, add new Detail 06-A as indicated on attached Sketch SK-A6.00-A dated 30 July 2009.

Item 5

On Drawing A7.05, on Interior Details, revise Detail 08 as indicated on attached Sketch SK-A7.05-A dated 30 July 2009.

Item 6

On Drawing S3.01, on Structural Foundation Details, add new Details of Artwork Foundation as indicated on attached Sketch SK-S301-A dated 30 July 2009.

Item 7

On Drawing E001, on Electrical Site Plan, add Artwork electrical information as indicated on attached Sketch SK-E001-A dated 30 July 2009.

Item 8

In Specification Section 00001, on Page 7, under Division 17, delete Section 17200 from the table of contents and add the following in lieu thereof:

"Not Used"

Item 9

In Specification Section 01019, Article 1.3, Paragraph C, Subparagraph 5, add new Subparagraph "d" to read as follows:

"d. Art Work Water and Drain Piping Allowance: Include the Stipulated sum of $20,000 for excavation, installation, and backfilling for a one (1) inch insulated water line between B Wing Boiler Room and the art work location as indicated on Sketch SK-L1.00-A dated July 30, 2009. Provide a valve pit for the water line with an automatic valve with tie-in to the new building BMS system. Include cost of excavation, installation, and backfilling for a four (4) inch drain from the valve pit to the sanitary system."

Item 10

In Specification Section 15410, Article 2.1, add new Paragraphs "R", "S", and "T" to read as follows:

"R. Copper Medical Gas Tube: ASTM B819, Type L, seamless, drawn temper that has been manufacturer cleaned, purged, and sealed for vacuum service.
1. General Requirements for Copper Fittings: Manufacturer cleaned, purged, and bagged for vacuum service according to CGA G-4.1.
2. Wrought-Copper Fittings: ASME B16.22, solder-joint pressure type or MSS SP-73, with dimensions for brazed joints.
3. Copper Unions: ASME B16.22 or MSS SP-123, wrought copper or cast-copper alloy.
4. Press-Type Fittings:
   a. Manufacturers: Subject to compliance with requirements, provide products by one (1) of the following:
      1) Viega; Plumbing and Heating Systems.
      2) Victaulic.
   b. NPS 2 and Smaller: Wrought-copper fitting with EPDM O-ring seal in each end.
   c. NPS 2-1/2 to NPS 4: Bronze fitting with stainless-steel grip ring and EPDM O-ring seal in each end."

"S. Copper Water Tube: ASTM B88, Type M, seamless, drawn temper.
1. Cast-Copper Fittings: ASME B16.18, solder-joint pressure type.
2. Wrought-Copper Fittings: ASME B16.22, solder-joint pressure type.
3. Cast-Copper-Alloy Flanges: ASME B16.24, Class 150.
4. Copper Unions: ASME B16.22 or MSS SP-123, wrought copper or cast-copper alloy.
5. Press-Type Fittings:

a. Manufacturers: Subject to compliance with requirements, provide products by one (1) of the following:
   1) Viega; Plumbing and Heating Systems.
b. NPS 2 and Smaller: Wrought-copper fitting with EPDM O-ring seal in each end.
c. NPS 2-1/2 to NPS 4: Bronze fitting with stainless-steel grip ring and EPDM O-ring seal in each end."

"T. Joining Materials:
1. Solder Filler Metals: ASTM B32, lead-free alloys. Include water-flushable flux according to ASTM B813.
2. Brazing Filler Metals: AWS A5.8, BCuP Series, copper-phosphorus alloys for general-duty brazing unless otherwise indicated."

Item 11

In Specification Section 15901, Article 1.10, Paragraph B, add new Subparagraph "6" to read as follows:

"6. Siemens Building Technologies, Inc."

Item 12

Delete Specification Section 17200 in its entirety from the Project Manual and delete any references to this section in other specification sections. Work of this section will be contracted separately.

Item 13

LIST OF BIDDING REQUESTS FOR INFORMATION AND RESPONSES: SEE ATTACHED

All questions must be in writing (not phone or e-mail) and must be forwarded to the consulting Architect/Engineer, Jan Keane (212) 866-5006 with copies sent to the DPW Project Manager, Joel Baranowski (860) 713-7261 and Construction Administrator, Jeff Fogel (516) 938-5491.

End of Addendum Number Two

Mellanee Walton
Associate Fiscal Administrative Officer
Department of Public Works

THIS PAGE INTENTIONALLY LEFT BLANK

1. Q. *Fire Alarm Specification, Division 16721, 2.3. The specification calls for a Notifier fire alarm panel to be connected to the existing fire alarm control panel. The building currently has two existing Simplex 4100U fire alarm panels fully capable of handling the devices in the renovated space. Therefore shouldn't the specification reflect add to existing Simplex system? Please clarify.*

   A. The new addition is a stand alone building with its own power service and fire alarm panel. The F.A. Panel shall be connected to the main system. Refer to Addendum No. 2 for changes to Section 16721 regarding this question.

2. Q. *Curtain glass: Please confirm that both silicone butt joints and caps are required.*

   A. Confirmed.

3. Q. *Hollow metal doors & doors with the circular glass: Will glass subs be supplying glass for these doors? Will glass sub be supplying & installing the doors in the curtain wall and wall systems?*

   A. General Contractors, not the design team, are responsible for scoping out the various trades required to complete the project.

4. Q *Storefront finish: What type of finish? Should sub price out as bone white (as curtain wall)?*

   A. Refer to Section 08411, Article 2.9 for finish and color of storefront framing.

5. Q. *Details 06/A6.00 & 09/A6.00 Extruded aluminum infill by window manufacturer: What is the infill? Can more details re: caps/inserts for curtain walls be provided?*

   A. See attached Sketch SK-A6.00-A.

6. Q. *Extended mullion cover for curtain wall: Does not look like a standard option. What kind of extended face cover is the Architect looking for?*

   A. Refer to Section 08911, Article 2.3, Paragraph N. Custom 1600 System 1 Exterior Cover manufactured by Kawneer.

7. Q. *Is the color of the composite panels to match the color of the curtain wall?*

   A. Refer to Section 07415, Article 2.3, Paragraph B.

8. Q. *What is the color of the Architectural Wall System? The color options are "as selected by Architect". Color choices are needed to price out appropriately.*

   A. Colors for the Architectural wall System are custom colors as described on A7.04

9. Q. *Drawing M2.11, the 8x8 duct from storage room to pipe tunnel – does this duct vent in to the pipe tunnel or does it connect to an existing duct?*

   A. Duct vents into the pipe tunnel.

10. Q. *According to the construction documents there is work being done in the B wing boiler room, the fire pump room, in rooms A104, A119, A122, A121, A120, A124, and A125 and room A220. Question: Code Compliance plans indicate these areas are outside scope of renovation. Have these areas been reviewed for code compliance?*

    A. Yes, these rooms have been reviewed for code compliance to the extent necessary to complete the project.

11. Q. *Drawing A2.11A, Storage Room A124 shows an opening on the north wall. Drawing A10.1A demo doesn't, is this a new or existing opening?*

    A. Opening is existing.

12. Q. *Drawing A2.11A shows double door, wall and window frame along with angled wall at vestibule A111 and corridor A1112. Is there new construction at this area? Is the wall squared off as shown on drawing A2.11A? If so please provide a new drawing of this area.*

    A. We are unclear as to the area of the project that the question is referring to.

13. Q. *Drawing A2.11A, are doors to alcoves A113 and A212 new or existing?*

    A. Doors are existing.

14. Q. *Drawing A1.02A and A2.12A. Rooms A200, A215, and A216 show relocated marker boards and projection screens. What room are they relocated from?*

    A. Marker board and projection screen in Room A215 is to be relocated from First Floor Classroom, refer to Drawing A1.0A for location.

    Marker board and projection screen in Room A216 are to be new to match existing relocated boards and screens.

    Marker board in Room A200 is to be new; projection screen is existing to remain.

15. Q. *Division 10 – Specialties. Please confirm if both interior and exterior signage will be provided by Owner.*

    A. All signage is to be provided and installed by the contractor.

16. Q. *Division 10 – Specialties. Please advise which sun control device specification section we are to use, specification section 08911 Glazed Aluminum Curtain Wall, or 10705 Exterior Sun Control Devices.*

    A. Use both sections. Refer to Section 08911, Article 2.2, Paragraph A and Section 10705, Article 2.3, Paragraph A for locations of use for each type of sunshade.

17. Q. *Division 15 – Mechanical. Drawing M2.14 calls out existing boilers to receive new combination gas and oil burners, typical of two (2). Please provide the manufacturer and model numbers of the existing boilers in order to properly size the requirements for the new burners.*

    A. Boilers are the same as the new boilers. Refer to Boiler Schedule on Drawing M4.01.

18. Q. *Drawing A7.00. Elevations indicates ceramic tile on the walls in Lobby H013; Drawing A2.00 Floor Plans indicates impact resistant gyp on the wall. If the walls have ceramic tile, which tile, A-W1 or A-W2?*

    A. The walls in lobby H013 have both impact resistant gyp and ceramic tile as indicated on the elevations on A7.00. Both tile colors T1 and T2 are required in this space- see A7.04 for locations of each.

19. Q. *Drawing A7.00 elevation 4, wall from outside corner to door H000.3 (wall with display case). Should this wall be ceramic tile?*

    A. This wall is impact resistant gyp.

20. Q. *Section 02081 paragraph D states that "any damages caused during the performance of abatement contractors shall be repaired by the contractor". Will the Phase 1 abatement contractor be repairing any areas outside the demolition areas shown on drawings A1.01A and A1.02A prior to building A turnover to the general contractor?*

    A. No, the Phase 1 abatement contractor will not be performing any repairs.

21. Q. *On drawing S2.00 the footing at column line D/5 is listed as an F12L type. There is no F12L footing in the footing schedule. Footing type F11 is listed on the footing schedule however, not found on the foundation plan.*

    A. See the note at the bottom of the footing schedule box on drawing S2.00 for information regarding the L designation. There are no type F11 footings but there are type F11L footings and the information on the type F11 footing is required to understand what a type F11L footing is.

22. Q. *The note on drawing L3.01 states that the contractor is to contact the client to identify the original sign manufacturer for the campus entry sign. Are we to assume we are to contact DPW for this information? If this is not correct, please provide contact person, phone, and email and or fax number(s). We also assume that this is not a lighted sign. Please confirm which sign type(s) are to be provided by the owner and which are to be provided by the contractor. Also, who will be installing the owner supplied signs, owner or contractor?*

    A. The sign manufacturer is: American Sign, Inc., 614 Ferry Street, New Haven, CT 06513, Telephone: 203-624-2991. This sign is not a lighted sign. All signs on the contract documents are to be provided and installed by the Contractor.

23. Q. *Section 01010 Summary of work C.1. Reads "upon completion of phase 2A - interior asbestos abatement, the contractor shall commence phase 2B - exterior asbestos abatement work." Please advise if these (2) operations may occur concurrently.*

    A. No

24. Q. On the equipment schedule: will the flammable storage cabinets and acid cabinets need to be vented.

    A. No, the flammable storage cabinets and acid cabinets do not need to be vented.

25. Q. On the equipment schedule: are there power requirements for the hospital beds? Are their power requirements for the treadmills, upright and recumbent cycles, steppers, upper body ergometer, gauntlet and the ellipticals?

A. The power requirements for this equipment are incorporated into the documents.

26. Q. *Drawing EP2.01, there is no "R" in the key notes*

A. "R" = Flush floor box with double duplex convenience receptacle and double data outlets.

27. Q. *Drawing EP2.02, there is no "P" in the key notes*

A. "P" = Outlet box for emergency gas shut-off and key switch reset.

28. Q. *Drawing A4.01 Sections 7 & 8 are incomplete. Please provide revised details.*

A. Use Section 6 for continuation of detailing at Sections 7 and 8. The intent was to show the full building height in Section 6 and to only show variations from Section 6 below the second floor in Sections 7 and 8.

29. Q. *Drawings A4.01 sections 6 & 7 calls out column line B1. There is no column line B1 shown on the architectural or structural drawings. Please advise.*

A. Section 6 Column Line B1 is correct. See Drawing A2.03 Architectural Roof Plan. Delete Column B1 designation on Section 7. This center line dimension designates the center line of the beam.

30. Q. *Drawing E001 shows a partial courtyard lighting layout with a type "AA1" light. This light is not in the spec. Please specify type, make and quantity.*

A. Hubbell Model No. VE8D-70MH-277-FL/SP-C-YK-WM. Quantity as indicated on Drawings.

31. Q. *Detail 9/S3.01 and 01A/A4.00A show a foundation wall extension at Wing A. However, the limits of this work is not clear. Please clarify.*

A. Refer to drawings S2.11A and A2.11A. The detail applies at the new curtain wall on line XJ in the area of grids X12 and X10 as shown. The wall is approximately 32' long.

32. Q. *Please submit a scaled version of CIT-Wing with electrical main distribution location and Tel/Data I.T. Location*

A. Please refer to Drawing E001.

33. Q. *Drawing A2.11A references detail 1/A4.01A on the east wall of Corridor A114. Does this detail only apply to the areas that require a new duct shaft, or is this detail required along the entire corridor, on both sides and both floors?*

A. Detail only applies to the area that requires a new duct shaft, on one side of corridor and goes from the second floor up to the roof as indicated on Detail 1/A4.01A.

34. Q. *There is no specification for the vacuum piping. Are the pipe sizes correct for the vacuum piping?*

A. Refer to Addendum No. 2 for vacuum piping specification. The pipe sizes are correct as indicated on the Drawings.

35. Q. *On the above referenced project, spec section 12346 2.2 D.1 & E.1 calls for Select Clear White Oak Quarter sliced Veneer, Face Grade AA, with minimum six inch veneer leaves on Exposed Exterior components of cabinetry. Although available, this material carries a high premium due to the six inch minimum requirement on leaf width. (Industry standard on white oak quarter sawn is four to five inch widths). Please confirm that this is the design intent and required.*

A. 4" minimum veneer leafs are acceptable.

THIS PAGE INTENTIONALLY LEFT BLANK

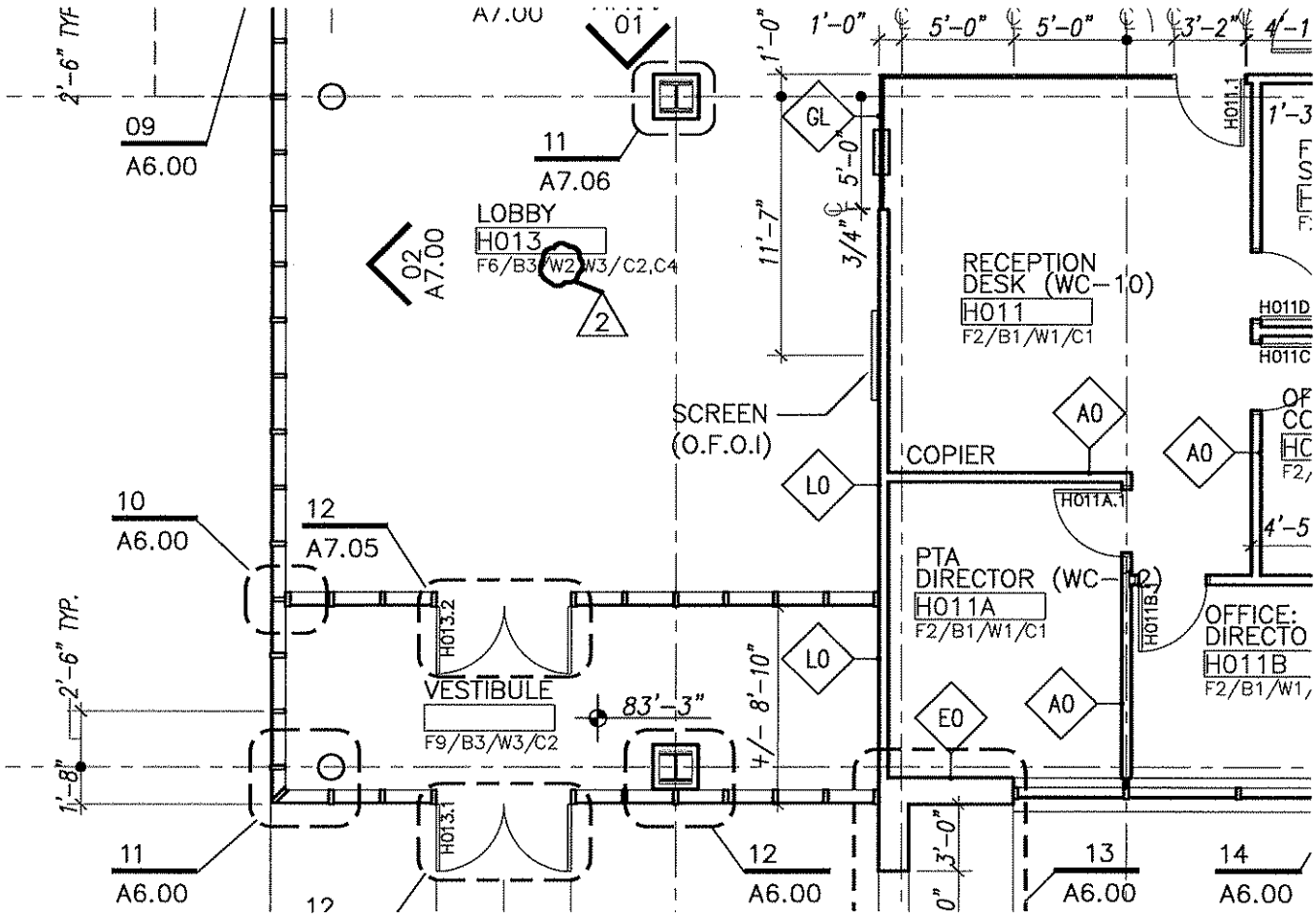

SK-A2.00-B

ADDENDUM 2: 7/30/09

NORWALK COMMUNITY COLLEGE: WEST CAMPUS DEVELOPMENT

DPW PROJECT NO. BI-CTC-406

SCALE: 1/8" = 1'-0"

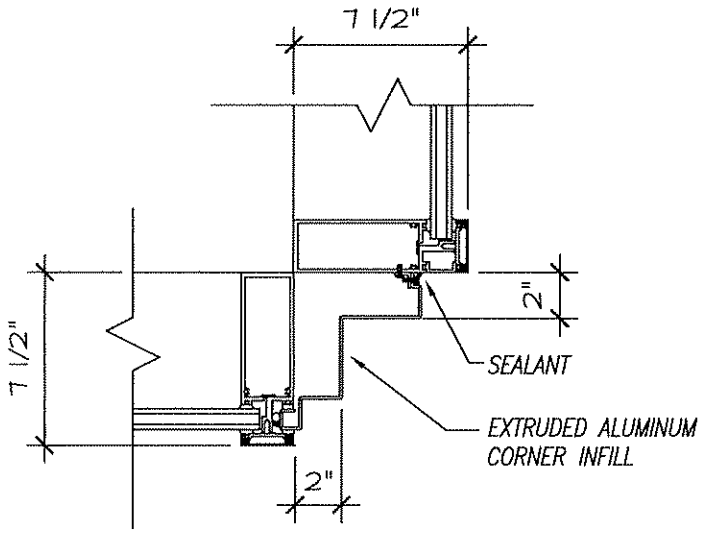

06-A DETAIL @ EXTRUDED ALUM. FILLER
1 1/2" = 1'-0 "

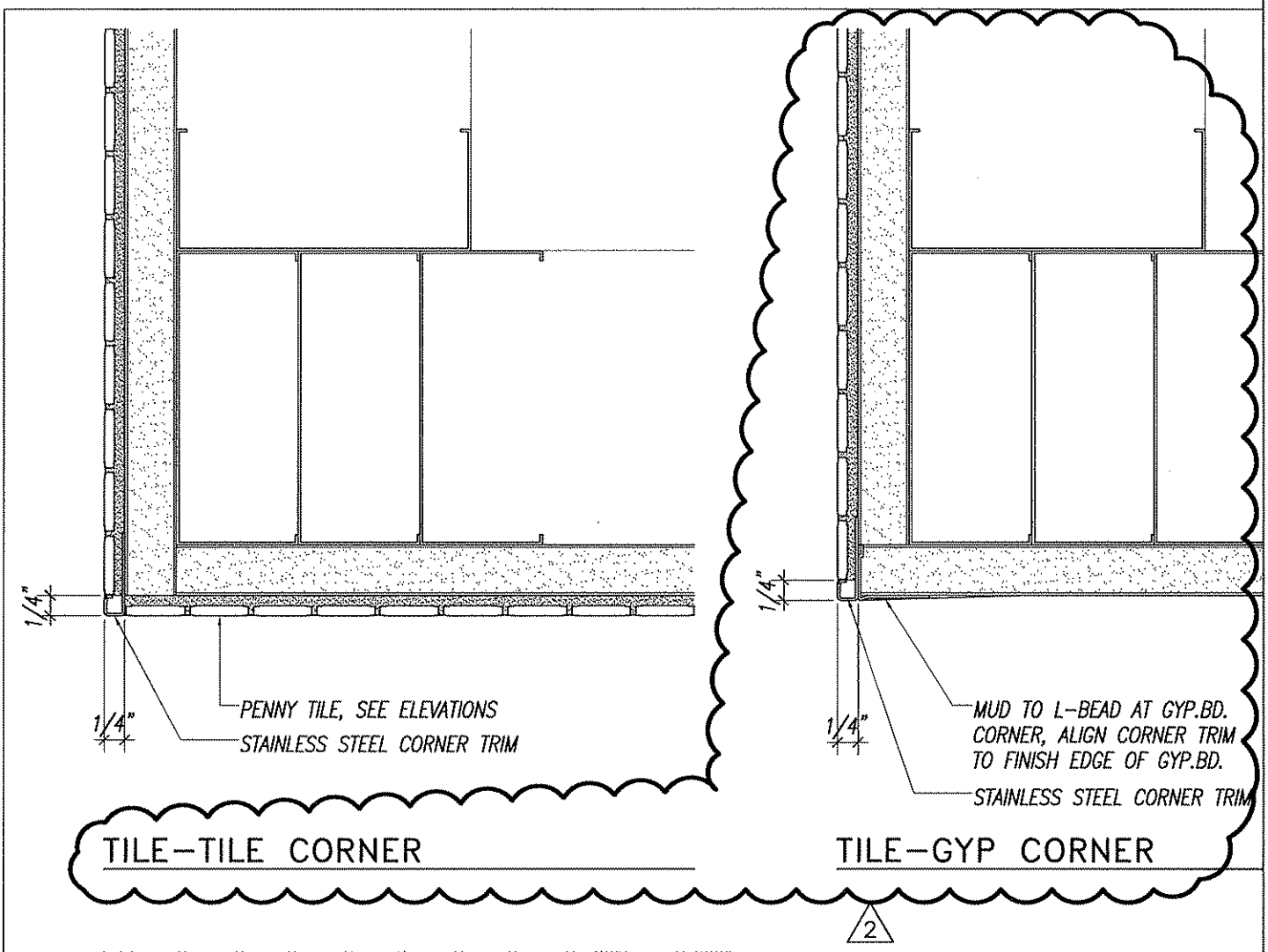

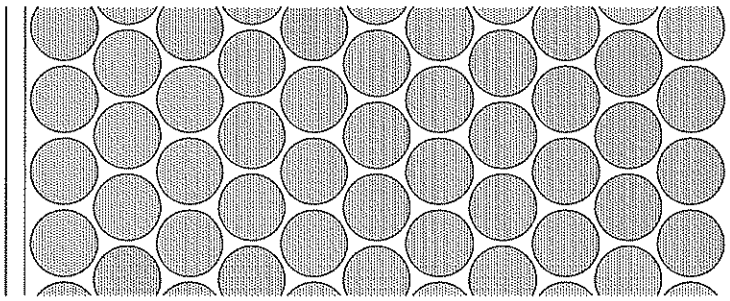

040400-1137-AP

08 DETAIL PLAN SECTION: TYP TILE OUTSIDE CORNERS
6" = 1'-0"

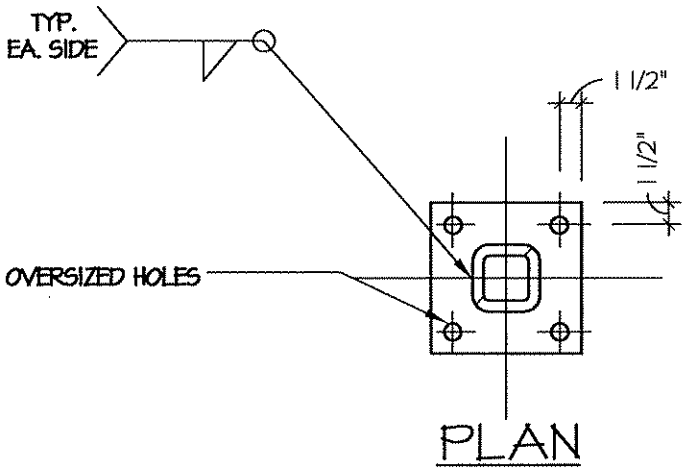

PLAN

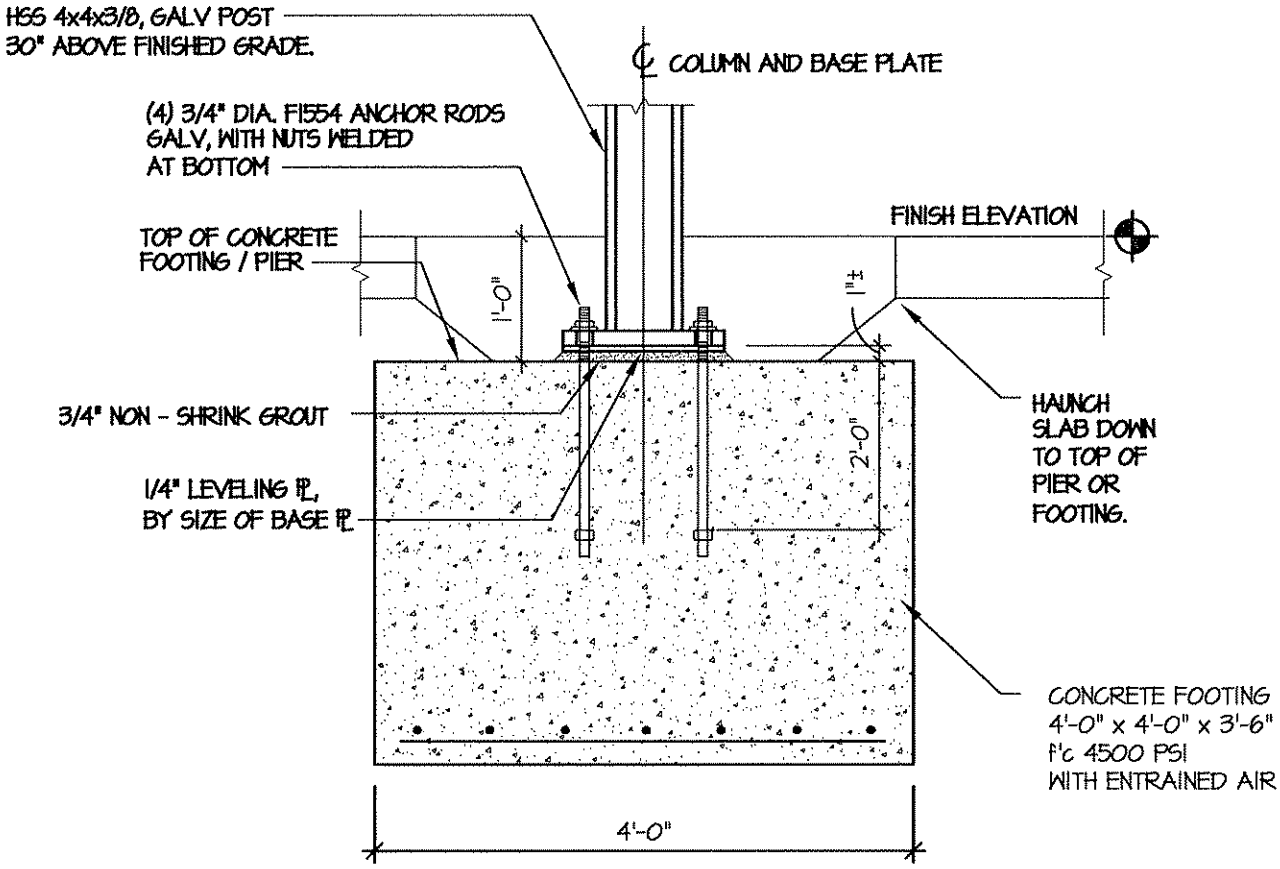

ARTWORK FOUNDATION

SK-S301-A

ADDENDUM 2 7/30/09

NORWALK COMMUNITY COLLEGE: WEST CAMPUS DEVELOPMENT

DPW PROJECT NO. BI-CTC-406

SCALE: 3/4"=1'-0"

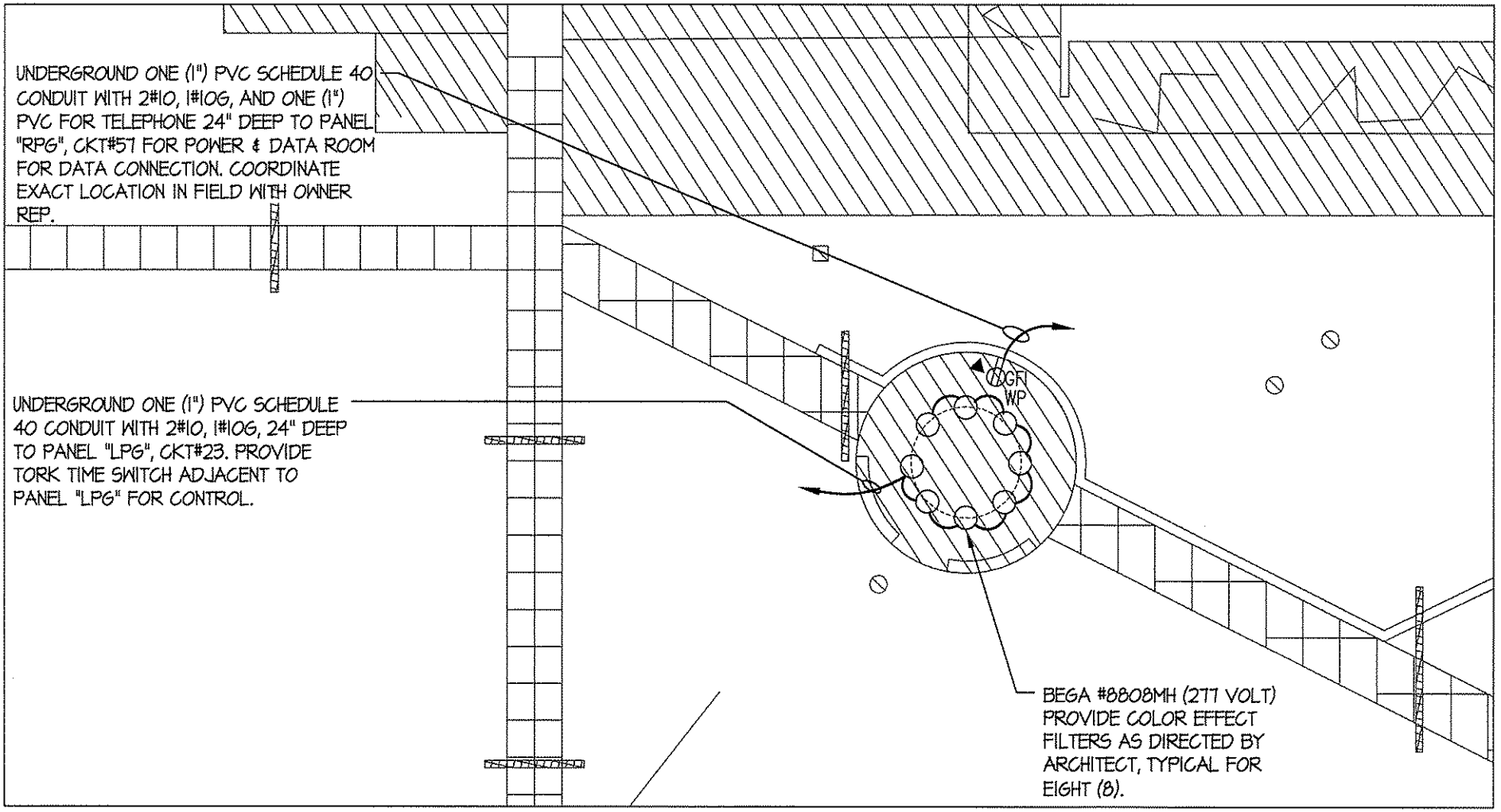

ART PIECE ELECTRICAL PARTIAL PLAN

SK-E001-A

ADDENDUM 2: 7/30/09

NORWALK COMMUNITY COLLEGE: WEST CAMPUS DEVELOPMENT

SCALE: 1" = 20'-0"

DPW PROJECT NO. GFSDFG

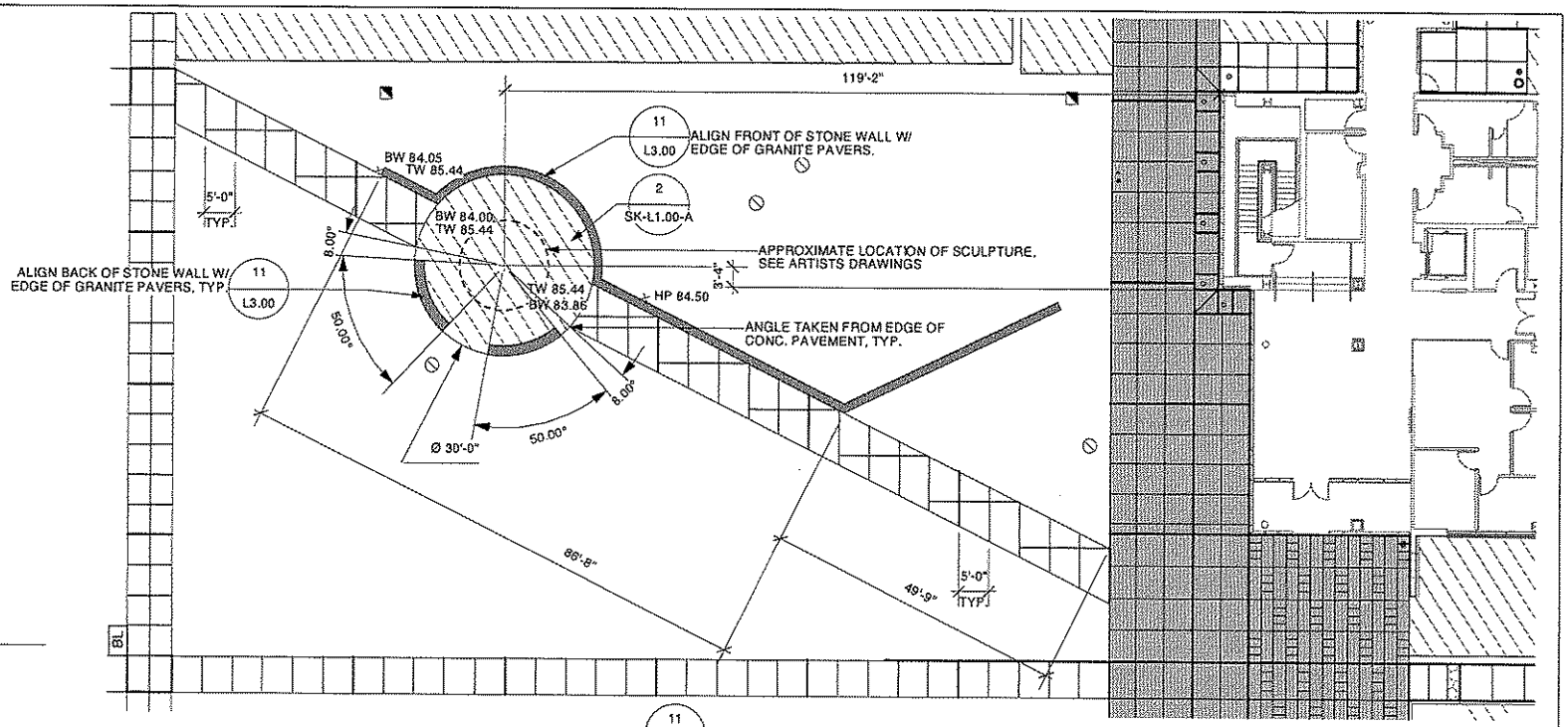

1 ART PIECE LAYOUT

SK-L1.00-A 1' = 20'-0"

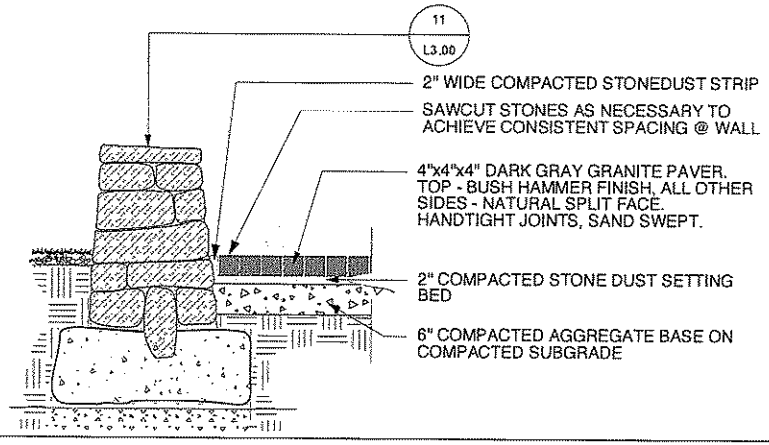

2 GRANITE COBBLE PAVING DETAIL

SK-L1.00-A 1/2" = 1'-0"

SK-L1.00-A

NORWALK COMMUNITY COLLEGE: WEST CAMPUS DEVELOPMENT

DPW PROJECT NO. BI-CTC-406 PAGE 16 OF 16

ADDENDUM 2: 7/30/09

SCALE: VARIES

INTERDEPARTMENTAL MEMORANDUM

TO: Mellanee Walton, Associate Fiscal Administrative Officer
Bidding & Contracts, Room G-35
165 Capitol Avenue, Hartford, CT 06106

FROM: Joel Baranowski, Project Manager
Team Quimby, Room 463
165 Capitol Avenue, Hartford, CT 06106

DATE: **July 14, 2009**

SUBJECT: ADDENDUM # 1

PROJECT TITLE: West Campus Development – Phase 2
Norwalk Community College
Norwalk, Connecticut

PROJECT NO.: **BI-CTC-406**

SCHEDULED BID OPENING: **August 12, 2009**

Please expedite the attached Addendum # 1

1. The total number of pages in this addendum is: 23
2. There are no drawings issued as part of this addendum – Not applicable.
3. See attached Revised "Bid Released" form (55) dated: Not Applicable
4. Addendum #1 clarifies a few items identified as a result of code reviews and includes pre-bid conference sign-in sheet which was requested by the bidders. These clarifications should have no impact on the cost of the work.

Attachment
xc: Lenell Kittlitz, Board of Trustees, Community-Technical Colleges (Agency)
Team File
Project Manager - Baranowski

NORWALK COMMUNITY COLLEGE – PHASE 2
WEST CAMPUS DEVELOPMENT
NORWALK, CONNECTICUT
PROJECT: BI- CTC - 406

BID OPENING	**1:00 P.M.**	**August 12, 2009**
ADDENDUM NUMBER ONE	**DATE OF ADDENDUM**	**July 15, 2009**

The following clarifications are applicable to drawings and specifications for the project referenced above.

Item 1

New Technical Specification Sections issued by this Addendum:

1. Section 16269 - Variable-Frequency Motor Controllers

Item 2

New Architectural and Mechanical Sketch Drawings, dated July 15, 2009, and attached:

1. SK-A2.00-A "Ground Floor Addition Plan"
2. SK-A7.40-A "Type M Plaque Sign"
3. SK-A8.03-A "Ground Floor Flooring Pattern-New Building"
4. SK-M3.06-A "Gas Train Piping Diagram"
5. SK-M3.06-B "#2 Oil Piping Diagram"

Item 3

Attached is Pre-bid Meeting List of Attendees consisting of 3 pages inclusive for your use and information.

Item 4

On Drawing M2.01, delete references to Key Notes 4 & 11 and corresponding symbols.

Item 5

On Drawing M4.01, under AIR HANDLING UNITS, change Note 8 to the following:

"VFDs for this equipment will be provided by the mechanical equipment supplier, in accordance with the requirements of Specification Section 16269, and shall be installed and wired by the Electrical Contractor."

Item 6

On Drawing M4.01, under ENERGY RECOVERY UNITS, change Note 8 to the following:

"VFDs for this equipment will be provided by the mechanical equipment supplier, in accordance with the requirements of Specification Section 16269, and shall be installed and wired by the Electrical Contractor."

Item 7

On Drawing M4.01, under ROOFTOP AIR CONDITIONING UNITS, change Note 8 to the following:

"VFDs for this equipment will be provided by the mechanical equipment supplier, in accordance with the requirements of Specification Section 16269, and shall be installed and wired by the Electrical Contractor."

Item 8

On Drawing M4.01, under PUMPS, add Note 5:

"VFDs for this equipment will be provided by the mechanical equipment supplier, in accordance with the requirements of Specification Section 16269, and shall be installed and wired by the Electrical Contractor."

Item 9

On Drawing M4.01, under BOILERS, change Note 3 to the following:

"For Boiler sequence of operation see Specification Section 15901."

Item 10

On Drawing M4.02, under the FAN SCHEDULE, change Note 3 to read as follows:

"Motor starters shall be provided under Division 16. Coordinate location of starters with the Electrical Contractor."

Item 11

On Drawing E2.00, in the Mechanical Equipment Schedule, add Combustion Air Fan CAF-1 located in the Wing "B" Boiler Room, 1-HP motor, 208V, 3PH, 3#12, 1#12G in 3/4-inch conduit, and 30A3P disconnect switch. The fan is located as indicated on Drawing EP2.11 and is fed as per Drawing E402 Panel "PB".

Item 12

On Drawing EP2.11, under KEYED NOTES, change Note Q to read as follows:

"VFDs for this equipment will be provided by the mechanical equipment supplier, in accordance with the requirements of Specification Section 16269, and shall be installed and wired by the Electrical Contractor."

Item 13

In Specification Section 00001, on Page 7 of 8, under Division 16 - Electrical, ADD new Section 16269 to read as follows:

16269	**Variable-Frequency Motor Controllers**	**12**

Item 14

In Specification Section 15901, Article 1.10, Paragraph B, add new Subparagraph "6" to read as follows:

"6. Trane Company"

Item 15

In Specification Section 15901 delete Article 3.16 in its entirety and renumber subsequent articles accordingly.

Item 16

In Specification Section 15902, Article 2.1, add new Subparagraph "4" to read as follows:

"4. Phoenix Controls Corporation."

All questions must be in writing (not phone or e-mail) and must be forwarded to the consulting Architect/Engineer, Jan Keane (212) 866-5006 with copies sent to the DPW Project Manager, Joel Baranowski (860) 713-7261 and Construction Administrator, Jeff Fogel (516) 938-5491.

End of Addendum Number One

Mellanee Walton
Associate Fiscal Administrative Officer
Department of Public Works

LiRo Program and
Construction Management, P.C.

Norwalk Community College
Phase II West Campus Development

Pre-bid Meeting **June 30, 2009**

Attendees

NAME		COMPANY	E-MAIL	TELEPHONE	FAX
PRINT	SIGN				
Jeff Fogel	[signature]	LIRO	FogelJ@LIRO.com	646-996-1883	203-296-4375
Stephen Connelly	[signature]	Fun/O'Neill Environ	SConnelly@fundo.com	860-646-7469	860-649-6883
Carl Goodman	[signature]	NCC Foundation Bd	CTGoodman@[illegible]		
John Doherty	[signature]	Mitchell/Guillaume Arch	DOHERTY@MITCHELLGUILLAUME.COM	212-863-4000	212-866-5006
John Mann	[signature]	O&G Ind	johnmann@ogind.com	860-496-4267	-4227
Donald McGlone	[signature]	Brand Fire	DMIGS59@YAHOO.COM	860-405-0017	860 405-0008
Jim Culkin	[signature]	KBE Building	jculkin@KBEBuilding.com	860-284-7460	860-284-7860
Mike Robertson	[signature]	KBE Building	mrobertson@KBEbuilding.com	860-284-7630	
Larry Brunoli	[signature]	Lawrence Brunoli Inc	L.Brunoli@LB.com	860 676 9906	6760455
Chris Powers	[signature]	The Whiting Turner Contract Co.	Chris.Powers@whiting-turner.com	(203) 789-8700	(203) 789-8776
Pio Bonvicini - Rizzo Corporation - T. 203 731 3131 Fx 203 7313138 - pbonvicini@rizzocorporation.com					
Robert Denton	[signature]	Gen's Carpentry		203-213-7370	
Brian Laburte	[signature]	J.R. Vingro Corp	Patriotdemo@yahoo	401-943-7100	401-647-5041
David Secondino		A. Secondino & Son	dave@secondinoandson.com	203-481-3492	203-483-8804
Javed Choudhry	[signature]	A Prete Const.	Jchoudhry@APrete.com	203-469-1397	203-468-2034
Ed Herndon	[signature]	Hunter Roberts	EHerndon@hunterroberts.com	212/321-6919	212/321-6993
Michael Winship	[signature]	Plaza Construction	mwinship@plazaconstruction.com	212 849-4796	212 849 4845

LiRo Program and
Construction Management, P.C.

Norwalk Community College
Phase II West Campus Development

2

Pre-bid Meeting

June 30, 2009

Attendees

NAME		COMPANY	E-MAIL	TELEPHONE	FAX
PRINT	SIGN				
CHRIS NANCI	[signature]	FIP CONSTRUCTION	nancic@fipconstruction.com	203-271-0356	272-5073
Gregg Raucci	[signature]	BISMARK CONSTRUCTION	GMRAUCCI@BISMARKCONSTRUCTION.COM	203-876-8331	203 876-8[illegible]
MIKE FLAHERTY	[signature]	GAR-SAN CORP.	MFLAHERTY@GARSAN.COM	8602748874	860 274 2118
James Uryase	[signature]	Garsan Corp	Juryase@garsan.com	860-274-8874	860 274-2118
Marco Fajardo	[signature]	Dirienzo Mechanical	Marco@Dirienzomech.com	203-397-0367	203-387-7873
DAVID SCHUNTER	[signature]	ANDRON CONSTRUCTION	dschunter@andronc.com	914-232-7531	914-232-4185
MIKE PELCZAR	[signature]	JIAPALUCCIO INC	mikep@jiapalluccio.com	203-775-1437	740-9985
Anthony Curcio	[signature]	RIZZO CORP G.C.	ACURCIO@RIZZOCORPORATION.COM	203-731-3131	203-731-8747
Sam Walters	[signature]	Quality Welding	sam@qualitywelding.com	860-585-1121	860-940-6193
Jose M Palacios	[signature]	LM Company	Mike@LMRoofin	914 937 1030	
MONTE RUSSO	[signature]	A&J CONSTRUCTION	MONTE@AJPAVING.COM	203-775-1385	203-775-5816
Steven Vincent	[signature]	CABLE SYSTEMS of North Haven	Steven@CABLE SYSTEMS North Haven.com	2032341250	2032347430
Ed Hickey	[signature]	Acme Elect. Co.	Mannyvatti@AOL.com	208 348 0116	203 334 6057
BRIAN HORTON	[signature]	ASSOCIATED CONST	bdh@accgc.com	860 296-4114	860 296-7206
MIKE HENZY	WORTH CONST.	WORTH CONST	CHIEFESTIMATOR@WORTH.COM	203-797-8788	203-791-2515
Bill O'Donnell	[signature]	A.C. Fencing	WWW.Wacfencing.com	203-624-9230	203-624-1903
Jonathan Sygrove	[signature]	Newfield Construction	jonsygrove@newfieldconstruction.com	860-509-3042	860-953-1605
Gus Pappagallo	[signature]	A. Pappagallo	Gus.Pappagallo@[illegible]	203 523-0303	523-0230

LiRo Program and
Construction Management, P.C.

3

Norwalk Community College
Phase II West Campus Development

Pre-bid Meeting **June 30, 2009**

Attendees

NAME		COMPANY	E-MAIL	TELEPHONE	FAX
PRINT	SIGN				
Mike Reilly	M. Reilly	A Ide	MIKER@AIGLORP.ORG	203-932-9639	203 931 8786
Tom Walsh	[illegible]	HP Construction	twalsh@hpconstruction	203-388-1139	203 359-0202
Joel Baranowski	[illegible]	Public Works		(860) 713-5612	
Dave Surprenant Jr	[illegible]	DPW		860 713 5754	
Jerry Cohen	JG	LiRo	cohenj@liro.com	347 728 9476	
Rick Voelker	Richard Voelker	Fletcher Thompson	rvoelker@ftae.com	203-225-6576	
Joe Remson	[illegible]	" "	jremson@ftae.com	203-225-6500	
Stephen L Horvath	[illegible]	SLH+Associates Inc	SLHorvath@AOL.com	203-656-6656	203 656-4464
Adam Kessler	[illegible]	Purcell Assoc.	AKessler@purcellassociates.com	(860) 633-8341	
Rich Santoro	[illegible]	VJ Assoc	rsantoro@vjassociates.com	516-932-1010	
Brian Kronenberger	[illegible]	Kronenberger & Sons	BRIANK@KRONENBERGERSONS.com	860-347-4600	860-343-0309
Ron Goodin	Ronald Goodin	DPMCT	rgoodin@dpm-mc.com	860 882-5608	
Peter Perez	Local 146			203 229 0541	203 229 0526
Hector Aguilar	[illegible]	Oscars Abatement	estack@oscarsabatement	860-296-7450	296-7417
Ken Brown	[illegible]	Cherokee Int.	KBROWN@GREENHORNETCLEAR.COM	860-417-2085	860 417-2086
Kermit Thompson	[illegible]	DPW		860-713-5613	
Victor Uscilla	[illegible]	DPW		203-913-3648	
Peter Miccoli	[illegible]	EFP	pmiccoli@sprinkles-r-us.com	413-829-1845	

PART 1 - GENERAL

1.1 RELATED DOCUMENTS

A. Drawings and general provisions of the Contract, including General and Supplementary Conditions and Division 01 specification sections, apply to this section.

1.2 SECTION INCLUDES

A. Solid-state, PWM, VFCs for speed control of three-phase, squirrel-cage induction motors.

1.3 RELATED SECTIONS

A. Section 16478 - Transient-Voltage Suppression for Low-Voltage Electrical Power Circuits: Low-voltage power, control, and communication surge suppressors.

1.4 DEFINITIONS

A. BMS: Building management system.

B. IGBT: Integrated gate bipolar transistor.

C. LAN: Local area network.

D. PID: Control action, proportional plus integral plus derivative.

E. PWM: Pulse-width modulated.

F. VFC: Variable frequency controller.

1.5 SUBMITTALS

A. Submit under provisions of Section 01300

B. Product Data: For each type of VFC. Include dimensions, mounting arrangements, location for conduit entries, shipping and operating weights, and manufacturer's technical data on features, performance, electrical ratings, characteristics, and finishes.

C. Shop Drawings: For each VFC.

1. Include dimensioned plans, elevations, sections, and details, including required clearances and service space around equipment. Show tabulations of installed devices, equipment features, and ratings. Include the following:

    a. Each installed unit's type and details.
    b. Nameplate legends.
    c. Short-circuit current rating of integrated unit.
    d. Listed and labeled for series rating of overcurrent protective devices in combination controllers by an NRTL acceptable to authorities having jurisdiction.
    e. Features, characteristics, ratings, and factory settings of each motor-control center unit.

2. Wiring Diagrams: Power, signal, and control wiring for VFCs. Provide schematic wiring diagram for each type of VFC.

D. Coordination Drawings: Floor plans, drawn to scale, showing dimensioned layout, required working clearances, and required area above and around VFCs where pipe and ducts are prohibited. Show VFC layout and relationships between electrical components and adjacent structural and mechanical elements. Show support locations, type of support, and weight on each support. Indicate field measurements.

E. Manufacturer Seismic Qualification Certification: Submit certification that VFCs, accessories, and components will withstand seismic forces defined in Section 16071. Include the following:

1. Basis for Certification: Indicate whether withstand certification is based on actual test of assembled components or on calculation.

    a. The term "withstand" means "the unit will remain in place without separation of any parts from the device when subjected to the seismic forces specified."
    b. The term "withstand" means "the unit will remain in place without separation of any parts from the device when subjected to the seismic forces specified and the unit will be fully operational after the seismic event."

2. Dimensioned Outline Drawings of Equipment Unit: Identify center of gravity and locate and describe mounting and anchorage provisions.
3. Detailed description of equipment anchorage devices on which the certification is based and their installation requirements.

F. Qualification Data: For [manufacturer] [testing agency] [manufacturer and testing agency].

G. Field quality-control test reports.

H. Operation and Maintenance Data: For VFCs, all installed devices, and components to include in emergency, operation, and maintenance manuals. In addition to items specified in Section 01730, include the following:

1. Routine maintenance requirements for VFCs and all installed components.
2. Manufacturer's written instructions for testing and adjusting overcurrent protective devices.

I. Load-Current and Overload-Relay Heater List: Compile after motors have been installed and arrange to demonstrate that selection of heaters suits actual motor nameplate full-load currents.

J. Load-Current and List of Settings of Adjustable Overload Relays: Compile after motors have been installed and arrange to demonstrate that dip switch settings for motor running overload protection suit actual motor to be protected.

1.6 QUALITY ASSURANCE

A. Manufacturer Qualifications: A qualified manufacturer. Maintain, within 100 miles of project site, a service center capable of providing training, parts, and emergency maintenance and repairs.

B. Testing Agency Qualifications: An independent agency, with the experience and capability to conduct the testing indicated, that is a member company of the InterNational Electrical Testing Association or is a nationally recognized testing laboratory (NRTL) as defined by OSHA in 29 CFR 1910.7, and that is acceptable to authorities having jurisdiction.

1. Testing Agency's Field Supervisor: Person currently certified by the InterNational Electrical Testing Association or the National Institute for Certification in Engineering Technologies to supervise on-site testing specified in Part 3.

C. Source Limitations: Obtain VFCs of a single type through one (1) source from a single manufacturer.

D. Electrical Components, Devices, and Accessories: Listed and labeled as defined in NFPA 70, Article 100, by a testing agency acceptable to authorities having jurisdiction, and marked for intended use.

E. Comply with NFPA 70.

F. Product Selection for Restricted Space: Drawings indicate maximum dimensions for VFCs, minimum clearances between VFCs, and adjacent surfaces and other items. Comply with indicated maximum dimensions and clearances.

1.7 DELIVERY, STORAGE AND HANDLING

A. Deliver VFCs in shipping splits of lengths that can be moved past obstructions in delivery path as indicated.

B. Store VFCs indoors in clean, dry space with uniform temperature to prevent condensation. Protect VFCs from exposure to dirt, fumes, water, corrosive substances, and physical damage.

C. If stored in areas subject to weather, cover VFCs to protect them from weather, dirt, dust, corrosive substances, and physical damage. Remove loose packing and flammable materials from inside controllers; install electric heating of sufficient wattage to prevent condensation.

1.8 PROJECT CONDITIONS

A. Environmental Limitations: Rate equipment for continuous operation, capable of driving full load without derating, under the following conditions, unless otherwise indicated:

1. Ambient Temperature: 0 to 40 degrees C.
2. Humidity: Less than 90 percent (non-condensing).
3. Altitude: Not exceeding 3300 feet.

B. Interruption of Existing Electrical Service: Do not interrupt electrical service to facilities occupied by Owner or others unless permitted under the following conditions and then only after arranging to provide temporary electrical service according to requirements indicated:

1. Notify Construction Manager no fewer than two (2) days in advance of proposed interruption of electrical service.
2. Indicate method of providing temporary electrical service.
3. Do not proceed with interruption of electrical service without Construction Manager's written permission.

C. Product Selection for Restricted Space: Drawings indicate maximum dimensions for VFCs, including clearances between VFCs, and adjacent surfaces and other items. Comply with indicated maximum dimensions.

1.9 COORDINATION

A. Coordinate layout and installation of VFCs with other construction including conduit, piping, equipment, and adjacent surfaces. Maintain required workspace clearances and required clearances for equipment access doors and panels.

B. Coordinate size and location of concrete bases. Cast anchor-bolt inserts into bases. Concrete, reinforcement, and formwork requirements are specified in Section 003300.

C. Coordinate installation of roof curbs, equipment supports, and roof penetrations. These items are specified in Section 07720.

D. Coordinate features of VFCs, installed units, and accessory devices with pilot devices and control circuits to which they connect.

E. Coordinate features, accessories, and functions of each VFC and each installed unit with ratings and characteristics of supply circuit, motor, required control sequence, and duty cycle of motor and load.

1.10 EXTRA MATERIALS

A. Furnish extra materials described below that match products installed and that are packaged with protective covering for storage and identified with labels describing contents.

1. Spare Fuses: Furnish one (1) spare for every five (5) installed, but no fewer than one set of three (3) of each type and rating.
2. Indicating Lights: Two (2) of each type installed.

PART 2 - PRODUCTS

2.1 MANUFACTURERS

A. Manufacturers: Subject to compliance with requirements, provide products by one (1) of the following:
   1. Eaton Corporation; Cutler-Hammer Products.
   2. General Electric Company; GE Industrial Systems.
   3. Square D.

2.2 VARIABLE FREQUENCY CONTROLLERS

A. Description: NEMA ICS 2, IGBT, PWM, VFC; listed and labeled as a complete unit and arranged to provide variable speed of an NEMA MG 1, Design B, 3-phase induction motor by adjusting output voltage and frequency.

   1. Provide unit suitable for operation of premium-efficiency motor as defined by NEMA MG 1.

B. Design and Rating: Match load type such as fans, blowers, and pumps; and type of connection used between motor and load such as direct or through a power-transmission connection.

C. Output Rating: 3-phase; 6 to 60 Hz, with voltage proportional to frequency throughout voltage range.

D. Unit Operating Requirements:

   1. Input ac voltage tolerance of 208 V, plus or minus 5 380 to 500 V, plus or minus 10 percent.
   2. Input frequency tolerance of 50/60 Hz, plus or minus 6 percent.
   3. Minimum Efficiency: 96 percent at 60 Hz, full load.
   4. Minimum Displacement Primary-Side Power Factor: 96 percent.
   5. Overload Capability: 1.1 times the base load current for 60 seconds; 2.0 times the base load current for 3 seconds.
   6. Starting Torque: 100 percent of rated torque or as indicated.
   7. Speed Regulation: Plus or minus one (1) percent.

E. Isolated control interface to allow controller to follow control signal over an 11:1 speed range.

   1. Electrical Signal: 4 to 20 mA at 24 V.

F. Internal Adjustability Capabilities:

1. Minimum Speed: Five (5) to 25 percent of maximum rpm.
2. Maximum Speed: 80 to 100 percent of maximum rpm.
3. Acceleration: Two (2) to a minimum of 22 seconds.
4. Deceleration: Two (2) to a minimum of 22 seconds.
5. Current Limit: 50 to a minimum of 110 percent of maximum rating.

G. Self-Protection and Reliability Features:

1. Under- and overvoltage trips; inverter overtemperature, overload, and overcurrent trips.
2. Motor Overload Relay: Adjustable and capable of NEMA ICS 2, Class 10 performance.
3. Notch filter to prevent operation of the controller-motor-load combination at a natural frequency of the combination.
4. Instantaneous line-to-line and line-to-ground overcurrent trips.
5. Loss-of-phase protection.
6. Reverse-phase protection.
7. Short-circuit protection.
8. Motor overtemperature fault.

H. Automatic Reset/Restart: Attempts three (3) restarts after controller fault or on return of power after an interruption and before shutting down for manual reset or fault correction. Bidirectional autospeed search shall be capable of starting into rotating loads spinning in either direction and returning motor to set speed in proper direction, without damage to controller, motor, or load.

I. Power-Interruption Protection: To prevent motor from re-energizing after a power interruption until motor has stopped.

J. Torque Boost: Automatically varies starting and continuous torque to at least 1.5 times the minimum torque to ensure high-starting torque and increased torque at slow speeds.

K. Motor Temperature Compensation at Slow Speeds: Adjustable current fall-back based on output frequency for temperature protection of self-cooled, fan-ventilated motors at slow speeds.

L. Input Line Conditioning:
1. Do not exceed harmonic voltage and current distortion limits at point of common coupling (PCC) for general system applications, as recommended and defined by IEEE 519, unless specified otherwise in contract drawings.
2. If the calculations determine that the harmonic distortion levels are higher than the voltage and current specified, the drive manufacturer shall provide either line reactors, isolation transformers, multi-pulse drives or trap filters to meet the intent of IEEE 519.

M. VFC Output Filtering: As required by IEEE 519.

N. Status Lights: Door-mounted LED indicators shall indicate the following conditions:

1. Power on.
2. Run.

3. Overvoltage.
4. Line fault.
5. Overcurrent.
6. External fault.

O. Panel-Mounted Operator Station: Start-stop and auto-manual selector switches with manual speed control potentiometer and elapsed time meter.

P. Indicating Devices: Meters or digital readout devices and selector switch, mounted flush in controller door and connected to indicate the following controller parameters:

1. Output frequency (Hz).
2. Motor speed (rpm).
3. Motor status (running, stop, fault).
4. Motor current (amperes).
5. Motor torque (percent).
6. Fault or alarming status (code).
7. PID feedback signal (percent).
8. DC-link voltage (VDC).
9. Set-point frequency (Hz).
10. Motor output voltage (V).

Q. Control Signal Interface:

1. Electric Input Signal Interface: A minimum of two (2) analog inputs (0 to 10 V or 0/4-20 mA) and six (6) programmable digital inputs.
2. Remote Signal Inputs: Capability to accept any of the following speed-setting input signals from the BMS or other control systems:

   a. 0 to 10-V dc.
   b. 0-20 or 4-20 mA.
   c. Potentiometer using up/down digital inputs.
   d. Fixed frequencies using digital inputs.
   e. RS485.
   f. Keypad display for local hand operation.

3. Output Signal Interface:

   a. A minimum of one (1) analog output signal (0/4-20 mA), which can be programmed to any of the following:

      1) Output frequency (Hz).
      2) Output current (load).
      3) DC-link voltage (VDC).
      4) Motor torque (percent).
      5) Motor speed (rpm).
      6) Set-point frequency (Hz).

4. Remote Indication Interface: A minimum of two (2) dry circuit relay outputs (120-V ac, 1 A) for remote indication of the following:

   a. Motor running.
   b. Set-point speed reached.
   c. Fault and warning indication (overtemperature or overcurrent).
   d. PID high- or low-speed limits reached.

R. Communications: Provide an RS485 interface allowing VFC to be used with an external system within a multi-drop LAN configuration. Interface shall allow all parameter settings of VFC to be programmed via BMS control. Provide capability for VFC to retain these settings within the nonvolatile memory.

S. Manual Bypass: Magnetic contactor arranged to safely transfer motor between controller output and bypass controller circuit when motor is at zero speed. Controller-off-bypass selector switch sets mode, and indicator lights give indication of mode selected. Unit shall be capable of stable operation (starting, stopping, and running), with motor completely disconnected from controller (no load).

T. Bypass Controller: NEMA ICS 2, full-voltage, non-reversing enclosed controller with across-the-line starting capability in manual-bypass mode. Provide motor overload protection under both modes of operation with control logic that allows common start-stop capability in either mode.

U. Integral Disconnecting Means: NEMA AB 1, instantaneous-trip circuit breaker with lockable handle.

V. Isolating Switch: Non-load-break switch arranged to isolate VFC and permit safe troubleshooting and testing, both energized and de-energized, while motor is operating in bypass mode.

W. Remote Indicating Circuit Terminals: Mode selection, controller status, and controller fault.

2.3 ENCLOSURES

1. Provide front access enclosures with top or bottom cable entry. Enclosure shall conform to the following National Electrical Code Standards.
   a. 5 through 60 horsepower: NEMA 1, wall mounted.
   b. Over 60 horsepower: NEMA 1, wall or floor mounted.
2. Provide on the door of each AFC unit:
   a. Input circuit breaker or fused disconnect.
   b. Manual speed control.
   c. Three position mode switch marked as follows: Hand-Off-Automatic.
   d. A "Power On" light.
   e. A speed indicating meter.
   f. Drive fault indication

2.4 ACCESSORIES

A. Devices shall be factory installed in controller enclosure, unless otherwise indicated.

B. Push-Button Stations, Pilot Lights, and Selector Switches: NEMA ICS 2, heavy-duty type.

C. Stop and Lockout Push-Button Station: Momentary-break, push-button station with a factory-applied hasp arranged so padlock can be used to lock push button in depressed position with control circuit open.

D. Control Relays: Auxiliary and adjustable time-delay relays.

E. Standard Displays:

1. Output frequency (Hz).
2. Set-point frequency (Hz).
3. Motor current (amperes).
4. DC-link voltage (VDC).
5. Motor torque (percent).
6. Motor speed (rpm).
7. Motor output voltage (V).

F. Historical Logging Information and Displays:

1. Real-time clock with current time and date.
2. Running log of total power versus time.
3. Total run time.
4. Fault log, maintaining last four (4) faults with time and date stamp for each.

G. Current-Sensing, Phase-Failure Relays for Bypass Controller: Solid-state sensing circuit with isolated output contacts for hard-wired connection; arranged to operate on phase failure, phase reversal, current unbalance of from 30 to 40 percent, or loss of supply voltage; with adjustable response delay.

2.5 FACTORY FINISHES

A. Finish: Manufacturer's standard [Insert color] paint applied to factory-assembled and -tested VFCs before shipping.

PART 3 - EXECUTION

3.1 EXAMINATION

A. Examine areas, surfaces, and substrates to receive VFCs for compliance with requirements, installation tolerances, and other conditions affecting performance.

B. Examine roughing-in for conduit systems to verify actual locations of conduit connections before VFC installation.

C. Proceed with installation only after unsatisfactory conditions have been corrected.

3.2 APPLICATIONS

A. Select features of each VFC to coordinate with ratings and characteristics of supply circuit and motor; required control sequence; and duty cycle of motor, controller, and load.

B. Select horsepower rating of controllers to suit motor controlled.

3.3 INSTALLATION

A. Anchor each VFC assembly to steel-channel sills arranged and sized according to manufacturer's written instructions. Attach by bolting. Level and grout sills flush with mounting surface.

B. Install VFCs on concrete bases.

C. Comply with mounting and anchoring requirements specified in Section 26 05 29.

D. Controller Fuses: Install fuses in each fusible switch. Comply with requirements in Section 26 28 13.

3.4 CONCRETE BASES

A. Coordinate size and location of concrete bases. Verify structural requirements with structural engineer.

B. Concrete base is specified in Section 26 05 00, and concrete materials and installation requirements are specified in Division 03.

3.5 IDENTIFICATION

A. Identify VFCs, components, and control wiring according to Section 16075.

B. Operating Instructions: Frame printed operating instructions for VFCs, including control sequences and emergency procedures. Fabricate frame of finished metal, and cover instructions with clear acrylic plastic. Mount on front of VFC units.

3.6 CONTROL WIRING INSTALLATION

A. Install wiring between VFCs and remote devices according to Section 16123.

B. Bundle, train, and support wiring in enclosures.

C. Connect hand-off-automatic switch and other automatic-control devices where applicable.

1. Connect selector switches to bypass only manual- and automatic-control devices that have no safety functions when switch is in hand position.
2. Connect selector switches with control circuit in both hand and automatic positions for safety-type control devices such as low- and high-pressure cutouts, high-temperature cutouts, and motor overload protectors.

3.7 CONNECTIONS

A. Conduit installation requirements are specified in other Division 16 sections. Drawings indicate general arrangement of conduit, fittings, and specialties.

B. Ground equipment according to Section 16060.

3.8 FIELD QUALITY CONTROL

A. Prepare for acceptance tests as follows:

1. Test insulation resistance for each enclosed controller element, bus, component, connecting supply, feeder, and control circuit.
2. Test continuity of each circuit.

B. Manufacturer's Field Service: Engage a factory-authorized service representative to perform the following:

1. Inspect controllers, wiring, components, connections, and equipment installation. Test and adjust controllers, components, and equipment.
2. Assist in field testing of equipment including pretesting and adjusting of solid-state controllers.
3. Report results in writing.

C. Testing Agency: Owner will engage a qualified testing and inspecting agency to perform field tests and inspections and prepare test reports.

D. Testing Agency: Engage a qualified testing and inspecting agency to perform the following field tests and inspections and prepare test reports:

E. Perform the following field tests and inspections and prepare test reports:

1. Perform each electrical test and visual and mechanical inspection, except optional tests, stated in NETA ATS. Certify compliance with test parameters.
2. Correct malfunctioning units on-site, where possible, and retest to demonstrate compliance; otherwise, replace with new units and retest.

3.9 ADJUSTING

A. Set field-adjustable switches and circuit-breaker trip ranges.

3.10 DEMONSTRATION

A. Engage a factory-authorized service representative to train Owner's maintenance personnel to adjust, operate, and maintain variable frequency controllers. Refer to Section 01730.

END OF SECTION

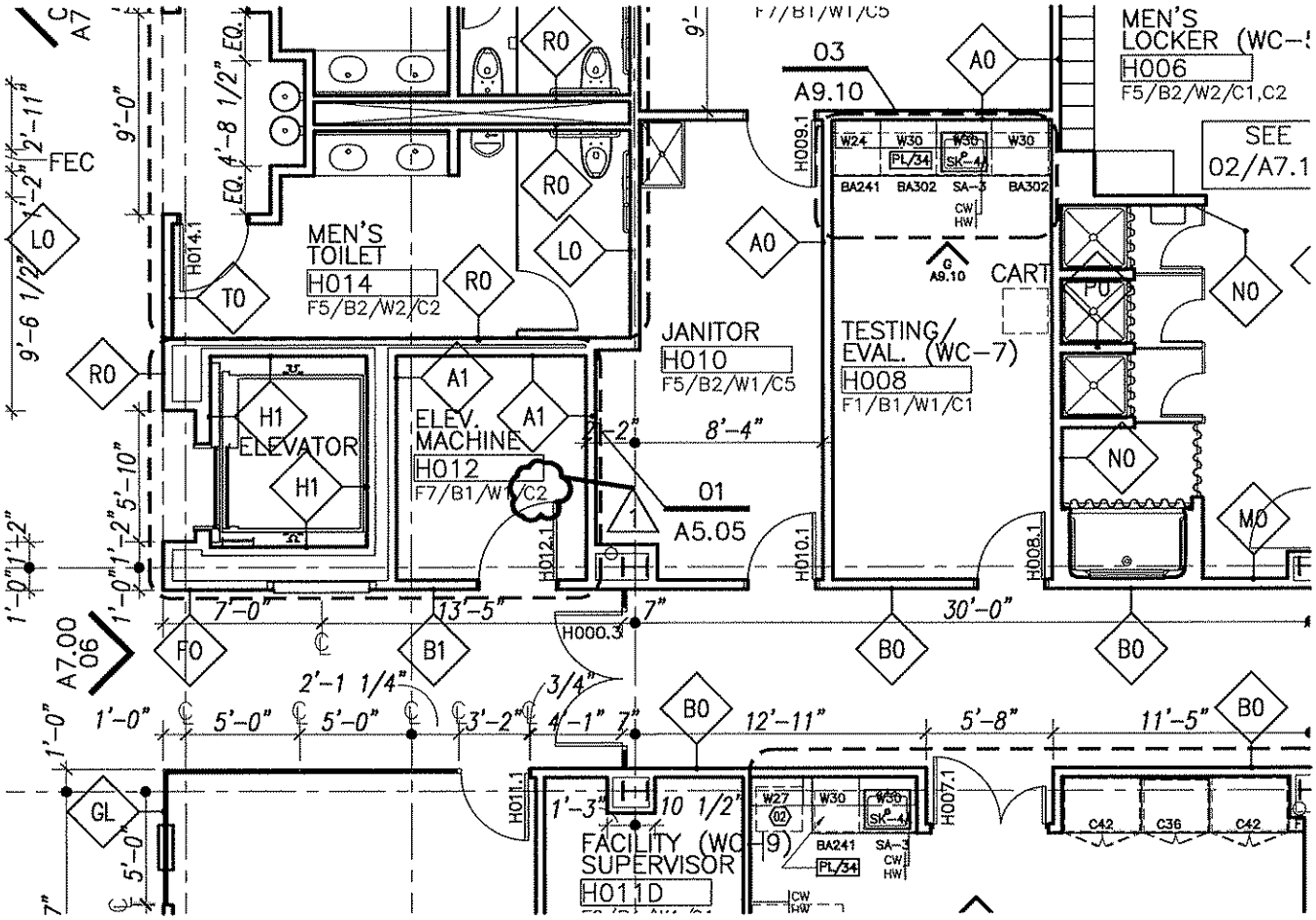

SK-A2.00-A

ADDENDUM 1: 7/15/09

NORWALK COMMUNITY COLLEGE: WEST CAMPUS DEVELOPMENT

DPW PROJECT NO. BI-CTC-406

SCALE: 1/8" = 1'-0"

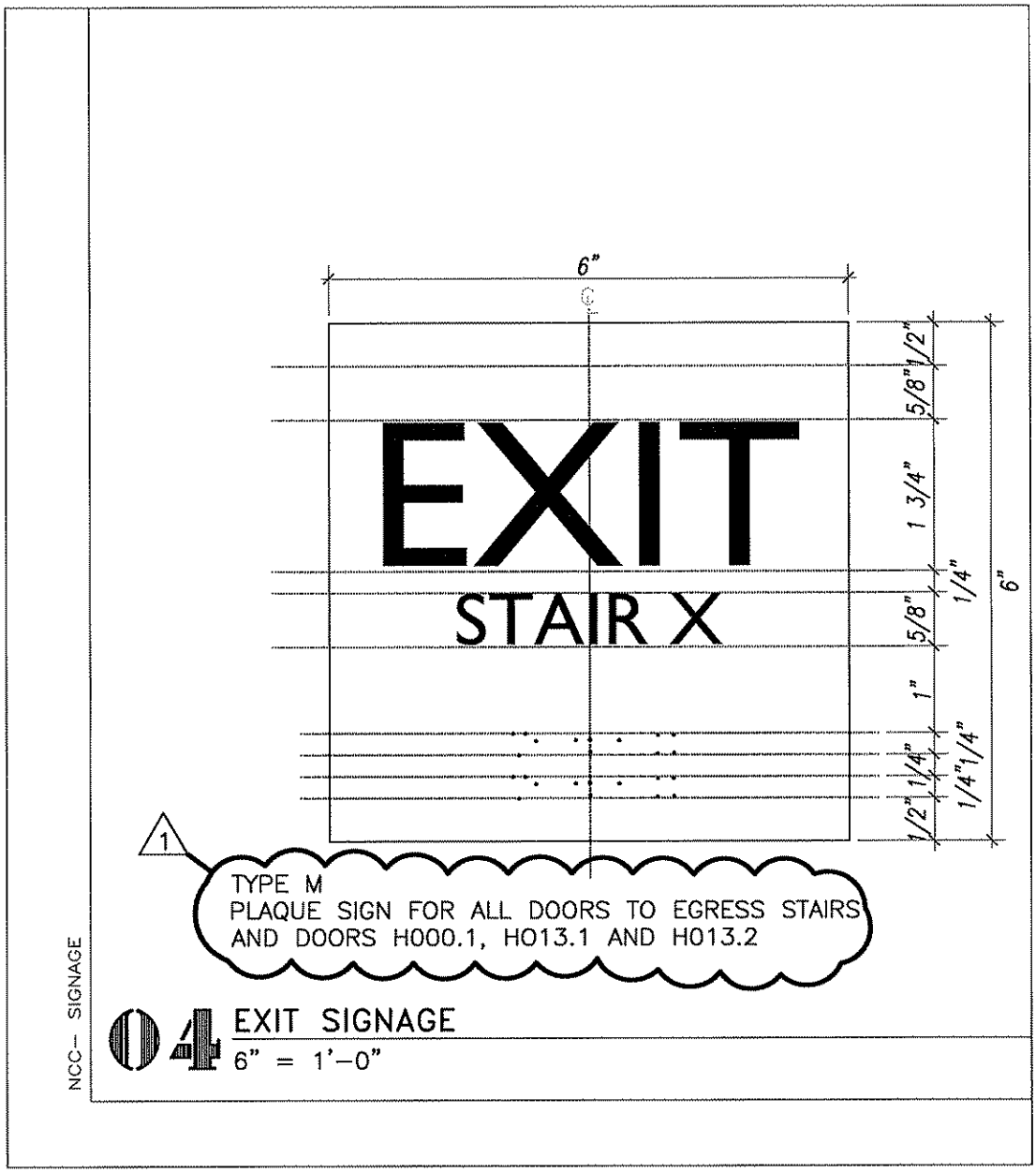

04 EXIT SIGNAGE

6" = 1'-0"

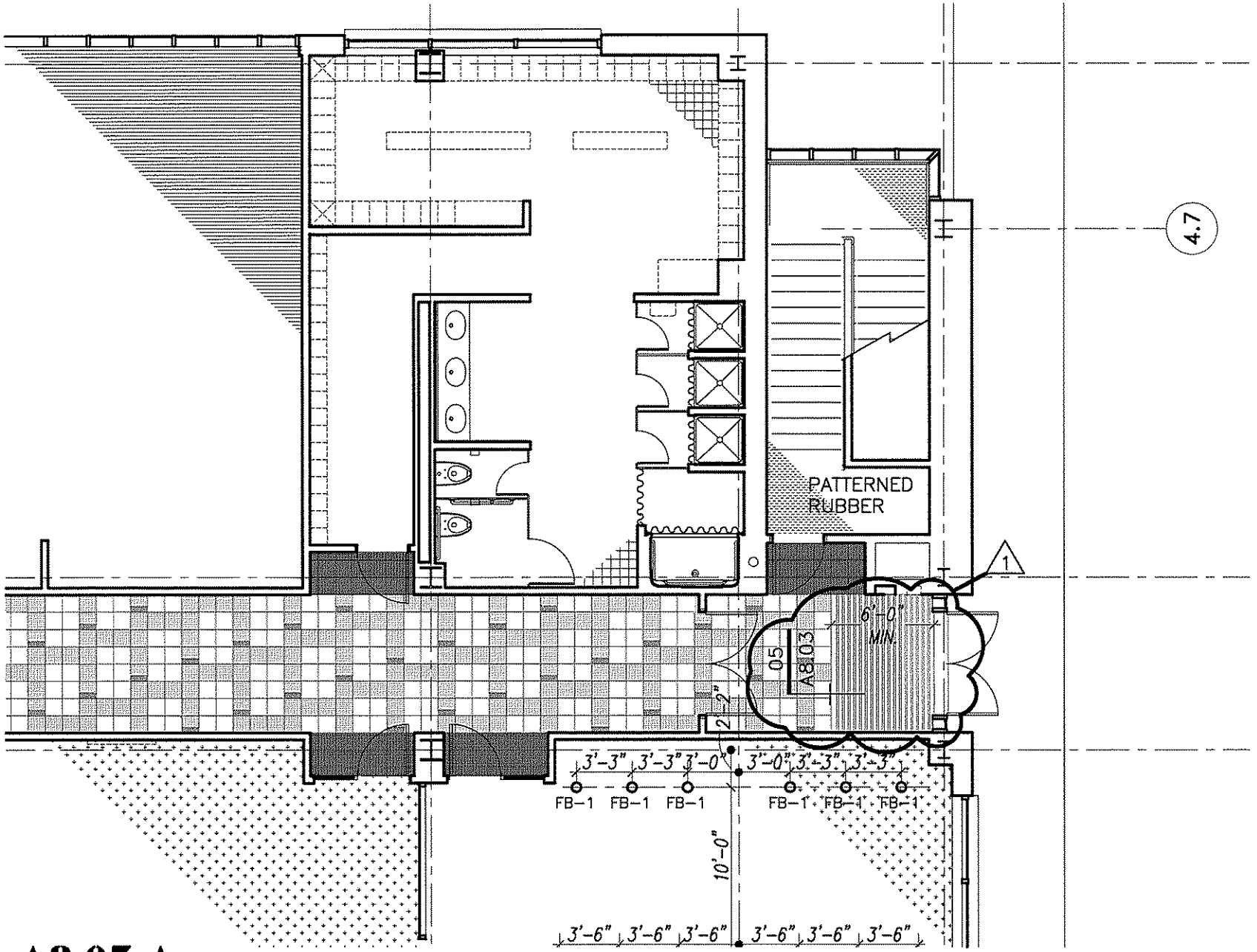

SK-A8.03-A

NORWALK COMMUNITY COLLEGE: WEST CAMPUS DEVELOPMENT

DPW PROJECT NO. BI-CTC-406

ADDENDUM 1: 7/15/09

SCALE: 1/8" = 1'-0"

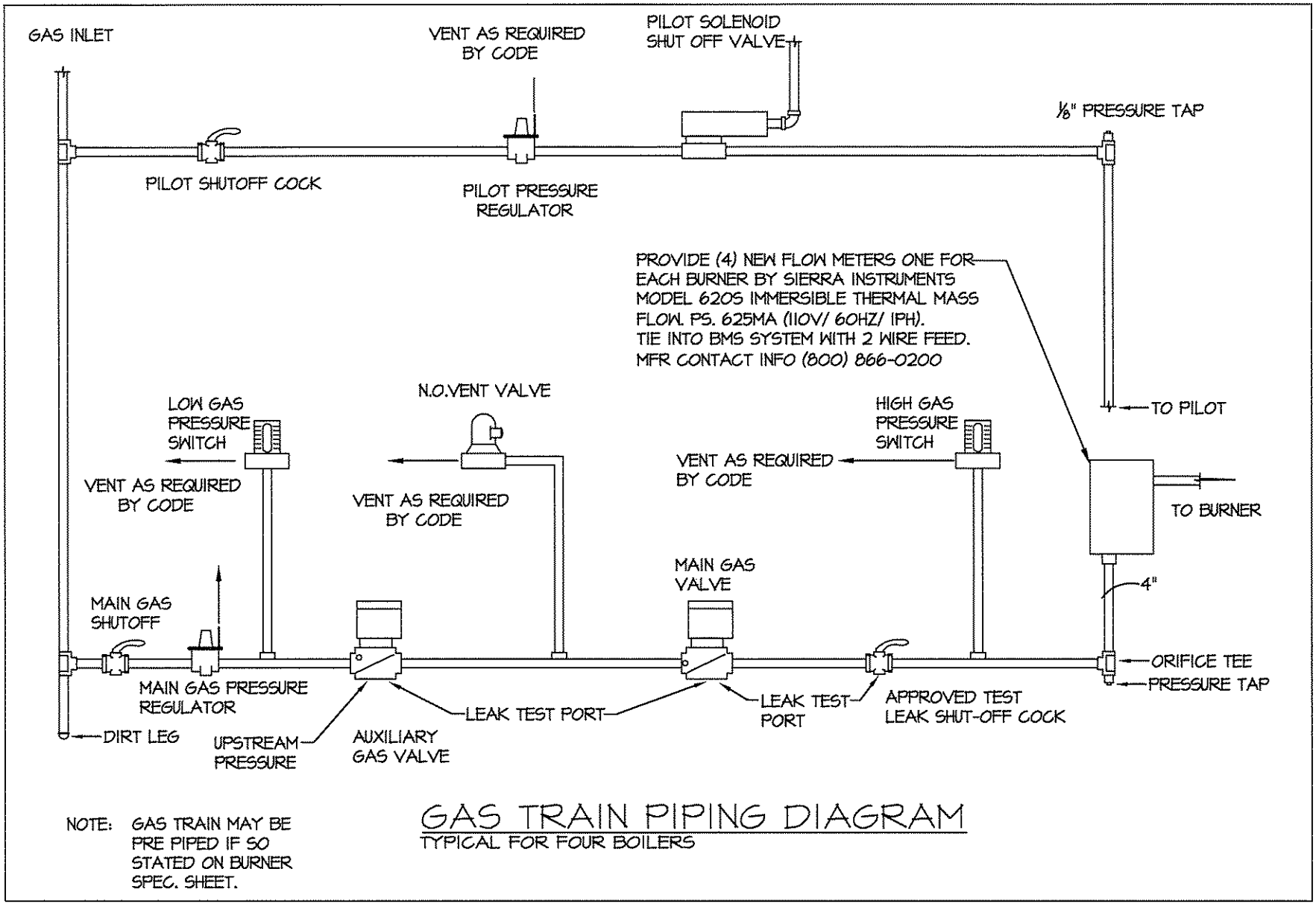

NOTE: GAS TRAIN MAY BE PRE PIPED IF SO STATED ON BURNER SPEC. SHEET.

GAS TRAIN PIPING DIAGRAM

TYPICAL FOR FOUR BOILERS

SK-M3.06-A

ADDENDUM 1: 7/15/09

NORWALK COMMUNITY COLLEGE: WEST CAMPUS DEVELOPMENT

SCALE: NTS

DPW PROJECT NO. BI-CTC-406

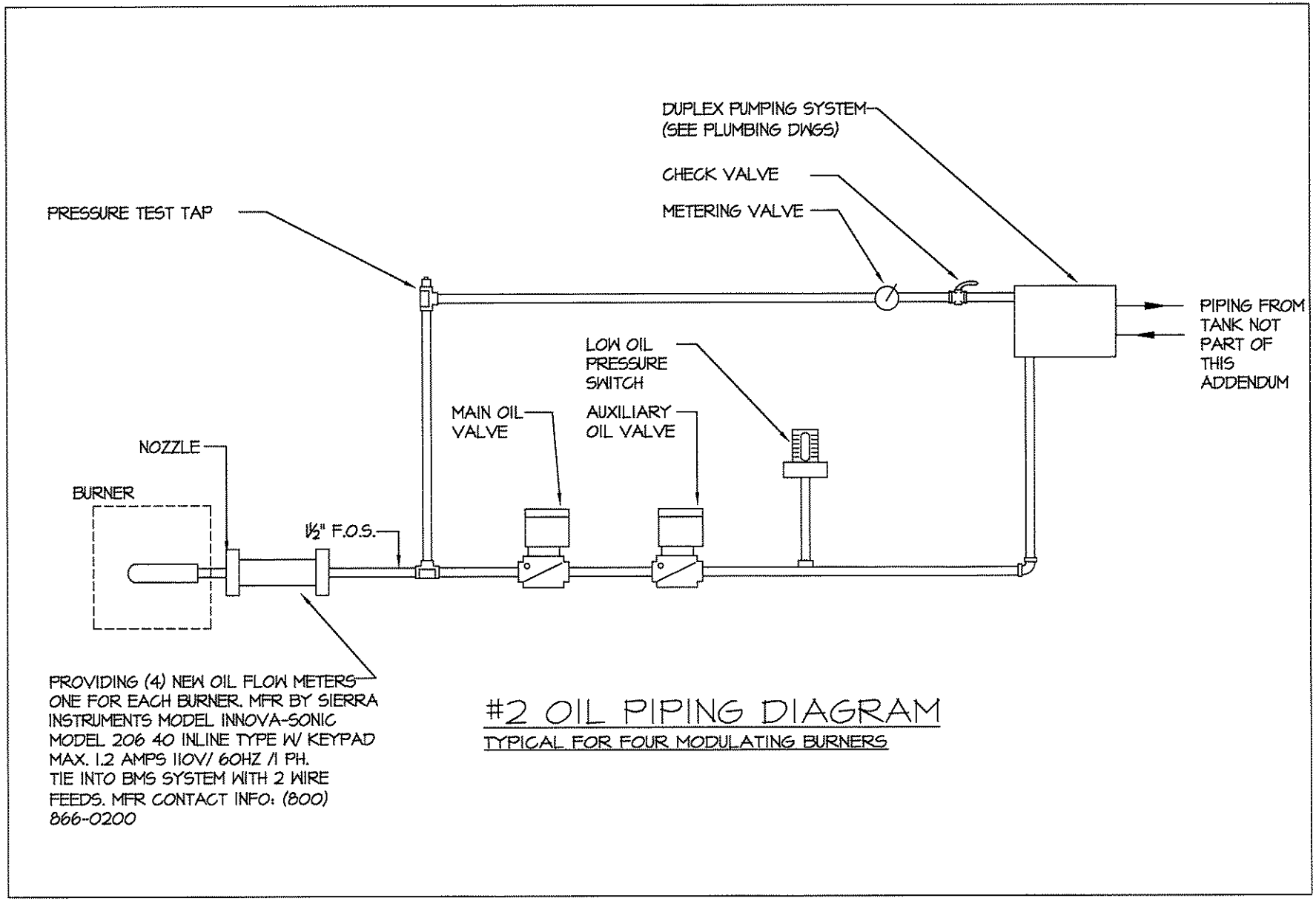

#2 OIL PIPING DIAGRAM

TYPICAL FOR FOUR MODULATING BURNERS

SK-M3.06-B

ADDENDUM 1: 7/15/09

NORWALK COMMUNITY COLLEGE: WEST CAMPUS DEVELOPMENT

SCALE: NTS

DPW PROJECT NO. BI-CTC-406

INVITATION TO BID

FOR PROJECTS ESTIMATED TO COST MORE THAN $500,000.00

INCLUDING ASBESTOS

ADV. NO.: 09-12 ADV. DATE: June 12, 2009

SEALED BIDS FROM CONTRACTORS WHO HAVE BEEN PREQUALIFIED IN THE DAS CLASSIFICATION NOTED BELOW SHALL BE ADDRESSED TO THE DEPARTMENT OF PUBLIC WORKS - STATE OF CONNECTICUT FOR:

Project Title:	Norwalk Community College – Phase II West Campus Development Norwalk, CT
Project Number:	BI-CTC-406
DAS Classification:	Group B – General Building Construction
Special Requirement:	This project includes Asbestos Abatement
Cost Estimate Range:	$22,943,500. – $25,358,600.
Plans & Specs Ready Date:	June 17, 2009
A NON-REFUNDABLE FEE OF PER SET IS REQUIRED	$185.00 Checks should be made payable to "TREASURER, STATE OF CONNECTICUT" and should include the prospective bidder's correct mailing address, telephone and fax numbers of where addendum(a) should be submitted. USE A SEPARATE CHECK FOR EACH PROJECT.
Examination or Purchase of Plans & Specs	Plans and specifications are available during the hours of 7:30 A.M. to 5:00 P.M. (Monday-Friday) and must be ordered from JOSEPH MERRITT, 650 FRANKLIN AVENUE, HARTFORD, CT 06114. Please phone Joseph Merritt when planning to purchase at 860-296-2500.
Pre-Bid Conference:	All prospective bidders are encouraged to attend a pre-bid conference
Pre-Bid Conference Time	to be held AT 10:30 A.M.
Pre-Bid Conference Date	ON June 30, 2009
Pre-Bid Conference Location	AT Norwalk Community College, 188 Richards Avenue, Norwalk, CT, West Campus Cafeteria
Pre-Bid Conference Contact	Rose Ellis, Dean of Administration, (203) 857-7202
BID OPENING DATE:	August 12, 2009
Receipt of Bid Package	Bids will be received at the State Office Building, 165 Capitol Avenue, Hartford, CT, 06106 in Room No. G-36 UNTIL 1:00 P.M. on the date shown above and thereafter publicly opened and read aloud in Room No. G-32.

Bid Results:	Bid results are posted on the DPW Website in approximately two (2) days after the bid opening date.
Set-Aside Participation	25%
Including MBE/WBE	6.25%
Gift And Campaign Contribution Certification	If awarded the subject contract and the contract has a value of $50,000 or more the contractor will be required to sign and submit, at the time of contract execution, a Gift And Campaign Contribution Certification. See the DPW home page, http://www.ct.gov/dpw, click on Affidavits. For the purposes of signing the Certification, the "date DPW began planning" the subject project or services is such date noted below.
Date DPW Began Planning the Subject Project:	5/29/03
Summary and Affidavit Regarding State Ethics	Any one seeking a contract with a value of more than $500,000 shall provide with their bid an Ethics Affidavit *located* at CT DPW Website (www.ct.gov/dpw). Failure to provide this affidavit with the bid proposal shall result in rejection of the bid.
Bid Security	As *security*, each bid must be accompanied by a CERTIFIED CHECK made payable to "Treasurer, State of Connecticut," or the bid must be accompanied by a BID BOND, in the form required by the awarding authority and having surety thereto such Surety Company or Companies as are authorized to do business in this State and/or accepted by the Commissioner of the Department of Public Works for an amount not less than 10% of the bid.
Bidders are advised that *both* the DEPARTMENT OF ADMINISTRATIVE SERVICES PREQUALIFICATION CERTIFICATE and UPDATE STATEMENT must accompany the *bid* proposal for projects *estimated* to *exceed* Five Hundred Thousand Dollars ($500,000.00) (C.G.S. 4b-91 as amended). *Failure to supply them with the bid will result in rejection of the bid*	
Department of Administrative Services (DAS) Contractor Prequalification Program: http://www.das.state.ct.us/busopp.asp	
To access Executive Orders http://www.ct.gov/governorrell/cwp/browse.asp?a=1719&bc=0&c=18433	
To access the Department of Public Works Web Site: http://www.ct.gov/dpw	

Performance and Labor and Material Bonds to be furnished by the bidder awarded the contract shall be an amount not less than 100% of the contract price.

The awarding authority reserves the right to waive technical defects or to reject any and all bids.

Nonresident contractors: At the time of contract signing a certificate from the Commissioner of Revenue Services must be provided which evidences that C.G.S. 12-430 for non-resident contractors has been met. For details call the Department of Revenue Services at (860) 541-3280, ext. 7.

EXECUTIVE ORDERS:

The Contract is subject to the provisions of Executive Order No. Three of Governor Thomas J. Meskill, promulgated June 16, 1971, concerning labor employment practices, Executive Order No. Seventeen of Governor Thomas J. Meskill, promulgated February 15, 1973, concerning the listing of employment openings and Executive Order No. Sixteen of Governor John G. Rowland promulgated August 4, 1999, concerning violence in the workplace, all of which are incorporated into and are made a part of the Contract as if they had been fully set forth in it. At the Contractor's request, the Client Agency shall provide a copy of these orders to the Contractor. The Contract may also be subject to Executive Order No. 7C of Governor M. Jodi Rell, promulgated July 13, 2006, concerning contracting reforms and Executive Order No. 14 of Governor M. Jodi Rell, promulgated April 17, 2006, concerning procurement of cleaning products and services, in accordance with their respective terms and conditions.

This contract is subject to the provisions of the Department of Public Works Sexual Harassment Policy ("Policy") and, as such, the contract may be canceled, terminated, or suspended by DPW for violation of or noncompliance with said Policy. Said document is hereby incorporated herein by reference and made a part hereof as though fully set forth herein. This policy may be found at the Department of Public Works Website at http://www.ct.gov/dpw, click Publications and scroll to Sexual Harassment Policy.

All technical questions must be in writing (not phoned or emailed) and faxed to the Architect/Engineer with a copy to the DPW Project Manager listed below.

Architect/Engineer/ Consultant:	Jan Keane Mitchell/Giurgola Architects, LLP 630 Ninth Avenue, Suite 711 New York, NY 10036	Fax No:	212-866-5006
	Fletcher-Thompson, Inc. 3 Corporate Drive Shelton, CT 06484	Fax No:	203-225-6800
Asbestos Abatement Consultant	Fuss & O'Neill EnviroScience, LLC 146 Hartford Road Manchester, CT 06040	Fax No.	860-649-6883
Construction Administrator	Jeff Fogel LiRo Program &Construction Management, P.C. 3 Aerial Way Syosset, NY 11791	Fax No:	516-996-1883
DPW Project Manager:	Joel Baranowski 165 Capitol Avenue, Rm. 463 Hartford, CT 06106	Fax No:	860-713-7261

All bid questions should be addressed to the Purchasing Officer listed below.

Associates Fiscal Administrative Officer:	Mellanee Walton	Fax No:	(860) 713-7395

Contract Time Allowed: 910 Calendar Days

Liquidated Damages: $ 3,593.00 Per Calendar Day beyond Substantial Completion

$ 2,493.00 Per Calendar Day beyond ninety (90) days after Substantial Completion

Prevailing Wage Rates: Prevailing wages are required on this project, in accordance with the schedule provided in the bid documents, pursuant to Connecticut General Statutes Section 31-53 (a) through (h), as amended.

Each contractor who is awarded a contract on or after October 1, 2002 shall be subject to provisions of the Connecticut General Statutes, Section 31-55a concerning annual adjustments to prevailing wages.

Wage Rates will be posted each July 1st on the Department of Labor website: www.ctdol.state.ct.us . Such prevailing wage adjustment shall not be considered a matter for any contract amendment.

The wages paid on an hourly basis to any mechanic, laborer or workman employed upon the work herein contracted to be done and the amount of payment or contribution paid or payable on behalf of each such employee to any employee welfare fund, as defined in subsection (h) of section 31-53 of the Connecticut General Statutes, shall be at a rate equal to the rate customary or prevailing for the same work in the same trade or occupation in the town in which such public works project is being constructed. Any contractor who is not obligated by agreement to make payment or contribution on behalf of such employees to any such employee welfare fund shall pay to each employee as part of his wages the amount of payment or contribution for his classification on each pay day.

Procurement
Department of Public Works