Curtain Walls
supported by
Cold-Formed Steel Framing

Prepared for State of Connecticut - DPS

Presented by:
Jonathan Humble, AIA, American Iron and Steel Institute

American Iron and Steel Institute

1

The Steel Framing Alliance is a Registered Provider with the American Institute of Architects Continuing Education Program. Credit earned on completion of this program will be reported to CES Records for AIA members. Certificates of Completion for non-AIA members are available on request.

This program is registered with the AIA/CES for continuing professional education. As such, it does not include content that may be deemed or construed to be an approval or endorsement by the AIA of any material of construction or any method or manner of handling, using, distributing, or dealing in any material or product. Questions related to specific materials, methods, and services will be addressed at the conclusion of this presentation.

SFA802 – 3.0 LUs/HSW
3.0 PDH

Copyright Material

This presentation is protected by US and International copyright laws.
Reproduction, distribution, display and use of the presentation, in whole or part, without written permission of the speaker and the Steel Framing Alliance is prohibited.

Steel Framing Alliance
2008

3

Curtain Walls
supported by
Cold-Formed Steel Framing

- Definitions & System Overview
- Load Path and Design Criteria
- Member & System Design using the Wall Stud Standard & Curtain Wall Design Guide (AISI publications)
- Brick Veneer special detailing
- Fire, Energy and Inspection Requirements
- Available Resources

4

Definition: Cold-Formed Steel

- "That type of construction made up entirely or in part of steel structural members cold formed to shape from sheet or strip steel such as roof deck, floor and wall panels, studs, floor joists, roof joists and other structural elements."

5

Definition: Curtain Wall

- *Not defined* in the State Building Code.
- Non-load bearing wall: "Any wall that is not a load-bearing wall." (International Building Code)

6

Definition: Curtain Wall

- AISI Standard "Wall Stud Design" defines curtain wall as: "A wall that transfers lateral (transverse) loads and is limited to a superimposed vertical load, exclusive of sheathing materials, of not more than 100 lb/ft (1460 N/m), or a superimposed vertical load of not more than 200 lbs (890 N)."

7

Definition: Load Bearing Wall

- "Any wall meeting either of the following classifications: (1) Any metal stud wall that supports more than 100 pounds per linear foot …of vertical load in addition to its own weight…."

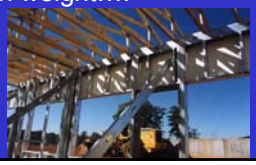

8

Codes and Standards

- 2005 CT State Building Code
- 2006 ICC-IBC (As needed)
- AISI Standards
- AISI Guides
- Other standards and guides

9

Reference Standard

- North American Specification for the Design of Cold-Formed Steel Structural Members
- Previously referred to as the "Cold-Formed Specification"

10

Reference Guide

- Cold-Formed Steel Framing Design Guide
- #CF02-1

Reference Guide

- Steel Stud Brick Veneer Design Guide
- #CF03-1

Curtain Wall System Overview

- Wall Studs
- Runner Tracks
- Bracing Members
- Opening Framing
  - Jambs, Heads, Sills; sometimes headers
- Slip and fixed connections
- Connections
  - With structure, other framing, and cladding

13

Studs, Track, & other wall components

- Steel framing industry moving away from using the term "gauge" to refer to thickness of material.
- Thickness expressed in "mils" or "inches":
- One mil = 1/1000 inch.
- Basic information is on inside front cover of SSMA catalog.

PRODUCT IDENTIFICATION

All SSMA products have a four part identification code which identifies the size (both depth and flange width), style, and material thickness of each member.

EXAMPLE:

MEMBER DEPTH:
*(Example: 6" = **600** × 1/100 inches)*
All member depths are taken in 1/100 inches. For all "T" sections member depth is the inside to inside dimension.

FLANGE WIDTH:
*(Example: 1 5/8" = 1.625" = **162** × 1/100 inches)*
All flange widths are taken in 1/100 inches.

600 S 162 - 54

STYLE:
*(Example: Stud or Joist section = **S**)*
The four alpha characters utilized by the designator system are:
S = Stud or Joist Sections
T = Track Sections
U = Channel Sections
F = Furring Channel Sections

MATERIAL THICKNESS:
*(Example: 0.054 in. = **54** mils; 1 mil = 1/1000 in.)*
Material thickness is the minimum base metal thickness in mils. Minimum base metal thickness represents 95% of the design thickness.

Standardization

600	S	162	- 54
6" member depth	Stud or Joist with Lips	1-5/8" Flange (1.625")	Min. base metal thickness in mils (0.054" = 54 mils)

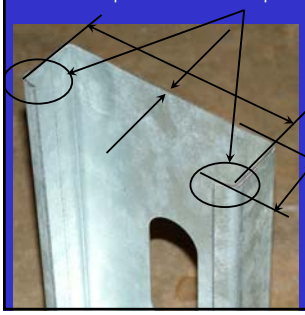

- Steel Members are Standardized Using a Universal Designation System

16

Note: For those sections where two different yield strengths (33 ksi and 50 ksi) are shown, the yield strength used in the design, if greater than 33 ksi, needs to be identified on the design and ordering of steel. (i.e., 600S162-54 (50 ksi))

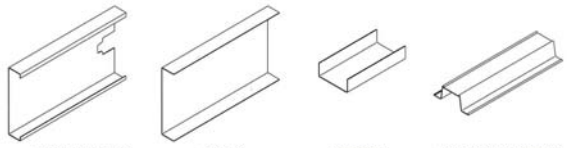

C-STUD / JOIST	TRACK	CHANNEL	FURRING CHANNEL
S-SECTIONS	*T-SECTIONS*	*U-SECTIONS*	*F-SECTIONS*

Copyright © 2001 by the Steel Stud Manufacturers Association

17

Member Depth:

- Measured on studs: outside flanges.
- Measured on tracks: inside flanges.

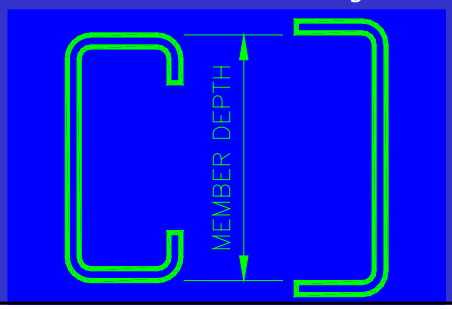

18

Member Thickness

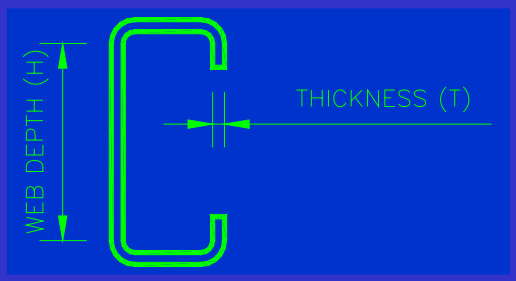

19

Thickness — Steel Components

Minimum Thickness[1] (mils)	Design Thickness (in)	Inside Corner Radii (in)	Reference Only Gauge No.
18	0.0188	0.0843	25
27	0.0283	0.0796	22
30	0.0312	0.0781	20 - Drywall
33	0.0346	0.0764	20 - Structural
43	0.0451	0.0712	18
54	0.0566	0.0849	16
68	0.0713	0.1069	14
97	0.1017	0.1525	12

[1] Minimum Thickness represents 95% of the design thickness and is the n
A3.4 of the 1996 AISI Specification.

20

Design Stiffening Lip Length

Section	Flange Width	Design Stiffening Lip Length (in)
S125	1 1/4"	0.188
S137	1 3/8"	0.375
S162	1 5/8"	0.500
S200	2"	0.625
S250	2 1/2"	0.625

21

Typical Wall Construction

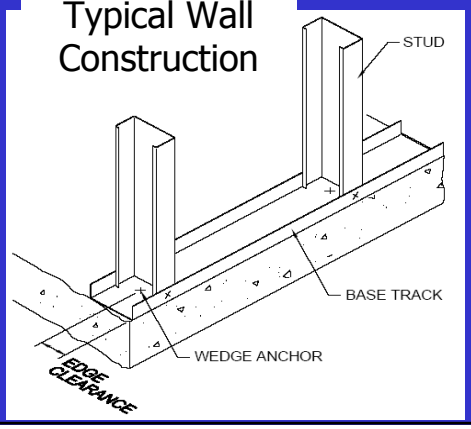

22

Wall Stud Bracing

- One of the most important aspects of all cold-formed steel construction is bracing.
- Bracing:
  - Prevents twisting of the member.
  - Prevents lateral translation of the member.
  - Resists overall buckling of the member.

23

Wall Stud Bracing

- Types of Bracing:
  - Sheathing
  - All Steel
- All steel bracing:
  - Through the punchout
  - Strapping on flanges

24

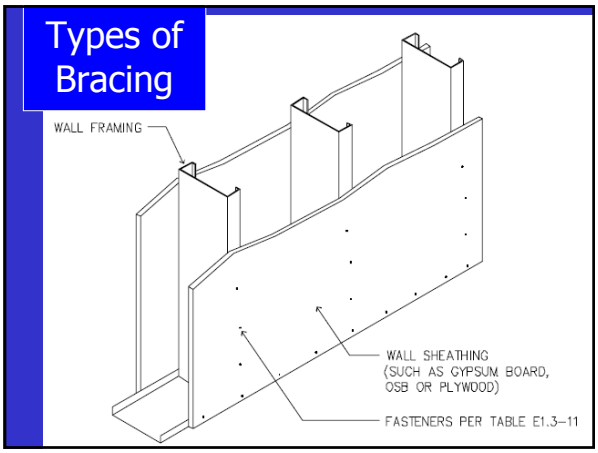
Types of Bracing
WALL FRAMING
WALL SHEATHING (SUCH AS GYPSUM BOARD, OSB OR PLYWOOD)
FASTENERS PER TABLE E1.3-11

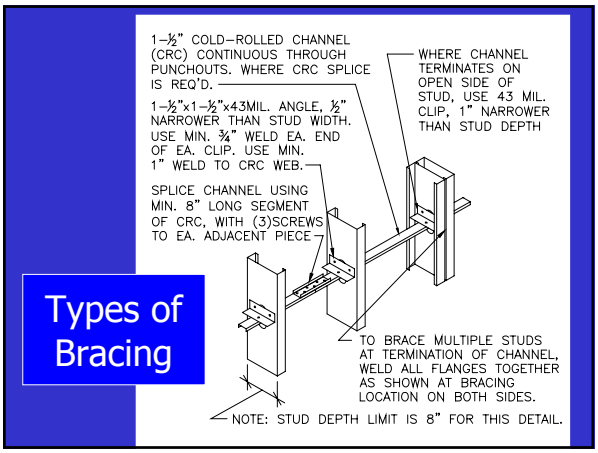
Types of Bracing
1-½" COLD-ROLLED CHANNEL (CRC) CONTINUOUS THROUGH PUNCHOUTS. WHERE CRC SPLICE IS REQ'D.
1-½"x1-½"x43MIL. ANGLE, ½" NARROWER THAN STUD WIDTH. USE MIN. ¾" WELD EA. END OF EA. CLIP. USE MIN. 1" WELD TO CRC WEB.
SPLICE CHANNEL USING MIN. 8" LONG SEGMENT OF CRC, WITH (3)SCREWS TO EA. ADJACENT PIECE
WHERE CHANNEL TERMINATES ON OPEN SIDE OF STUD, USE 43 MIL. CLIP, 1" NARROWER THAN STUD DEPTH
TO BRACE MULTIPLE STUDS AT TERMINATION OF CHANNEL, WELD ALL FLANGES TOGETHER AS SHOWN AT BRACING LOCATION ON BOTH SIDES.
NOTE: STUD DEPTH LIMIT IS 8" FOR THIS DETAIL.

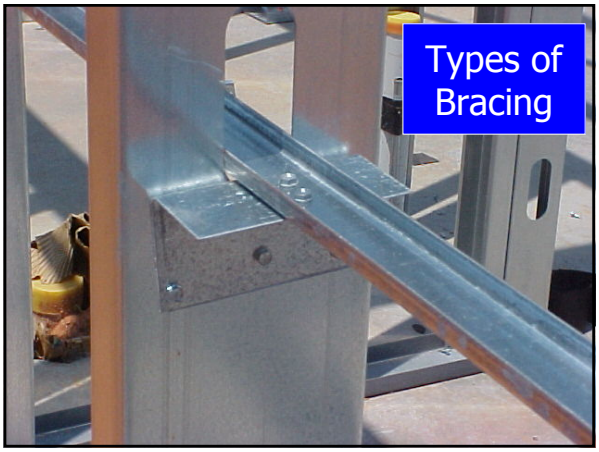
Types of Bracing

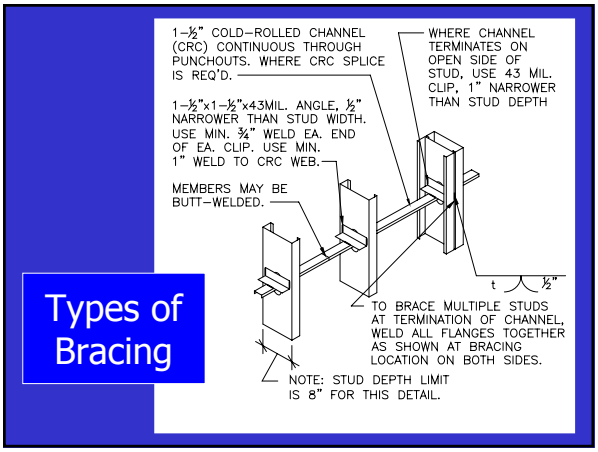
Types of Bracing
1-½" COLD-ROLLED CHANNEL (CRC) CONTINUOUS THROUGH PUNCHOUTS. WHERE CRC SPLICE IS REQ'D.
1-½"x1-½"x43MIL. ANGLE, ½" NARROWER THAN STUD WIDTH. USE MIN. ¾" WELD EA. END OF EA. CLIP. USE MIN. 1" WELD TO CRC WEB.
MEMBERS MAY BE BUTT-WELDED.
WHERE CHANNEL TERMINATES ON OPEN SIDE OF STUD, USE 43 MIL. CLIP, 1" NARROWER THAN STUD DEPTH
t
½"
TO BRACE MULTIPLE STUDS AT TERMINATION OF CHANNEL, WELD ALL FLANGES TOGETHER AS SHOWN AT BRACING LOCATION ON BOTH SIDES.
NOTE: STUD DEPTH LIMIT IS 8" FOR THIS DETAIL.

Types of Bracing

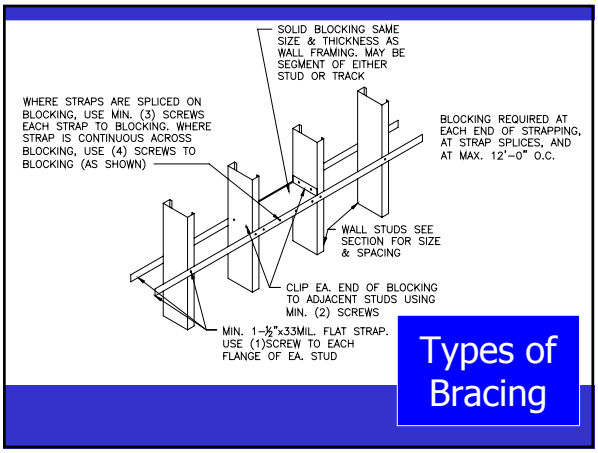
SOLID BLOCKING SAME SIZE & THICKNESS AS WALL FRAMING. MAY BE SEGMENT OF EITHER STUD OR TRACK
WHERE STRAPS ARE SPLICED ON BLOCKING, USE MIN. (3) SCREWS EACH STRAP TO BLOCKING. WHERE STRAP IS CONTINUOUS ACROSS BLOCKING, USE (4) SCREWS TO BLOCKING (AS SHOWN)
BLOCKING REQUIRED AT EACH END OF STRAPPING, AT STRAP SPLICES, AND AT MAX. 12'-0" O.C.
WALL STUDS SEE SECTION FOR SIZE & SPACING
CLIP EA. END OF BLOCKING TO ADJACENT STUDS USING MIN. (2) SCREWS
MIN. 1-½"x33MIL. FLAT STRAP. USE (1)SCREW TO EACH FLANGE OF EA. STUD
Types of Bracing

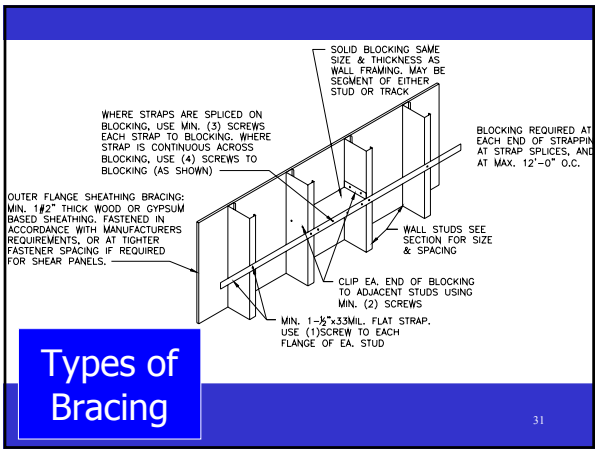

Types of Bracing

31

Wall Blocking, also used as Bracing

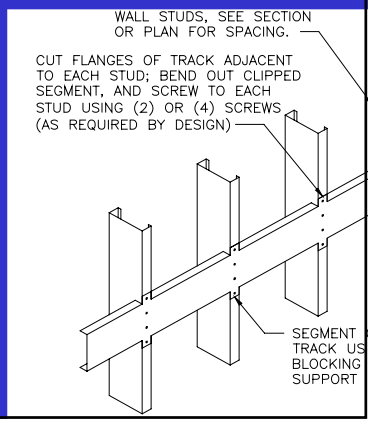

Gable Curtain Wall

With bypass parapet

Infill Curtain Wall

34

Steel Framed Parapet

Curtain Walls

supported by
Cold-Formed Steel Framing

- Definitions and System Overview
- Load Path and Design Criteria
- Member & System Design using the Wall Stud Standard & Curtain Wall Design Guide (AISI publications)
- Brick Veneer special detailing
- Fire, Energy and Inspection Requirements
- Available Resources

36

Load Path & Design Criteria

- Load Path
  - Infill of Bypass (Type of system)
  - Tributary Area (Fenestration openings)
  - Lateral loads
    - Wind
    - Seismic
    - Other items to consider are thermal loads and movement of the primary frame

37

Load Path & Design Criteria

- Connecticut State Building Code
  - Chapter 22, Steel
  - Chapter 16, Structural Design
  - Referenced AISI Standards

38

Building Code: Chapter 22

SECTION 2210
COLD-FORMED STEEL
LIGHT-FRAMED CONSTRUCTION

2210.1 General. The design, installation and construction of cold-formed carbon or low-alloy steel, structural and nonstructural steel framing, shall be in accordance with the *Standard for Cold-Formed Steel Framing—General Provisions, American Iron and Steel Institute* (AISI-General) *and* AISI-NASPEC.

2210.2 Headers. The design and installation of cold-formed steel box and back-to-back headers, and double L-headers used in single-span conditions for load- carrying purposes shall be in accordance with the *Standard for Cold-Formed Steel Framing—Header Design*, American Iron and Steel Institute (AISI-Header), subject to the limitations therein.

2210.3 Trusses. The design, quality assurance, installation and testing of cold-formed steel trusses shall be in accordance with the *Standard for Cold-Formed Steel Framing–Trusses*, American Iron and Steel Institute (AISI-Truss), subject to the limitations therein.

Other Standards

- In accordance with alternative materials, design and methods of construction and equipment, the following may be used by design professionals when approved:
- AISI Wall Stud Design standard
- AISI Cold-Formed Steel Framing Design Guide
- AISI Steel Stud Brick Veneer Design Guide

40

New standards

- Wall Stud
- Lateral Design

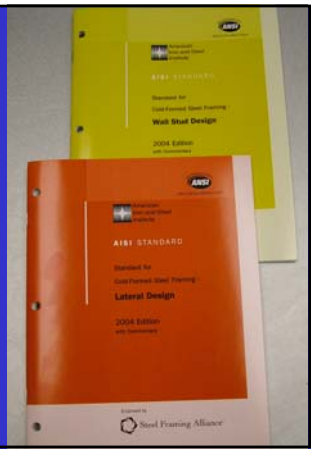

AISI Wall Stud Standard

- NASPEC does not contain:
- Load combinations beyond ASCE-7.
- Provisions for design with sheathing.
- Stud to track design.
- Deflection track connections.
- Remember, the NASPEC is a member design standard whereas, the Wall Stud Standard is an assembly design standard.

42

AISI Lateral Design Stand.

- NASPEC does not cover:
- Providing in-plane lateral resistance design requirements for shear walls and diaphragms.
- Remember, the NASPEC is a member design standard whereas, the Lateral Design Standard is an assembly design standard.

43

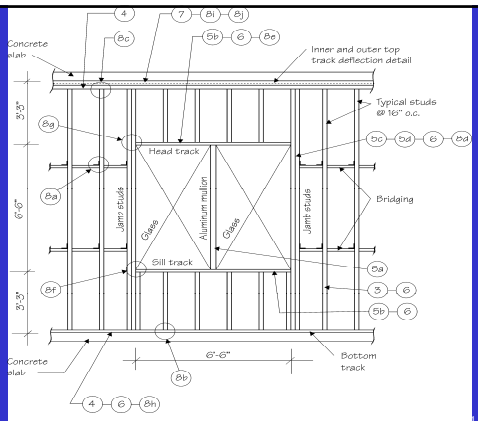

Infill Curtain Wall

45

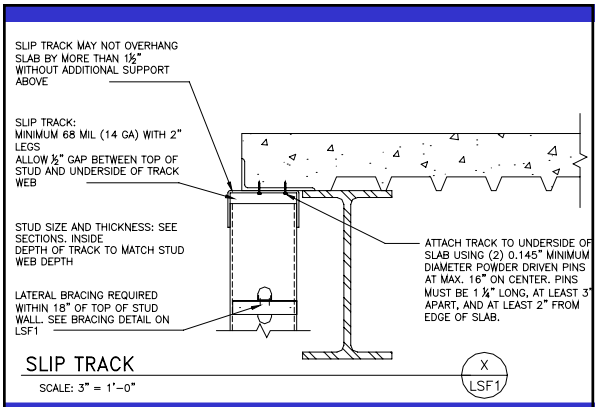

46

Bypass Curtain Wall

47

Bypass Curtain Wall

48

Curtain Walls
supported by
Cold-Formed Steel Framing

- Definitions and System Overview
- Load Path and Design Criteria
- Member & System Design using the Wall Stud Standard & Curtain Wall Design Guide (AISI publications)
- Brick Veneer special detailing
- Fire, Energy and Inspection Requirements
- Available Resources

49

We will cover

- Some of the details and equations of the wall stud standard
- Background
- Use for design
- Curtain wall design example from the AISI Wall Stud Design Guide (CF02-1)

50

Four Sections in the Wall Stud Standard:

- General
- Loads and Load Combinations
- Design
- Installation

51

General section of Wall Stud Standard:

- Scope
- Terms
- Reference Documents

52

Terms:

- Dead Load
- Seismic Loads
- Wind Loads
- Others loads that require engineering judgment: Thermal loads, primary frame movement, etc.

53

Dead Load:

- The weight of materials of construction incorporated into the building, including but not limited to walls, floors, roofs, ceilings stairways, built-in partitions, finishes, cladding, and other similarly incorporated architectural and structural items, and fixed service equipment, including the weight of cranes. All dead loads are considered permanent loads.
- (Building Code - Chapter 16)

54

Seismic Loads:

- Loads that are typically lateral forces applied to the members due to the acceleration of the wall assembly mass during an earthquake.
- (CFSEI Tech Note 542)

55

Wind Loads:

- Loads that are the most typical controlling design force on a curtain wall assembly. They are codified according to wind velocity regions.
- (CFSEI Tech Note 542)

56

Thermal Loads:

- Thermal loads or stresses can be manifested typically in two ways;
- 1) axial forces induced by the member's tendency to shrink or elongate under temperature change, while being restrained within a larger, very stiff and dimensionally stable primary frame; or

57

Thermal Loads (cont):

- 2) bending forces induced by thermal bow which could be caused by thermal couple action of an exterior assembly subject to significant exterior to interior temperature differences.
- (CFSEI Tech Note 542)

58

Primary Frame Movement

- Several different building movements pose concerns for the design of curtain wall framing; story sway, torsional displacement, creep and shrinkage, gravity load and deflection.

59

Reference Documents

- North American Specification for the Design of Cold-Formed Steel Structural Members

Reference Documents

- AISI Standard for Cold-Formed Steel Framing – General Provisions

General Provisions

- Provides additional requirements beyond the NASPEC (Link to other AISI standards)
- Definitions used in subsequent standards (Wall stud, lateral, header,etc)
- Coating thicknesses
- Identification of framing members
- Manufacturing tolerances
- Installation tolerances

62

Reference Documents

- ASCE 7-02: Minimum Design Loads for Buildings and Other Structures

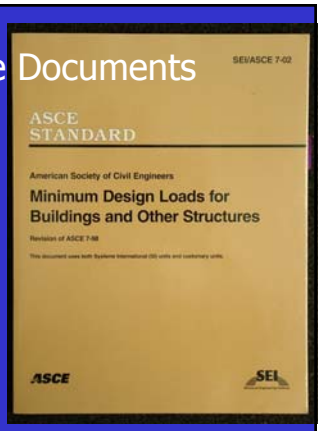

Four Sections in the Wall Stud Standard:

- General
- Loads and Load Combinations
- Design
- Installation

64

Load Combinations

- The loads and load combinations to be used in the design of cold-formed steel wall studs shall be as established by
- the **applicable building code (e.g. CT-State Bldg. Code)**, or by
- **ASCE 7** in the absence of an applicable building code,
- **except as modified in this section.**

65

Load Combinations

- The design of the wall studs shall be based on the following design wind loading considerations:
  - Combined bending and axial strength based on Main Wind Force Resisting System (MWFRS) wind loads. (Section 1605)
  - Bending strength based on Components and Cladding (C&C) wind loads. (Section 1609)
  - **Deflection limits based on 70% of Components and Cladding (C&C) wind loads with no axial loads.**

66

Load Combinations

- Where does this last provision come from?
- Wall Stud Standard Commentary states: "The commentary to Appendix B of ASCE 7-98 (Both ASCE-7 1998 & 2002) section B1.2 states in part: *Use of factored wind load in checking serviceability is exclusively conservative. The load combination with an annual probability of 0.05 of being exceeded, which can be used in checking short-term effects, is D + 0.5L + 0.7W."*

67

Load Combinations

- One of the most important load combinations of this standard comes in Section C, Design, rather than in section B, Load Combinations.
- It is found in section C 3, Member Design, under the heading "Sheathing Braced Design"

68

Four Sections in the Wall Stud Standard:

- General
- Loads and Load Combinations
- Design
- Installation

69

Design Section of the Wall Stud Standard:

- C1: Materials
- C2: Corrosion Protection
- C3: Member Design
- C4: Connection Design
- C5: Bracing
- C6: Serviceability

70

C3 Member Design

Wall studs shall be designed either on the basis of an all steel design or on the basis of sheathing braced design.

Both solid webs or webs with holes that satisfy the limits of the Specification shall be permitted.

71

Brief Excursion into NASPEC:

1. Holes: where they are permitted, referenced, and restricted
2. Ratio of the depth of a member's web (h) to the thickness of the element (t).
   - Not to be confused with w/t, which will be discussed more in this afternoon's session on Section Properties

72

Where does the NASPEC address holes?

- In calculating the effective widths of elements:
  - B 2.2: Uniformly Compressed Stiffened Elements with Circular Holes
  - B 2.4: C-Section Webs with Holes under Stress Gradient
- Flexural member strength (C3):
  - Strength for Shear Only (C3.2.1; C3.2.2)
  - Strength for Web Crippling (C3.4.1; C3.4.2)

73

Limits on Holes from NASPEC: (sections B2.4, C3.2.2, C3.4.2)

(1) $d_0 / h < 0.7$
(2) $h / t \leq 200$
(3) Holes centered at mid-depth of the web
(4) Clear distance between holes ≥ 18 in. (457 mm)
(5) Non-circular holes, corner radii ≥ 2t
(6) Non-circular holes, $d_0 \leq 2.5$ in. (64 mm) and $b \leq 4.5$ in. (114 mm)
(7) Circular hole diameters ≤ 6 in. (152 mm)
(8) $d_0 > 9/16$ in. (14 mm)

74

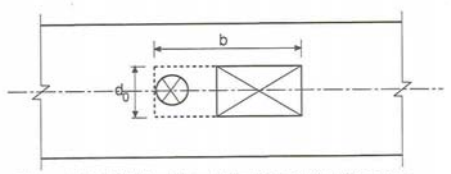

Figure C-B2.4-1 Virtual Hole Method for Multiple Openings

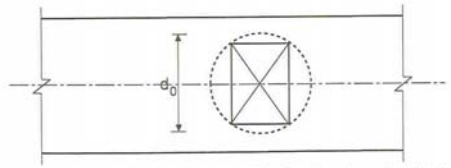

Figure C-B2.4-2 Virtual Hole Method for Opening Exceeding Limit

75

Holes

- Based on these limits, section B2.4 allows a designer to calculate effective widths of webs to determine strength and serviceability.
- With these same limits, section C3.2.2 allows a designer to calculate shear strength of webs with holes, and section C3.4.2 permits web crippling calculations with web holes.

76

Web Depth to Thickness

- Note that the 2nd requirement for holes in all three sections was that the h/t ratio did not exceed 200.
- h/t limit of 200 is also expressed in section B1.2 of the specification for members with unreinforced webs.

77

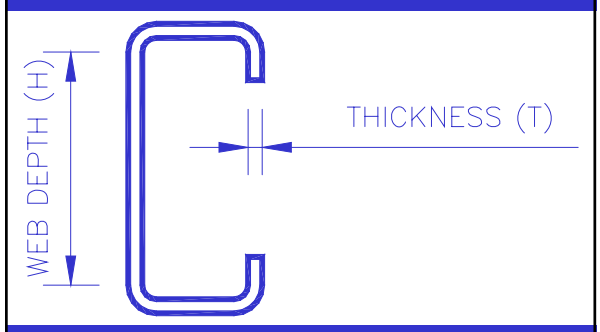

78

What are some typical h/t values? (target h/t ≤ 200)

- Sample calculation:
  - 362S162-33:
    - 3.625″ – 2(0.0346″+0.0764″) = 3.403″ = h
    - Design Thickness = 0.0346″ = t
    - h/t = 98.4 < 200 O. K.

Design Thickness

Inside corner radius

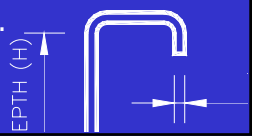

Thickness — Steel Components

Minimum Thickness[1] (mils)	Design Thickness (in)	Inside Corner Radii (in)	Reference Only Gauge No.
18	0.0188	0.0843	25
27	0.0283	0.0796	22
30	0.0312	0.0781	20 - Drywall
33	0.0346	0.0764	20 - Structural
43	0.0451	0.0712	18
54	0.0566	0.0849	16
68	0.0713	0.1069	14
97	0.1017	0.1525	12

[1] Minimum Thickness represents 95% of the design thickness and is the A3.4 of the 1996 AISI Specification.

80

Design Section of the Wall Stud Standard:

- C1: Materials
- C2: Corrosion Protection
- C3: Member Design
- C4: Connection Design
- C5: Bracing
- C6: Serviceability

81

C3: Member Design

- All Steel Design

C3: Member Design

- Sheathing Braced Design

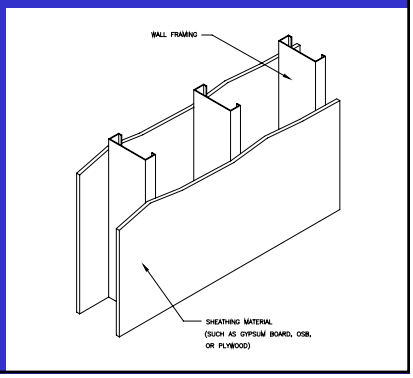

C3: Member Design

- Sheathing Braced Design
  - Engineering drawings must identify the sheathing as a structural element.
  - Any alterations to the sheathing must be reviewed and approved.
  - Assume identical sheathing attached to both sides.
  - Sheathing attached to the bottom and top horizontal members of the wall

84

C3 Member Design
Sheathing Braced Design

- Additional Load combination, evaluated *without the sheathing bracing*:
- **1.2D + (0.5L or 0.2S) + 0.2W** (Eq. C3-1)
- (D=Dead, L=Live, S=Snow, W=Wind)
  - Required only when sheathing used for bracing.
  - Is a LRFD load combination, but may conservatively be used in ASD.
  - Does not have much of an effect on curtain wall design.

85

C4: Connection Design

- Wall Stud Standard: section C4:
  - Fastening methods
  - Stud to Track Connection
  - Deflection Track Connection

86

Wall Stud Standard C4:

- Connection Design
  - C4.1 Fastening Methods
  - C4.2 Stud to track connection
  - C4.3 Deflection Track

87

Fastening Methods

- Screw connections
  - In AISI specification; section E4.
  - Tabulated values on p. 48 of SSMA catalog.

Allowable Loads for Screw Connections (lbs/screw)

Steel Mils	Thickness Design (in)	Steel Properties Fy (ksi)	Fu (ksi)	No. 12 Dia. = 0.216 (in) Shear	Pullout	No. 10 Dia. = 0.190 (in) Shear	Pullout	No. 8 Dia. = 0.164 (in) Shear	Pullout	No. 6 Dia. = 0.138 (in) Shear	Pullout
18	0.0188	33	45					66	39	60	33
27	0.0283	33	45					121	59	111	50
30	0.0312	33	45			151	76	141	65	129	55
33	0.0346	33	45			177	84	164	72	151	61
43	0.0451	33	45	280	124	263	109	244	94	224	79
54	0.0566	33	45	394	156	370	137	344	118		
68	0.0713	33	45	557	196	523	173				

88

Fasteners (Screws and Welds)

Screw Table Notes

1. Screw spacing and edge distance shall not be less than 3 x d. (d = Nominal screw diameter)
2. The allowable loads are based on the steel properties of the members being connected, per AISI section E4.
3. When connecting materials of different steel thicknesses or tensile strength (F_u), the lowest applicable values should be used.
4. The nominal strength of the screw must be at least 3.75 times the allowable loads.
5. Values include a 3.0 factor of safety.
6. Applied loads may be multiplied by 0.75 for seismic or wind loading, per AISI A 5.1.3.
7. Penetration of screws through joined materials should not be less than 3 exposed threads. Screws should be installed and tightened in accordance with screw manufacturer's recommendations.

Allowable Loads for Screw Connections (lbs/screw)

Steel Mils	Thickness Design (in)	Steel Properties Fy (ksi)	Fu (ksi)	No. 12 Dia. = 0.216 (in) Shear	Pullout	No. 10 Dia. = 0.190 (in) Shear	Pullout	No. 8 Dia. = 0.164 (in) Shear	Pullout	No. 6 Dia. = 0.138 (in) Shear	Pullout
18	0.0188	33	45					66	39	60	33
27	0.0283	33	45					121	59	111	50
30	0.0312	33	45			151	76	141	65	129	55
33	0.0346	33	45			177	84	164	72	151	61
43	0.0451	33	45	280	124	263	109	244	94	224	79
54	0.0566	33	45	394	156	370	137	344	118		
68	0.0713	33	45	557	196	523	173				

Fastening Methods

- Stud to Track Connection: Screwed
  - Distance from the center of a fastener to the edge of any part shall not be less than 1.5 x the diameter of the fastener (d).
  - The distance between centers of fasteners shall not be less than 3d.
  - ("d" = diameter)

90

Fastening Methods

- Stud to Track Connection: Screwed
  - When the distance to an end of the connected part is parallel to the line of applied force, the nominal shear strength per screw (P_{ns}):

$$P_{ns} = teF_u$$

Where: Pns = Nominal shear strength/screw
Fu = Tensile strength
t = part thickness
e = distance from center of screw to edge, along line of force.

  - Ω (Factor of Safety) = 3.0 for ASD; or
  - Φ (Resistance Factor) = 0.5 for LRFD.

91

Stud to Track: Screwed

- For uplift loads, these provisions could come into play; especially if screw is not centered vertically, or stud not fully seated.

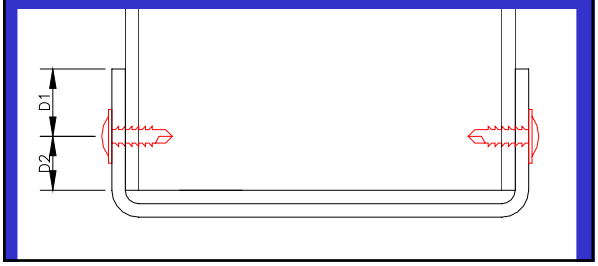

Stud to Track Connection: Screw

- Most common
- Most data
- Relative ease
- Field fix
- Removal

93

Fastening Methods

- Other methods:
  - Clinch
  - Weld
  - Bolting (not typical or efficient, but permitted)
  - Crimp (used only on very thin members)
  - Pin

94

Fastening Methods: Clinch

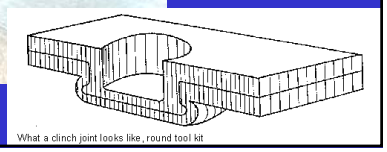

Fastening Method: Welds

- The Connecticut State Building Code, and AISI Standards, reference the American Welding Society standard D1.3 "Structural Welding Code-Sheet Steel"

96

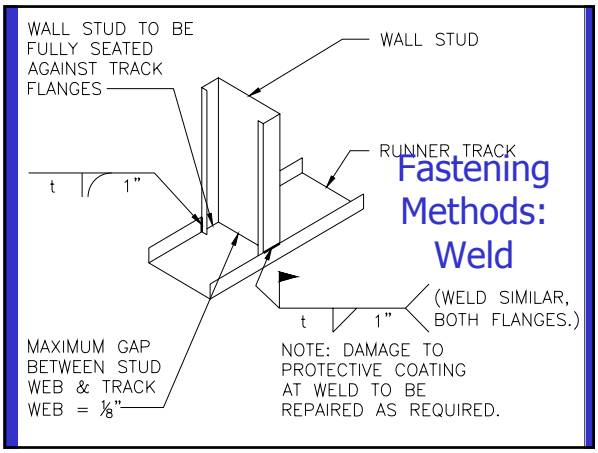

Fastening Methods: Weld

98

Fastening Methods: Weld

Fastening Methods: Weld

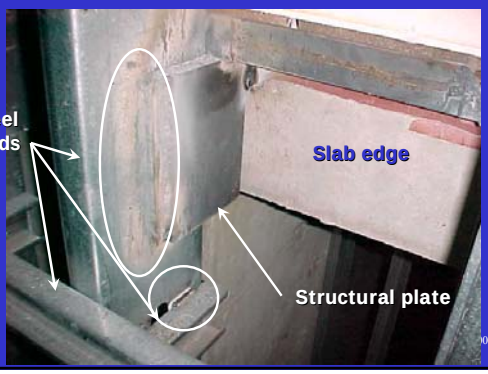

Fastening Methods

- Although pin connections have been used for steel-to-steel connections, they are not fully proven in all framing conditions.
- Other, non traditional methods:
  - Adhesives
  - Tape
  - Specially designed staple
  - Rivets

101

Web Crippling: C4.2

- Example will be given from the AISI design guide.
  - Punchout away from track support.
  - When near opening or joint in track, 50% reduction required.

102

Web Crippling: C4.2 for Curtain Wall Studs

a) Track thickness $\geq$ stud thickness; both flanges attached to track.
b) Track thickness is less than the stud thickness; lesser of C4.2a or the following: $P_{nst} = 0.6\ t_t\ w_{st}\ F_{ut}$ (*Eq.* C4.2-2) (Where P_{nst}=Nominal strength stud-track connection, T_t=track thickness, W_{st}=20T_t+0.56coefficient)
c) Curtain wall studs adjacent to openings: 0.5 factor applies, in addition to Ω and Φ
d) For no flange connection

103

Jamb connection

- Detail on next slide shows an anchor to the bottom of a slab in a track.
- More for shear and uplift, but can also be used to control web crippling.
- When you satisfy the requirement for web crippling in the wall stud standard, you will prevent punch-through in the track when same thickness material is used.

104

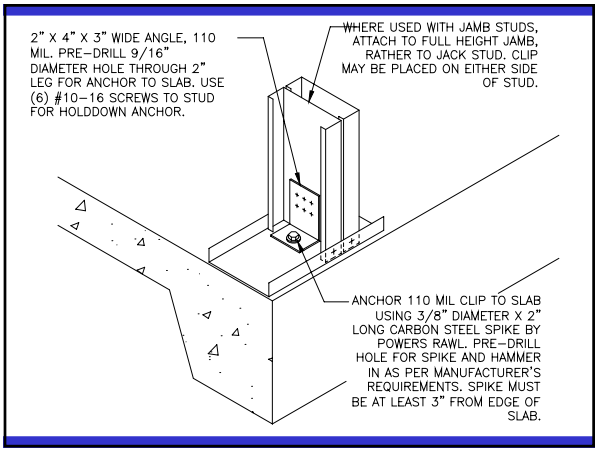

Track Thickness

- General rule of thumb: when walls are stick-built in the field, use same mil thickness for wall studs and wall tracks.
- Use same track size, style and thickness for head and sill members around openings, to avoid confusion at site.
- Only with shop-built wall panels should one vary track thickness and leg length.

106

Deflection Track

- Example.
  - End restraint
  - Bracing detailing
- What happens when deflection track will not work?
  - Heavier track
  - Specialty clips
  - Specialty Track

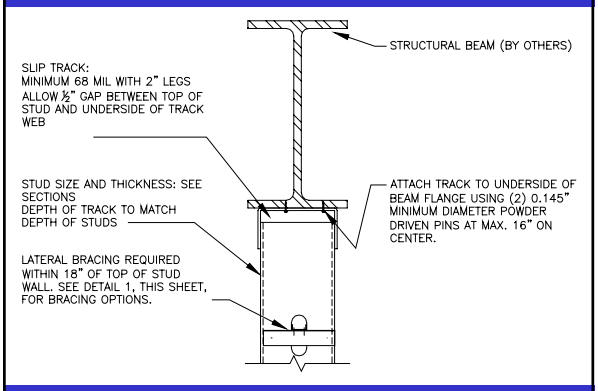

108

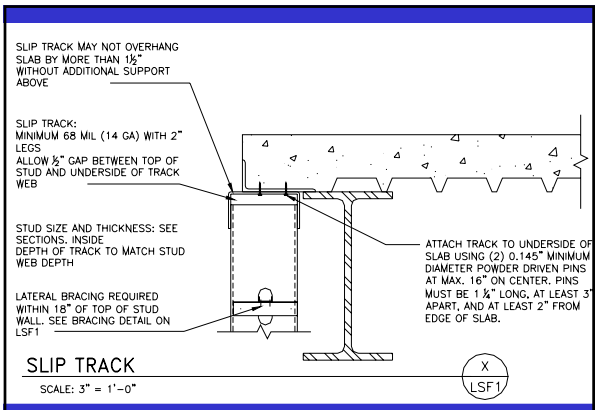

109

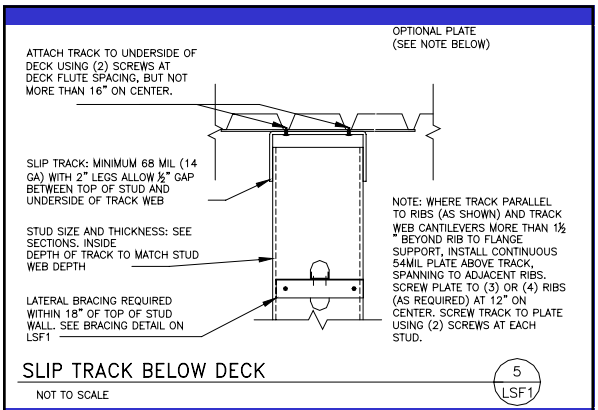

110

C4.3: Applicability Limits for Deflection Track

- Stud & Track Thickness: 33, 43, 54, 73 mil
- Stud & Track Design Yield: 33 & 50 ksi
- Member Depth: 3.5″ to 6″
- Flange Widths permitted:
  - Studs: 1-5/8″ flange to 2-1/2″ flange.
  - (S162 to S250)
  - Tracks: 2″ flange to 3″ flange. (T200 to T300)

111

C5: Bracing

- We will review some of the detailing required to:
  - Support forces in flanges for both translation and rotation
  - Resolve this brace force, either into the main structure, or into other components of the wall system that will then take forces to the structure.

112

Serviceability/Deflection

- Typically serviceability concerns may include overall movement, vibration, visual considerations, or member deflections.
- Deflection limits are most often determined per the architectural finishes.

113

Deflection Listing

- Brick: L/600 or more
- Exterior Finish and Insulation System: L/240 to L360
- Exterior Cement Plaster or Stucco: L/360
- Metal Panel: L180 to L240
- Stone: L360 to L600
- (Advisory only, and not absolute)

114

C6: Serviceability

- We have discussed deflection.
- Next we will cover several wall finish systems, with a special focus on brick veneer systems, and go into more detail on serviceability requirements there.

115

Four Sections in the Wall Stud Standard:

- General
- Loads and Load Combinations
- Design
- Installation

116

D: Installation

- General Provisions
- Permitted gap between end of stud and track:
  - Loadbearing studs: 1/8", when flanges are fully seated.
  - Non-loadbearing studs: ¼", in accordance with section D1 of the wall stud standard.

117

Fully Seated: Gen. Provisions

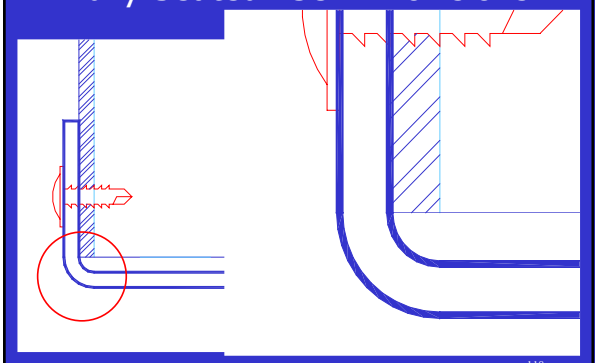

118

CF02-1: Example 1 - Curtain Wall

- Height = 13'
- Spacing = 16" o.c.
- Nominal wind load = 28 psf
- Deflection Limit = L/360

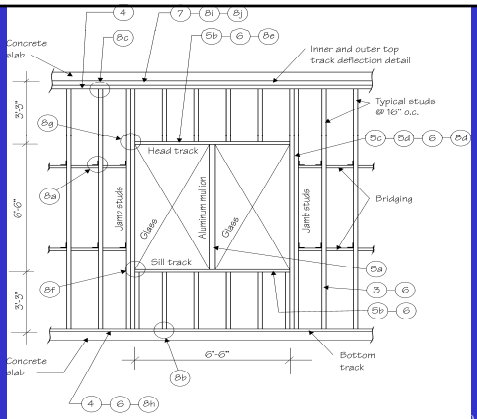

Design Guide CF02-1

- Recommended 600S162-43, F_y = 33 ksi (based on two rows of bridging).
- But, 1/3 stress increase for dead + wind load was permitted. AISI Specification in Section A5.1.3 addressed this by the application of a 0.75 factor.
- The 1/3 stress increase is no longer permitted in IBC and therefore the AISI (2001) does not permit the 0.75 for dead + wind loads. Multiple loads, other than dead load is permitted to be multiplied by 0.75.

121

Check 600S162-43 (F_y = 33 ksi)

Applied Moment = w $L^2/8$ = 28psf (16″/12)(13′)^2/8

= 789 ft.-lbs = 9.46 in.-kips

M_{axo} = 13.03 in.-kips (with punchout)

= 16.71 in.-kips (without punchout)

Okay for strength check!

122

Check 600S162-43 (F_y = 33 ksi)

Deflection = 5 w L^4/384 EI_x = 0.351″

I_x = full moment of inertia = 2.316 in.^{4}

w = 28 psf x 16″/12″/′

L = Span length = 13′ x 12″/′

E = Modulus of Elasticity = 29500 ksi

Permissible Deflection = L/360 = 0.43″

Okay for serviceability check!

123

Check Shear

Applied End Reaction:

P = 0.5 w L (spacing/12)

= 0.5 (28 psf) (13′) (16″/12) = 242 lbs

V_a = 0.95 kips (with punchout)
= 1.42 kips (without punchout)

Okay for shear!

124

Check Web Crippling

Applied End Reaction:

P = 0.5 w L (spacing/12)

= 0.5 (28 psf) (13′) (16″/12) = 242 lbs

125

Web Crippling

Using the AISI Specification:

$$P_n = Ct^2F_y \sin\theta\left(1 - C_R\sqrt{\frac{R}{t}}\right)\left(1 + C_N\sqrt{\frac{N}{t}}\right)\left(1 - C_h\sqrt{\frac{h}{t}}\right)$$

C = 4, C_R = 0.14, C_N = 0.35, C_h = 0.02,

Ω = 1.75

Note: the above value is for a web without a web opening near the support. See AISI Section C3.4.2 if a web opening is near the support.

126

Web Crippling

Using the 2001 Specification:

Design thickness = 0.043″/0.95 = 0.0451″

(Section A2.4 stipulates the requirement of 0.95 t_{design})

R/t = 0.0712″/0.0451″ = 1.58

h/t = 5.767″/0.0451″ = 127.9

N/t = 1″/0.0451″ = 22.17 (assumes N = 1″ or 600T125-43)

127

Web Crippling

If a 600T125-43 is specified and N = 1″, the stud to track gap is 0.25″.

Section D1 of the Wall Stud Standard stipulates that for curtain walls the ends of the wall studs shall be seated squarely in the track with no more than 1/4 inch gap between the end of the stud and the track.

128

Web Crippling

Using the AISI Specification:

$$P_n = Ct^2F_y \sin\theta\left(1 - C_R\sqrt{\frac{R}{t}}\right)\left(1 + C_N\sqrt{\frac{N}{t}}\right)\left(1 - C_h\sqrt{\frac{h}{t}}\right)$$

$P_a = P_n/\Omega$ = 0.453 kips/1.75 = 0.259 kips

Note: the above value is for a web without a web opening near the support. See AISI Section C3.4.2 if a web opening is near the support.

129

Web Crippling

Note: the above web crippling value is for a web without a web opening near the support.

See AISI Section C3.4.2 if a web opening is near the support:

Rc = 1.01 – 0.325(do/h) + 0.083 (x/h) ≤ 1.0

= 1.01 – 0.325(2.5″/5.767″)+(0.083(9″/5.767″)

= 0.999 = 1.0

No reduction is required for a punchout located 10″ from the end of the member to the near edge of the web punchout (per SSMA General Note).

130

Web Crippling

Using the Wall Stud Standard:

$$P_{nst} = Ct^2F_y\left(1 - C_R\sqrt{\frac{R}{t}}\right)\left(1 + C_N\sqrt{\frac{N}{t}}\right)\left(1 - C_h\sqrt{\frac{h}{t}}\right)$$

C = 3.7, C_R=Inside bend radius coef.=0.19,

C_N=Bearing length corf.=0.74,

C_h=Web slenderness coef.=0.019,

Ω = Factor of Safety = 1.70

Note: the above value is for a web without an opening near the support. See AISI Section C3.4.2 if a web opening is near a support.

131

Web Crippling

Using the Wall Stud Standard:

$$P_{nst} = Ct^2F_y\left(1 - C_R\sqrt{\frac{R}{t}}\right)\left(1 + C_N\sqrt{\frac{N}{t}}\right)\left(1 - C_h\sqrt{\frac{h}{t}}\right)$$

$P_a = P_n/\Omega$ = 0.666 kips/1.70 = 0.392 kips

Note: Using the Wall Stud Standard results in a 51% increase in web crippling design strength.

132

In This Session:

- We have covered:
  - Some of the details and equations of the wall stud standard
  - Background
  - Use for design and special conditions
  - Curtain wall design example from the AISI "Wall Stud Design Guide" (CF02-1)

133

Curtain Walls
supported by
Cold-Formed Steel Framing

- Definitions and System Overview
- Load Path and Design Criteria
- Member & System Design using the Wall Stud Standard & Curtain Wall Design Guide (AISI publications)
- Brick Veneer special detailing
- Fire, Energy and Inspection Requirements
- Available Resources

134

Steel Stud Brick Veneer (SSBV)

- AISI Steel Stud Brick Veneer Design Guide, November, 2003, CF03-1
- Brick Industry Association technical note 28b

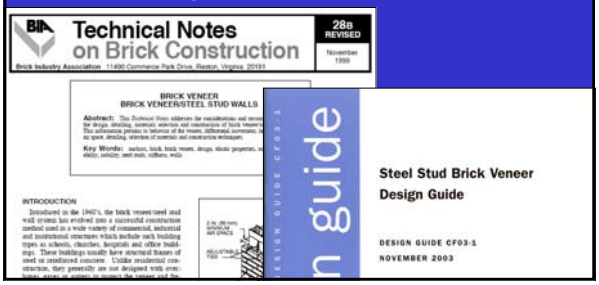

SSBV System

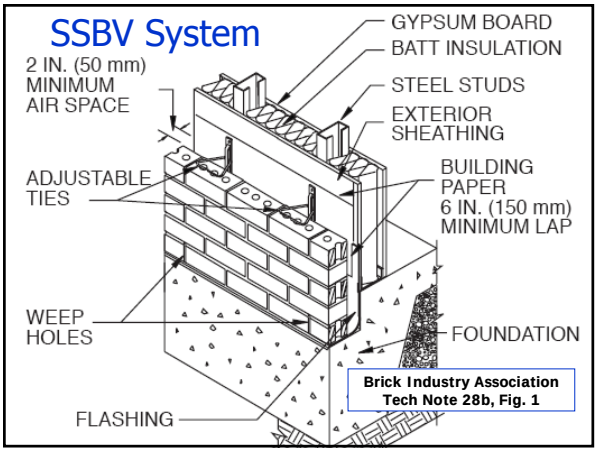

Brick Industry Association Tech Note 28b, Fig. 1

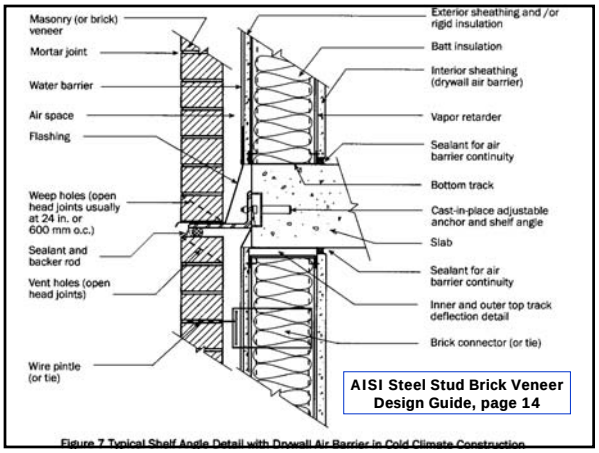

AISI Steel Stud Brick Veneer Design Guide, page 14

Figure 7 Typical Shelf Angle Detail with Drywall Air Barrier in Cold Climate Construction

AISI Steel Stud Brick Veneer (SSBV) Design Guide

138

AISI SSBV Design Guide

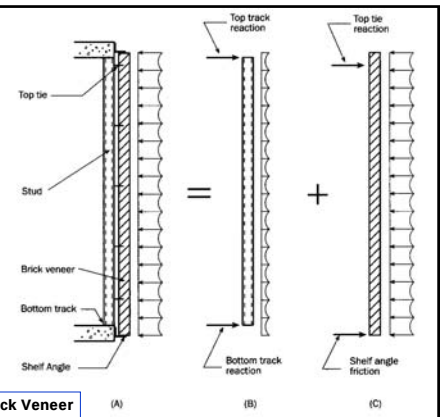

Figure 1 Distribution of Load Between Un-cracked Brick and Steel Stud Backup

AISI Steel Stud Brick Veneer Design Guide, page 3

Therefore, before cracking the brick carries 88% of the wind load and the stud carries 12%.

After Cracking: After the brick forms a midheight flexural crack, the brick is assumed to hinge at midspan and lose its ability to span from floor to floor. Testing *(Ref. 47)* and finite element studies *(Ref. 35)* have indicated that, in fact, the cracked brick retains a portion of its initial flexural strength and stiffness but this is typically ignored in design and the full wind load is applied to the steel stud backup.

2.2 Tie Loads

As illustrated in Figure 1C, the top tie acts as the end reaction for the uncracked veneer. From the previous approximate analysis before veneer cracking, the top tie carries the maximum load of:

$(0.88\ W_{total}) \times 1/2 = 0.44\ W_{total}$

AISI Steel Stud Brick Veneer Design Guide, page 5

140

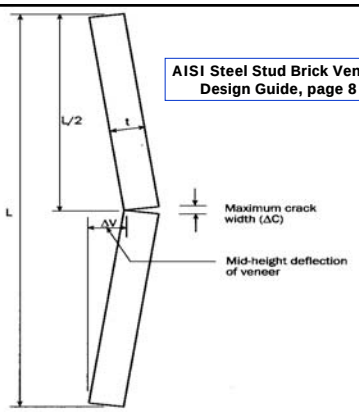

Figure 3 Schematic of Veneer Crack Width

AISI Steel Stud Brick Veneer Design Guide, page 8

141

The average crack size can be calculated as follows:

Stud flexural deflection
$= L/600 = 8.5(12)/600 = 0.170"$

One half the tie free play
$= 0.050/2 = 0.025"$

Tie load
$= 0.4 \times$ stud tributary area $\times W_{total}$
$= 0.4(8.50)(16/12)(25) = 113$ lb.

Tie deformation with 113 lb. load
$= (113/100)(0.050) = 0.057"$

ΔV = stud deflection + 1/2 tie free play + tie deformation under load
$= 0.170" + 0.025" + 0.057" = 0.252"$

$\Delta C = 4(\Delta V)(t/L) = 4(0.252)(3.50/(102)) = 0.0346"$

And the average crack width at the centerline of the veneer is given by $\Delta C/2 = 0.0346/2 = 0.017"$ which is similar in magnitude to the crack widths permitted in reinforced concrete standards.

AISI Steel Stud Brick Veneer Design Guide, page 9

AISI SSBV Design Guide: Stud Design Recommendations

- Design studs for full wind and earthquake load, ignoring any structural contribution from the brick veneer.
- Unless explicitly designed as an axial load bearing system, no axial load other than self-weight should be placed on the steel stud backup.
- L/600 Deflection limit.
- Stud design thickness: 0.0451″ (43 mil)
- G60 galvanized coating or equivalent.
- Maximum bridging spacing: 4′-0″

143

AISI SSBV Design Guide: Other Recommendations

- Brick Ties (design loads, max. deflection)
- Air Barriers and Vapor Retarders
- Exterior sheathing and insulation
- Moisture barriers
- Air Space Size (1″ min; 2″ preferred)
- Weeps and vents (Min. 2′-8″ on center)
- Other measures to control water penetration.

144

Compare to: BIA Tech Note

- Deflection is calculated assuming the entire out-of-plane load is resisted by the studs alone, neglecting contribution of the brick veneer. While a number of design tables are based on a stud deflection of stud deflection of stud span length divided by 360 (L/360), using this criterion may permit more deflection than the veneer is able to tolerate without visible cracking and resulting water damage.

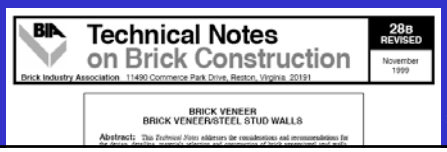
Technical Notes on Brick Construction
28B REVISED
November 1999
Brick Industry Association 11490 Commerce Park Drive, Reston, Virginia 20191
BRICK VENEER
BRICK VENEER/STEEL STUD WALLS
Abstract: This Technical Notes addresses the considerations and recommendations for

145

BIA Tech Note

- Therefore, to obtain sufficient backing stiffness, the allowable out-of-plane deflection of the studs should be restricts to L/600 using service level loads. Such deflection criterion will allow a maximum crack width of about 0.015 inches in the brick veneer wythe for typical floor-to-floor dimensions.

146

BIA Tech Note

- Recommendations:
  - L/600 deflection limit
  - Stud flange bracing by gypsum, plywood, or cement board (sheathing braced design,) or all steel design.
  - Veneer design for seismic loads in accordance with ACI 530/ASCE 5/TMS 402 *Building Code Requirements for Masonry Structures*, also known as the Masonry Standards Joint Committee (MSJC) Code

147

BIA Tech Note

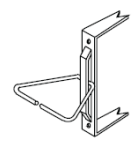
BASE & VEE TIE WITH PRONGS

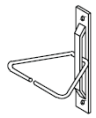
BASE & VEE TIE

Brick ties used in U. S. Construction.

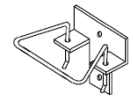
EYE & PINTLE TIE

WIRE & SCREW TIE

148

BIA Tech Note: Brick Ties

- Ties should provide the capacity to transfer loads applied to a maximum of 2 2/3 sq ft of wall area.
- Each tie should be spaced a maximum of 18 in. o.c. vertically and 32 in. o.c. horizontally.
- All ties must be embedded at least 1 1/2 in. into the brick veneer with a minimum mortar cover of 5/8 in. to the outside face of the wall.
- Ties must be securely attached to the steel studs through the sheathing, not to the sheathing alone.
- Around the perimeter of openings, additional ties should be installed spaced at a maximum of 3 ft o.c. within 12 in. of the opening.

149

BIA Tech Note: Welding Steel Studs

- Field welding of studs should not be permitted. Shop welding may be permitted on steel studs with a minimum of 68 mil thick studs.
- Welders and welding procedures should be qualified as specified in the AWS D1.3 by the American Welding Society.
- A corrosion inhibiting coating should be applied to all welded areas after welding is completed.

150

BIA Tech Note: Steel Studs

- The top connection of nonbearing studs must be detailed to prevent inadvertent vertical load transfer to the studs.
- Steel studs should be a minimum of 43 mil thick steel to provide sufficient thickness to engage the threads of the screw.

151

BIA Tech Note: Steel Studs

- Studs should have a protective coating conforming to one of the following:
  - ASTM A 653/653M with a minimum G90/Z275 coating designation
  - ASTM A 875/875M with a minimum GF90/ZGF275 coating designation.
- *(note that this differs from the G60 coating recommendations from AISI.)*

152

ASTM A653

- Standard Specification for Steel Sheet, Zinc-Coated (Galvanized) or Zinc-Iron Alloy-coated (Galvannealed) by the Hot-Dip Process
- G40 = 0.40 oz. Sq. ft.
- G60 = 0.60 oz. Sq. ft.
- G90 = 0.90 oz. Sq. ft.

153

CFSEI Tech Note D200

- Corrosion Protection for Cold-Formed Steel Framing in Coastal Areas.
- Last updated January 2007

TECHNICAL NOTE
On Cold-Formed Steel Construction

CORROSION PROTECTION FOR COLD-FORMED STEEL FRAMING IN COASTAL AREAS

CFSEI Tech Note D200

- Assessment of project building distance to the shore (salt water bodies of water).
- Building orientation and terrain.
- Assessment of classes of exposure: Enclosed, partially sheltered, exposed, etc.

155

CFSEI Tech Note D200

- Exposed conditions include exterior walls with framing fully exposed.
- Partially exposed conditions include walls where portions of the wall are exposed, but not in direct exposure.
- Enclosed conditions include walls which are sealed at both exterior and interior.

156

CFSEI Tech Note D200

- Framing that is enclosed should be adequately protected.
- Framing that is intentionally left exposed may require additional corrosion protection.
- Heavier corrosion protection may be needed when framing is exposed near coastal salt water environments and in industrial environments.

157

BIA Tech Note: Screws

- Minimum #10 self-tapping screws are recommended. Screws used to attach exterior sheathing and ties can be either carbon or stainless steel.
- Carbon steel screws should have a non-corrosive coating of zinc, polymer or composite zinc polymer. Zinc-plated screws should be either mechanical-zinc plated according to ASTM B 695 or B 633.

158

BIA Tech Note: Screws

- Stainless steel screws are acceptable even though a galvanic potential exists between the stainless steel and carbon steel. This is possible because of an area-relationship principle where the surface area of the steel stud is much larger than that of the screw which results in a decreased corrosion potential.
- Copper-coated screws are not recommended since they can react galvanically with steel studs having zinc coatings.

159

BIA Tech Note: Shelf Angles

- Shelf angles should consist of steel angles sized and installed to carry the brickwork above. Structures with a maximum veneer height of 30 ft from foundation to top of wall and 38 ft from foundation to top of gable can have their entire brick veneer supported directly on a foundation wall, footing or noncombustible support without shelf angles.

160

BIA Tech Note: Shelf Angles

- Structures with brick veneer above this height should have a shelf angle at each floor. Shelf angles may be located near the floor line or at the window head. Shelf angles attached to rigid concrete or steel elements should have full height shims to reduce rotation as shown in Fig. 7.

161

BIA Tech Note: Figure 7

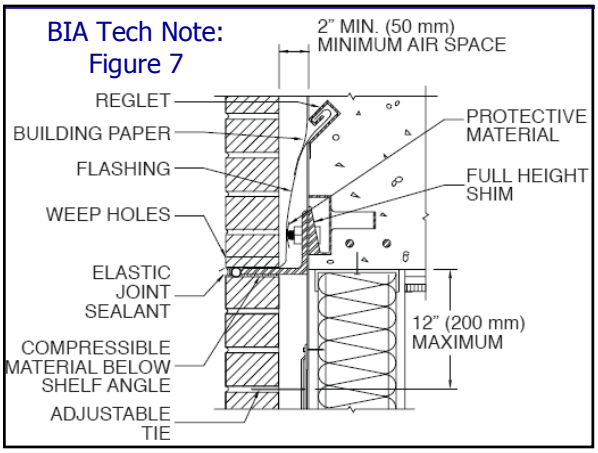

BIA Tech Note: Shelf Angles

- Any shelf angle attached to miscellaneous steel elements must have bracing to prevent out-of-plane movement of the wall as depicted in Fig. 8.

163

BIA Tech Note: Figure 8

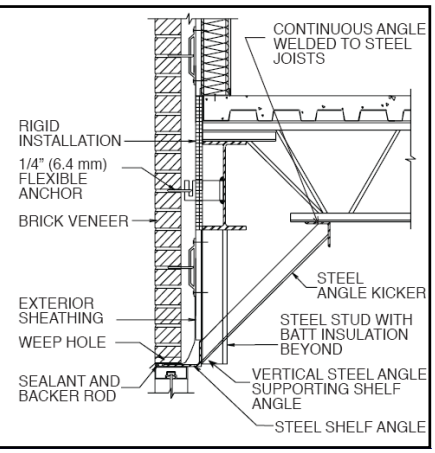

Curtain Walls
supported by
Cold-Formed Steel Framing

- Definition and System Overview
- Load Path and Design Criteria
- Member & System Design using the Wall Stud Standard & Curtain Wall Design Guide (AISI publications)
- Brick Veneer special detailing
- Fire, Energy and Inspection Requirements
- Available Resources

165

Fire

- Fire Separation
- Interior & Exterior Fire Resistance
- Wall/Floor Intersection

166

Exterior Wall Fire Resistance

- Tables 602 specifies the fire resistance rating requirements for exterior walls based on fire separation distance in association with the occupancy group to determine minimum fire resistance rating.

167

Table 602
Exterior Wall Fire Resistance

Fire Separation Distance (Feet)	Type of Construction	Group H	Group F-1, M, S-1	Group A, B, E, F-1, I, R, S-2, U
< 5	All	3	2	1
≥ 5	IA	3	2	1
< 10	Others	2	1	1
≥ 10	IA, IB	2	1	1
< 30	IIB, VB	1	0	0
	Others	1	1	1
≥ 30	All	0	0	0

(notes not shown)

168

Fire Resistance Ratings

- Section 704 exterior walls requires exterior walls to be fire endurance tested from both sides of the assembly when said wall is 5 feet or less of the fire separation distance. Greater than 5 feet need only be rated for exposure to fire from the inside.

169

CT Building Code 2005

713.4 Exterior curtain wall/floor intersection. Where fire-resistance-rated floor or floor/ceiling assemblies are required, voids created at the intersection of the exterior curtain wall assemblies and such floor assemblies shall be sealed with an approved material or system to prevent the interior spread of fire. Such material or systems shall be securely installed and capable of preventing the passage of flame and hot gasses sufficient to ignite cotton waste where subjected to ASTM E119 time-temperature fire conditions under a minimum positive pressure differential of 0.01 inch (0.254 mm) of water column (2.5 Pa) for the time period at least equal to the fire-resistance rating of the floor assembly. Height and fire-resistance requirements for curtain wall spandrels shall comply with Section 704.9.

170

CT Building Code 2005

- **704.9 Vertical separation of openings.** Openings in exterior walls in adjacent stories shall be separated vertically to protect against fire spread on the exterior of the buildings where the openings are within 5 feet (1524 mm) of each other horizontally and the opening in the lower story is not a protected opening in accordance with Section 715.4.8 ["Exterior fire window assemblies"]. Such openings shall be separated vertically at least 3 feet (914 mm) by spandrel girders, exterior walls or other similar assemblies that have a fire-resistance rating of at least 1 hour or by flame barriers that extend horizontally at least 30 inches (763 mm) beyond the exterior wall. Flame barriers shall also have a fire-resistance rating of at least 1 hour. The unexposed surface temperature limitations specified in ASTM E119 shall not apply to the flame barriers or vertical separation unless otherwise required by the provisions of this code.

171

CT Building Code 2005

- Section 704.9 Exceptions
  1 This section shall not apply to buildings that are three stories of less in height.
  2 This section shall not apply to buildings equipped throughout with an automatic sprinkler system in accordance with Section 903.3.1.1 ["NFPA 13"]or 903.3.1.2 ["NFPA 13R"].
  3 Open parking garages [Section 406].

172

IBC-2006 (Code change FS99-04/05)

713.4 Exterior curtain wall/floor intersection. Where fire-resistance-rated floor or floor/ceiling assemblies are required, voids created at the intersection of the exterior curtain wall assemblies and such floor assemblies shall be sealed with an approved material or system to prevent the interior spread of fire. Such material or systems shall be securely installed and capable of preventing the passage of flame and hot gasses sufficient to ignite cotton waste where subjected either to ASTM E119 time-temperature fire conditions under a minimum positive pressure differential of 0.01 inch (0.254 mm) of water column (2.5 Pa), or installed as tested in accordance with ASTM E2307 for the time period at least equal to the fire-resistance rating of the floor assembly. Height and fire-resistance requirements for curtain wall spandrels shall comply with Section 704.9.

173

ASTM E2307

- Standard Test Method for Determining Fire Resistance of Perimeter Fire Barrier Systems Using Intermediate-Scale, Multi-Story Test Apparatus.
- Standard was introduced to address perimeter fire barrier system that other test methods do not specifically address. The test method functions:
  - Specifies criteria and methods to determine fire resistance
  - Uses multi-story test chamber to simulate possible fire exposure
  - Measures performance of the fire barrier

174

Energy

- International Energy Conservation Code
- IBC Chapter 14 "Exterior Walls"

175

Energy Conservation

- Building Design for all Commercial Buildings
- Choice of designing to Chapter 7 (ASRHAE Standard 90.1) or Chapter 8.
- Standard 90.1 "Energy Standard for Buildings Except Low-Rise Residential Buildings"

176

IECC Chapter 7

- ASHRAE Standard 90.1
- Choice of three approaches for the design of the building envelope:
- Prescriptive Path (Section 5.5)
- Building Envelope Trade-Off Option (Section 5.6)
- Energy Cost Budget Method (Sec. 11)

177

IECC Chapter 8

- Design by Acceptable Practice for Commercial Buildings.
- Each section (802, 803, 804 and 805 to be satisfied on an individual basis).
- Section 802 Building Envelope.

178

ASHRAE 90.1

- Under the prescriptive method Connecticut is listed under Table B17.
- Walls above grade, steel framed, for non-residential, the following:
- U-factor maximum 0.084
- R-value minimum R13cavity + R3.8continuous

179

IECC Chapter 8

- Under prescriptive method Connecticut is listed as having three (3) climate zones (Zones 12A, 13A, and 14A).
- Depending on glazing criteria, the following:
- Zone 12A R-value min. R11cavity
- Zone 13A R-value min. R13cavity
- Zone 14A R-value min. R13cavity + R3continuous insulation

180

Energy Performance

- When using any of the performance approaches the curtain wall insulation can be affected by the following:
- Amount and type of glazing area,
- Type, size, and efficiency of HVAC,
- Assumed/calculated internal heat loads,
- Etc.

181

Insulation

- Mineral fiber type cavity insulation is to be "full width" type cavity insulation.
- Other types of cavity insulation (e.g. Foams, loose fills, etc.) are to be installed such that they fill the cavity.

182

IBC Chapter 14

- Establishes minimum requirements for exterior walls
- Weather protection – weather resistant exterior wall envelope.
- Designed and constructed in such a manner as to prevent the accumulation of water within the wall assembly….

183

IBC Chapter 14

- Provisions for water resistive barriers:
- Means for draining water that may enter the wall assembly
- Vapor retarders
- Flashing
- Provisions for exterior wall coverings
- Flood resistance (FEMA publications)

184

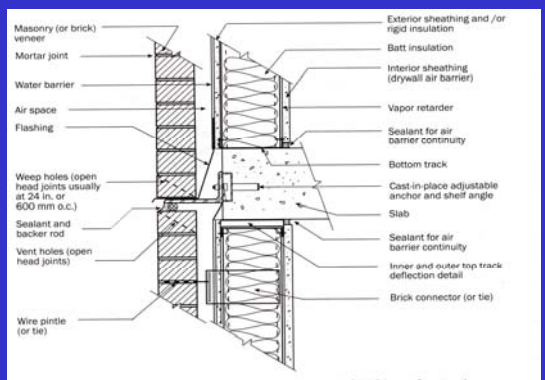

Figure 7 Typical Shelf Angle Detail with Drywall Air Barrier in Cold Climate Construction

Inspections

- Building Code Chapter 17
- AISI Publications

186

Inspections

- Building Code requires general inspection of curtain walls.
- Does not require special inspections of curtain wall construction, but does require special inspection (Section 17) of the structure supporting the curtain wall construction.

187

Inspections

- Cold-Formed Structural Engineers Institute (Formerly LGSEA) has produced an inspection checklist.
- Tech Note 1010b entitled "Inspection Checklist for Structural Cold-Formed Steel Framing Guide"

188

Inspections

- Connection to structure
- Connections throughout
- Stud end bearing (Seating)
- Stud alignment
- Stud Bracing
- Splicing
- Tributary areas (windows, doors, etc.)

189

Curtain Walls
supported by
Cold-Formed Steel Framing

- Definitions and System Overview
- Load Path and Design Criteria
- Member & System Design using the Wall Stud Standard & Curtain Wall Design Guide (AISI publications)
- Brick Veneer special detailing
- Fire, Energy and Inspection Requirements
- Available Resources

190

Technical Assistance

- Jonathan Humble, AIA
- Regional Director
- American Iron and Steel Institute
- West Hartford, CT
- (860) 231-7520
- Jhumble@steel.org

191

- American Iron & Steel Institute
  - www.steel.org
- Steel Framing Alliance
  - www.steelframing.org
- Steel Stud Manufacturers Association
  - www.ssma.com
- Center for Cold-Formed Steel Structures
  - http://campus.umr.edu/ccfss/
- Cold-Formed Structural Engineers Institute (CFSEI)
  - www.cfsei.org

192

Resources: Publications

- Code-Adopted Standards
  - AISI Standards
  - Applicable ASTM International Standards
- Design Guides and Technical Publications

193

Design Guides

- Wall Stud Design Guide (AISI)
- Thermal Design Guide (SFA)
- Fire and Sound Rated Assemblies (SFA)
- Product Technical Information (SSMA)
- Truss Construction Bracing Design Guide 551d (CFSEI)
- Truss Permanent Bracing Design Guide 551e (CFSEI)
- Design Guide for Sheathing Attachment with Pneumatic Pins 561c (CFSEI)

194

Inspection Checklists

- Inspection Checklist for Structural Cold-Formed Steel Framing 1010c (CFSEI) Inspection Checklist for Structural Cold-Formed Steel Framing 1010b- shirt pocket size (CFSEI)

195

ASTM International Standards

- Material Specifications: Sheet Steel
  - A1003 (Specific to framing members)
  - A653, A792, A875: Coated Steels
- Material Specifications: Studs & Track
  - C645 (non-structural) C955 (structural)
- Installation Specifications: Studs & Track
  - C754 (non-structural) C1007 (structural)
- Screw Connections: C1513 (new)
  - Also C954 and C1002

196

Resources and Contacts

American Iron & Steel Institute
www.steel.org 202-452-7100

For ordering AISI and SFA Books, standards, and other resources:
Steel Framing Alliance
www.steelframing.org 202-785-2022

Steel Stud Manufacturers Assn.: Free downloads on web of details, span and load tables, Technical Notes
www.ssma.com 312-456-5590

Steel Recycling Institute
www.recycle-steel.org 800-876-7274

CFSEI Tech notes, Newsletters, and resources for engineers and designers www.cfsei.org

Steel Hotline: Answers by experts for builders, architects, engineers. Based at the NAHB Research center 800-79STEEL (800-797-8335)

Jonathan Humble, AIA
Northeast Regional Director,
American Iron and Steel Institute
jhumble@steel.org

197