Draft

PERMIT

Permit No: 200701764-KB

Town/City: Norwalk

Work Area: Sheffield Island Harbor off property located at 32 Yarmouth Road

Permittee: Robert Manning
32 Yarmouth Road
Norwalk, CT 06853

Pursuant to sections 22a-359 through 22a-363f of the Connecticut General Statutes ("CGS") and in accordance with CGS section 22a-98, and the Connecticut Water Quality Standards dated December 2002, a permit is hereby granted by the Commissioner of Environmental Protection ("Commissioner") to remove an existing dock and install a new dock; and remove stones for private recreational boating use as is more specifically described below in the SCOPE OF AUTHORIZATION, in Sheffield Island Harbor off property identified as the "work area" above.

*****NOTICE TO PERMITTEES AND CONTRACTORS*****

FAILURE TO CONFORM TO THE TERMS AND CONDITIONS OF THIS PERMIT MAY SUBJECT THE PERMITTEE AND ANY CONTRACTOR TO ENFORCEMENT ACTIONS, INCLUDING PENALTIES AND INJUNCTIONS, AS PROVIDED BY LAW.

SCOPE OF AUTHORIZATION

The Permittee is hereby authorized to conduct the following work as described in Application No. 200701764-KB including 3 sheets of plans attached hereto as follows: Sheet 1 of 1, Assessor's Map dated June 4, 2007; Sheet1 of 2, Vicinity Map and Existing/Proposed Plan View revised September 3, 2009; and Sheet 2 of 2, Proposed Pier Elevation, Proposed Pier Section and Proposed Floating dock Section dated June 4, 2007 submitted by the Permittee to the Commissioner as follows:

1. remove an existing 3' x 32' gangway ramp and a 7' x 14' floating dock and retain the previously permitted float anchor pilings to be incorporated into the pier authorized in paragraph 2., below;

2. install an approximately 4' x 30' pile supported timber pier, a 3' x 32' ramp and an 8' x 20' floating dock secured with three pilings; and

3. remove approximately ten, 2' - 4' diameter stones from an approximately 24' x 24' subtidal area as shown on Sheet 1 of 2 of the project plans.

UPON INITIATION OF ANY WORK AUTHORIZED HEREIN, THE PERMITTEE ACCEPTS AND AGREES TO COMPLY WITH ALL TERMS AND CONDITIONS OF THIS PERMIT.

SPECIAL TERMS AND CONDITIONS

1. Prior to the commencement of the work authorized in paragraphs 2. and 3. of the SCOPE OF AUTHORIZATION, above, the Permittee shall remove to a location landward of the high tide line, the ramp and float authorized in paragraph 1. of the SCOPE OF AUTHORIZATION, above.

2. The Permitee shall conduct the work authorized in paragraph 3. of the SCOPE OF AUTHORIZATION, above, by preparing these stones for hoisting during low water; fit the rocks with slings for removal; if necessary, hand dig around the stones and put back the displaced material once the hole is dug and the slings are fitted around the stone; tie buoyed lines to the eyes of the slings to allow for retrieval of the stones during high tide; and use a crane barge to hoise each stone onto the barge. All work authorized shall be conducted in the manner outlined above unless otherwise authorized in writing by the Commissioner.

3. The Permittee shall ensure that all work associated with the driving of piles by a water-based barge be conducted during periods of high water only in order to ensure that the barge does not rest on or come in contact with bottom substrates. Any such barge must move to deeper waters during periods of low water. It shall not be a defense to this provision for the Permittee to assert that they have no control over the operation of the barge.

4. The Permittee shall establish a minimum of a 9 foot setback from any wetlands in and adjacent to the area where work is to be conducted or areas which are to be used for access to the work area. Such setback area(s) shall be flagged so as to be readily identifiable by contractor personnel until the work authorized hereunder is completed.

5. Except as specifically authorized by this permit, no equipment or material, including but not limited to, fill, construction materials, excavated material or debris, shall be deposited, placed or stored in any wetland or watercourse on or off-site, or within any delineated setback area, nor shall any wetland, watercourse or delineated setback area be used as a staging area or accessway other than as provided herein.

6. Not later than two weeks prior to the commencement of any work authorized herein, the Permittee shall submit to the Commissioner, on the form attached hereto as Appendix A, the name(s) and address(es) of any contractor(s) employed to conduct such work and the expected date for commencement and completion of such work.

7. On or before (a) 90 days after completion of the work authorized herein, or (b) upon expiration of the work completion date or any authorized one year extension thereof, whichever is earlier, the Permittee shall submit to the Commissioner "as-built" plans prepared and sealed by a licensed engineer, surveyor or licensed architect, as applicable, of the work are showing all tidal datums and structures.

GENERAL TERMS AND CONDITIONS

1. All work authorized by this permit shall be completed within five years from date of issuance of this

permit ("work completion date") in accordance with all conditions of this permit and any other applicable law.

a. The Permittee may request a one-year extension of the work completion date. Such request shall be in writing and shall be submitted to the Commissioner at least 30 days prior to said work completion date. Such request shall describe the work done to date, work which still needs to be completed and the reason for such extension. The Commissioner shall grant or deny such request in her sole discretion.

b. Any work authorized herein conducted after said work completion date or any authorized one year extension thereof is a violation of this permit and may subject the Permittee to enforcement action, including penalties, as provided by law.

2. In conducting the work authorized herein, the Permittee shall not deviate from the attached plans, as may be modified by this permit. The Permittee shall not make de minimis changes from said plans without prior written approval of the Commissioner.

3. The Permittee shall maintain all structures or other work authorized herein in good condition. Any such maintenance shall be conducted in accordance with applicable law including, but not limited to, CGS sections 22a-28 through 22a-35 and CGS sections 22a-359 through 22a-363f.

4. Prior to the commencement of any work authorized hereunder, the Permittee shall cause a copy of this permit to be given to any contractor(s) employed to conduct such work. At the work area the Permittee shall, whenever work is being performed, make available for inspection a copy of this permit and the final plans for the work authorized herein.

5. The Permittee shall notify the Commissioner in writing of the commencement of any work and completion of all work authorized herein no later than three days prior to the commencement of such work and no later than seven days after the completion of such work.

6. All waste material generated by the performance of the work authorized herein shall be disposed of by the Permittee at an upland site approved for the disposal of such waste material, as applicable.

7. In undertaking the work authorized hereunder, the Permittee shall not cause or allow pollution of wetlands or watercourses, including pollution resulting from sedimentation and erosion. For purposes of this permit, "pollution" means "pollution" as that term is defined by CGS section 22a-423.

8. Upon completion of any work authorized herein, the Permittee shall restore all areas impacted by construction, or used as a staging area or accessway in connection with such work, to their condition prior to the commencement of such work.

9. Any document required to be submitted to the Commissioner under this permit or any contact required to be made with the Commissioner shall, unless otherwise specified in writing by the Commissioner, be directed to:

Permit Section

Office of Long Island Sound Programs
Department of Environmental Protection
79 Elm Street
Hartford, Connecticut 06106-5127
(860) 424-3034
Fax # (860) 424-4054

10. The date of submission to the Commissioner of any document required by this permit shall be the date such document is received by the Commissioner. The date of any notice by the Commissioner under this permit, including but not limited to notice of approval or disapproval of any document or other action, shall be the date such notice is personally delivered or the date three days after it is mailed by the Commissioner, whichever is earlier. Except as otherwise specified in this permit, the word "day" as used in this permit means calendar day. Any document or action which is required by this permit to be submitted or performed by a date which falls on a Saturday, Sunday or a Connecticut or federal holiday shall be submitted or performed on or before the next day which is not a Saturday, Sunday, or a Connecticut or federal holiday.

11. The work specified in the SCOPE OF AUTHORIZATION is authorized solely for the purpose set out in this permit. No change in the purpose or use of the authorized work or facilities as set forth in this permit may occur without the prior written authorization of the Commissioner. The Permittee shall, prior to undertaking or allowing any change in use or purpose from that which is authorized by this permit, request authorization from the Commissioner for such change. Said request shall be in writing and shall describe the proposed change and the reason for the change.

12. This permit may be revoked, suspended, or modified in accordance with applicable law.

13. This permit is not transferable without prior written authorization of the Commissioner. A request to transfer a permit shall be submitted in writing and shall describe the proposed transfer and the reason for such transfer. The Permittee's obligations under this permit shall not be affected by the passage of title to the work area to any other person or municipality until such time as a transfer is authorized by the Commissioner.

14. The Permittee shall allow any representative of the Commissioner to inspect the work authorized herein at reasonable times to ensure that it is being or has been accomplished in accordance with the terms and conditions of this permit.

15. In granting this permit, the Commissioner has relied on representations of the Permittee, including information and data provided in support of the Permittee's application. Neither the Permittee's representations nor the issuance of this permit shall constitute an assurance by the Commissioner as to the structural integrity, the engineering feasibility or the efficacy of such design.

16. In the event that the Permittee becomes aware that he did not or may not comply, or did not or may not comply on time, with any provision of this permit or of any document required hereunder, the Permittee shall immediately notify the Commissioner and shall take all reasonable steps to ensure that any noncompliance or delay is avoided or, if unavoidable, is minimized to the greatest extent possible. In so notifying the Commissioner, the Permittee shall state in writing the reasons for the noncompliance or delay and propose, for the review and written approval of the Commissioner, dates

by which compliance will be achieved, and the Permittee shall comply with any dates which may be approved in writing by the Commissioner. Notification by the Permittee shall not excuse noncompliance or delay and the Commissioner's approval of any compliance dates proposed shall not excuse noncompliance or delay unless specifically stated by the Commissioner in writing.

17. In evaluating the application for this permit the Commissioner has relied on information and data provided by the Permittee and on the Permittee's representations concerning site conditions, design specifications and the proposed work authorized herein, including but not limited to representations concerning the commercial, public or private nature of the work or structures authorized herein, the water-dependency of said work or structures, its availability for access by the general public, and the ownership of regulated structures or filled areas. If such information proves to be false, deceptive, incomplete or inaccurate, this permit may be modified, suspended or revoked, and any unauthorized activities may be subject to enforcement action.

18. The Permittee may not conduct work waterward of the high tide line or in tidal wetlands at this permit site other than the work authorized herein, unless otherwise authorized by the Commissioner pursuant to CGS section 22a-359 et. seq. and/or CGS section 22a-32 et. seq.

19. The issuance of this permit does not relieve the Permittee of his obligations to obtain any other approvals required by applicable federal, state and local law.

20. Any document, including but not limited to any notice, which is required to be submitted to the Commissioner under this permit shall be signed by the Permittee and by the individual or individuals responsible for actually preparing such document, each of whom shall certify in writing as follows: "I have personally examined and am familiar with the information submitted in this document and all attachments and certify that based on reasonable investigation, including my inquiry of those individuals responsible for obtaining the information, the submitted information is true, accurate and complete to the best of my knowledge and belief, and I understand that any false statement made in this document or its attachments may be punishable as a criminal offense."

21. This permit is subject to and does not derogate any present or future property rights or powers of the State of Connecticut, and conveys no property rights in real estate or material nor any exclusive privileges, and is further subject to any and all public and private rights and to any federal, state or local laws or regulations pertinent to the property or activity affected hereby.

Issued on _____, 2009

STATE OF CONNECTICUT
DEPARTMENT OF ENVIRONMENTAL PROTECTION

_____
Betsey Wingfield
Bureau Chief
Bureau of Water Protection and Land Reuse

Permit Application No. 200701764-KB, Norwalk
Robert Manning

Certified Mail #_____

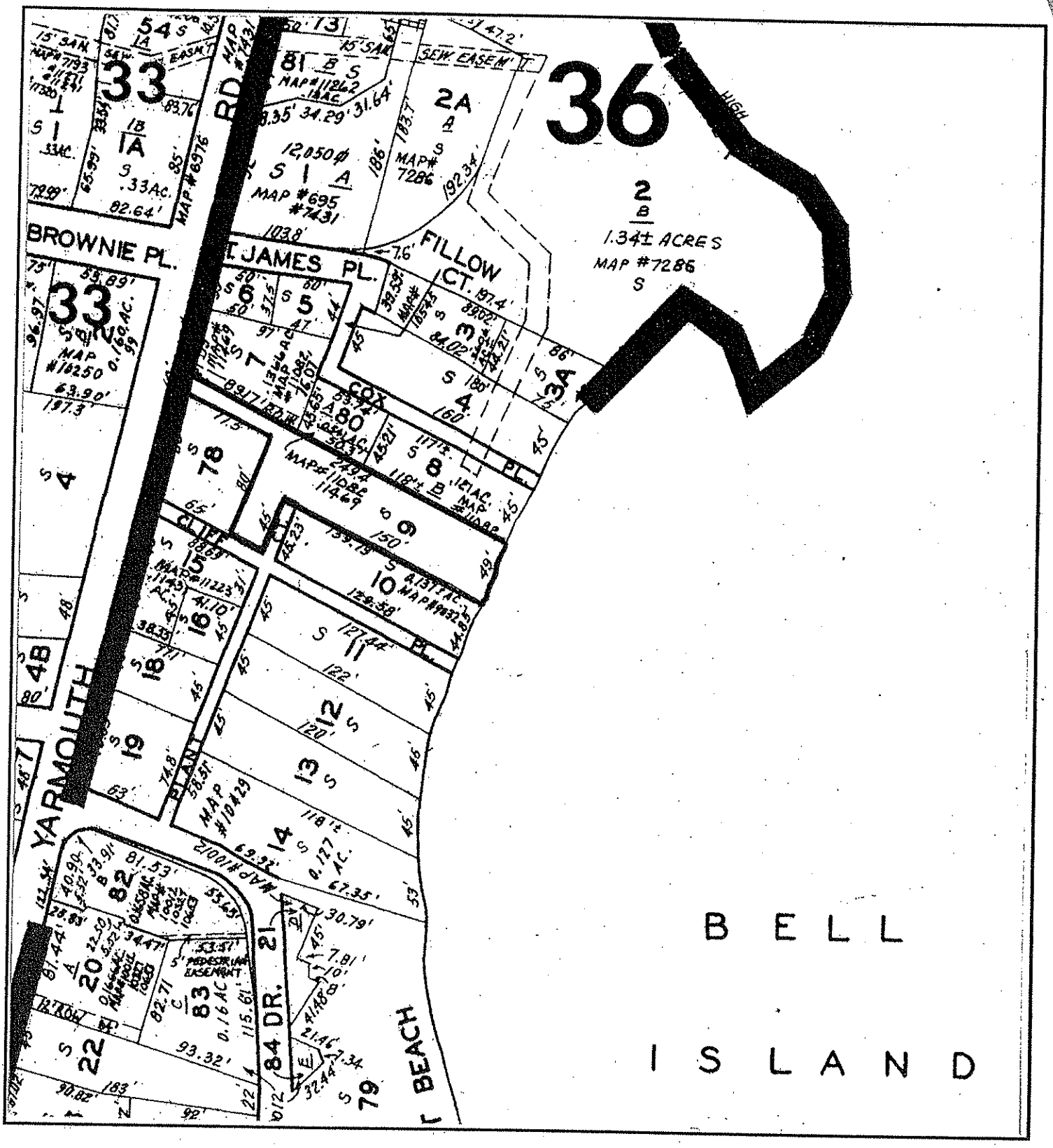

ASSESSOR'S MAP

FROM NORWALK ASSESSOR'S MAP NUMBER 10SE BLOCK 36 LOT 9

'URPOSE: SEASONAL PRIVATE RECREATIONAL SMALL-BOAT DOCKING FACILITY	PROPOSED PILING-SUPPORTED TIMBER PIER, RAMP & TIMBER FLOATING DOCK
LL DATUM: MEAN LOW WATER	IN: SHEFFIELD ISLAND HARBOR /LONG ISLAND SOUND
DJACENT PROPERTY OWNERS:	AT: 32 YARMOUTH ROAD, NORWALK, FAIRFIELD COUNTY, CONNECTICUT
HENRY S. PALAU, MEGRUE-CLIFF PLACE, LLC	APPLICANT: MR. ROBERT MANNING
PPLICATION PREPARED BY: JOHN HILTS P.O. BOX 47, ROWAYTON, CT 06853	DATE: 6/04/07 SHEET 1 OF 1 (ATTACHMENT C) REV. NO.: DATE:

EXISTING AND PROPOSED PLAN VIEW

SCALE: 1" = 20'

20' 0' 20'

N

FRAME DWELLING

PROPERTY OF HENRY S. PALAU 38 YARMOUTH ROAD

PROPERTY LINE

PROPERTY OF ROBERT MANNING 32 YARMOUTH ROAD

PROPERTY LINE

"COASTAL 'FLOOD' HAZARD AREA" AND "ROCKY SHOREFRONT"

ROCK LEDGE

EXISTING MASONRY SEAWALL AND CONCRETE DECK

SPARTINA ALTERNIFLORA ("TIDAL WETLANDS")

ROCK LEDGE

STONE JETTY

PROPOSED 4' BY 30' PILING-SUPPORTED TIMBER PIER

76'

ROCK LEDGE

EXISTING 3' BY 32' ALUMINUM RAMP TO BE RELOCATED TO PROPOSED PIER

"NEARSHORE WATERS"

ROCKS ON GRAVEL

EL. -1' M.L.W.

PROPOSED 8' BY 20' TIMBER FLOATING DOCK

SAND

24'

MEAN LOW WATER LINE (EL. 0.0')

EL. -2' M.L.W.

EL. -1' M.L.W.

HISTORICAL FILL (ROCKS ON SAND) TO BE REMOVED AND DISPOSED OF OFFSITE AT UPLAND LOCATION

24'

128'± TO MOORING

104'± TO MOORING

±125" TO SHELLFISH BED 218

161'± TO MOORING

"SHELLFISH CONCENTRATION AREA"

SAND AND MUD

SHEFFIELD ISLAND HARBOR

EBB

FLOOD

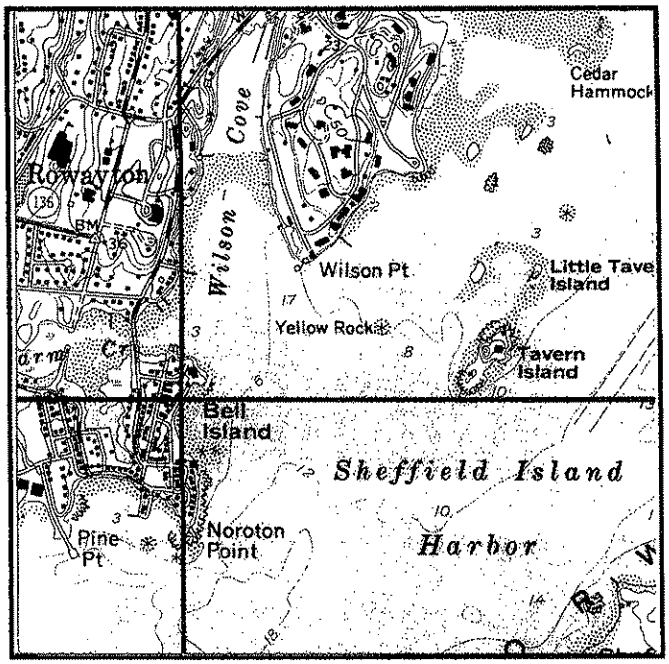

VICINITY MAP

FROM U.S.G.S NORWALK SOUTH QUADRANGLE MAP - SCALE: 1:24000

NOTES:

1. *PREPARED FROM A SURVEY DATED 9/26/05 BY WM. W. SEYMOUR & ASSOC. AND SITE VISITS ON 5/17/07 AND 9/6/08.*
2. *REFER TO CT APPROVAL OF REGISTRATION 200502013-KB FOR AUTHORIZED STRUCTURES (SHOWN IN DOTTED LINES).*
3. *HIGHEST PREDICTABLE TIDE LINE (EL. + 8.5') AND MEAN HIGH WATER LINE (EL. +7.1') ARE COINCIDENT WITH SEAWALL.*
4. *ELEVATION CONTOURS ARE PER SEYMOUR SURVEY.*
5. *DISTANCE TO BED 218 SCALED FROM CITY SHELLFISH MAP.*

PURPOSE: SEASONAL PRIVATE RECREATIONAL SMALL-BOAT DOCKING FACILITY	*PROPOSED PILING-SUPPORTED TIMBER PIER, RAMP & TIMBER FLOATING DOCK*
ALL DATUM: MEAN LOW WATER	*IN: SHEFFIELD ISLAND HARBOR /LONG ISLAND SOUND*
ADJACENT PROPERTY OWNERS:	*AT: 32 YARMOUTH ROAD, NORWALK, FAIRFIELD COUNTY, CONNECTICUT*
HENRY S. PALAU, MEGRUE-CLIFF PLACE, LLC	*APPLICANT: MR. ROBERT MANNING*
APPLICATION PREPARED BY: JOHN HILTS P.O. BOX 47, ROWAYTON, CT 06853	*DATE: 6/04/07 SHEET 1 OF 2 REVISION NUMBER: 2 DATE: 9/03/09*

PROPOSED PIER ELEVATION

SCALE: 1" = 20'

20' 0' 20'

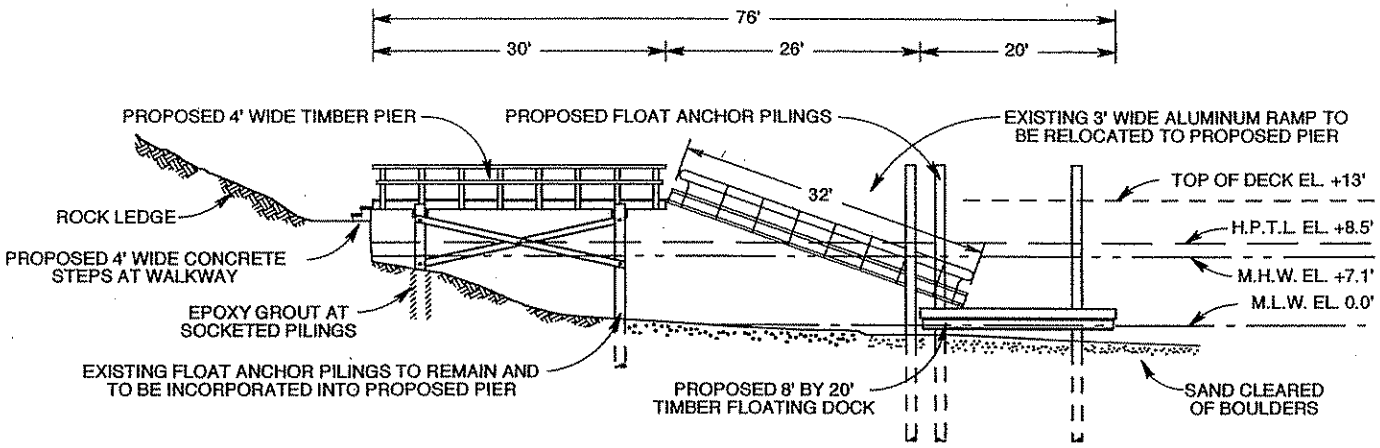

NOTES:

1. ALL PROPOSED TIMBER PILINGS WILL BE SOUTHERN YELLOW PINE CHEMICAL PRESSURE CCA TREATED (2.5 LBS. MINIMUM RETENTION) AND WILL BE DRIVEN TO A MINIMUM TIP ELEVATION OF 8' BELOW EXISTING BOTTOM GRADE OR SOCKETED TO A MINIMUM DEPTH OF 5' EMBEDMENT IN ROCK LEDGE AND SECURED WITH NON-SHRINK EPOXY GROUT

2. ALL STRUCTURAL TIMBERS WILL BE CHEMICAL PRESSURE TREATED SOUTHERN YELLOW PINE OR SUITABLE EQUIVALENT.

3. ALL HARDWARE AND FASTENERS WILL BE HOT-DIPPED GALVANIZED OR STAINLESS STEEL OR SUITABLE EQUIVALENT.

4. RAMP AND FLOATING DOCK WILL BE REMOVED AND STORED AT AN UPLAND LOCATION AWAY FROM TIDAL WETLANDS DURING WINTER.

5. FLOTATION BILLETS WILL CONSIST OF A HIGH-DENSITY POLYETHYLENE CASING WITH A BLACK ULTRAVIOLET LIGHT INHIBITOR ADDED, AND WILL BE FILLED WITH EXPANDED POLYSTYRENE.

PROPOSED PIER SECTION

SCALE: 1" = 5'

5' 0' 5'

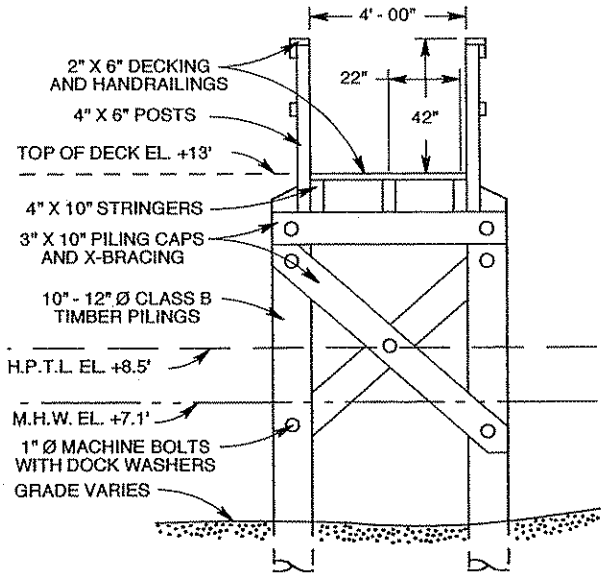

PROPOSED FLOATING DOCK SECTION

SCALE: 1" = 5'

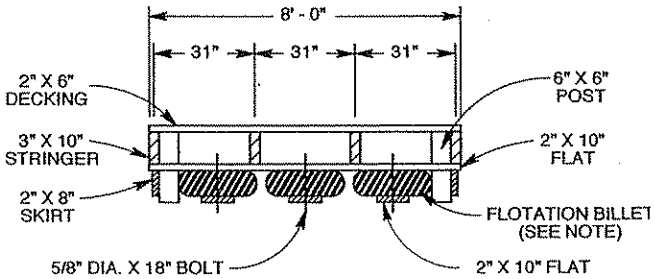

PURPOSE: SEASONAL PRIVATE RECREATIONAL SMALL-BOAT DOCKING FACILITY	*PROPOSED PILING-SUPPORTED TIMBER PIER, RAMP & TIMBER FLOATING DOC*
ALL DATUM: MEAN LOW WATER	*IN: SHEFFIELD ISLAND HARBOR/LONG ISLAND SOUN.*
ADJACENT PROPERTY OWNERS:	*AT: 32 YARMOUTH ROAD, NORWALK, FAIRFIELD COUNTY, CONNECTICUT*
HENRY S. PALAU, MEGRUE-CLIFF PLACE, LLC	*APPLICANT: MR. ROBERT MANNING*
APPLICATION PREPARED BY: JOHN HILTS P.O. BOX 47, ROWAYTON, CT 06853	*DATE: 6/04/07 SHEET 2 OF 2 REVISION NUMBER: DATE:*

OFFICE OF LONG ISLAND SOUND PROGRAMS

APPENDIX A

TO: **Permit Section**
Department of Environmental Protection
Office of Long Island Sound Programs
79 Elm Street
Hartford, CT 06106-5127

PERMITTEE: Alec Gerster
82 Halsted Place
Rye, NY 10580

need to revise

Permit No: 200601764-KB,Norwalk

CONTRACTOR 1: _____

Address: _____

_____

Telephone #: _____

CONTRACTOR 2: _____

Address: _____

_____

Telephone #: _____

CONTRACTOR 3: _____

Address: _____

_____

Telephone #: _____

EXPECTED DATE OF COMMENCEMENT OF WORK: _____

EXPECTED DATE OF COMPLETION OF WORK: _____

PERMITTEE: _____
(signature) (date)