F.H.W.A. REGION NO.	STATE	TOWN	FED. AID PROJ. NO.	PROJ. NO.	YEAR	ROUTE NO.	SHEET NO.	TOTAL SHEETS
1	CONNECTICUT							

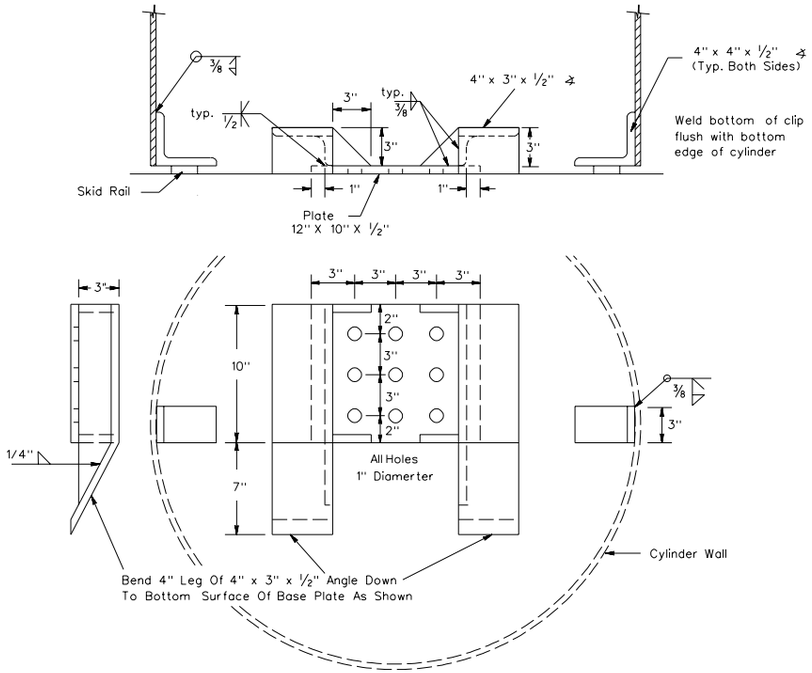

CYLINDER 5 RETAINER PLATE

(Galvanized)

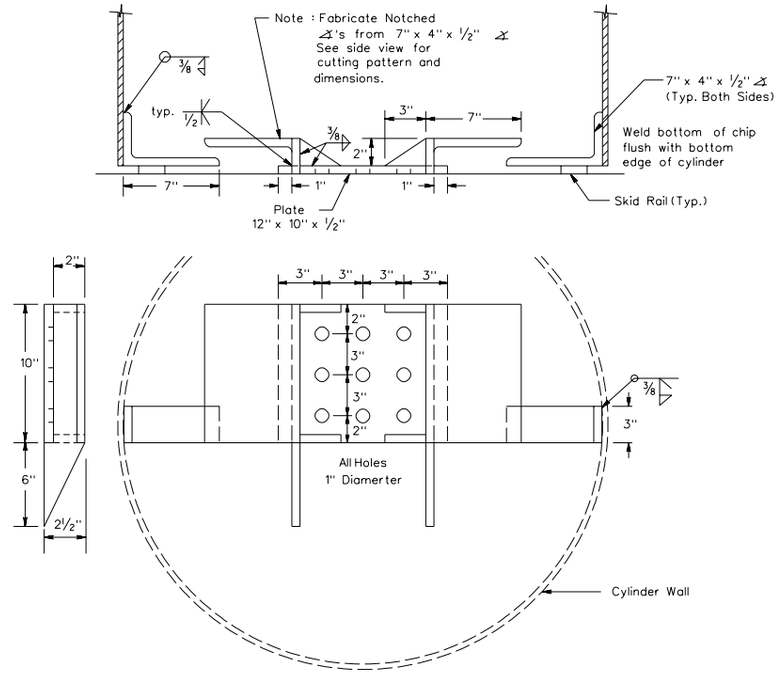

CYLINDER 6 RETAINER PLATE

(Galvanized)

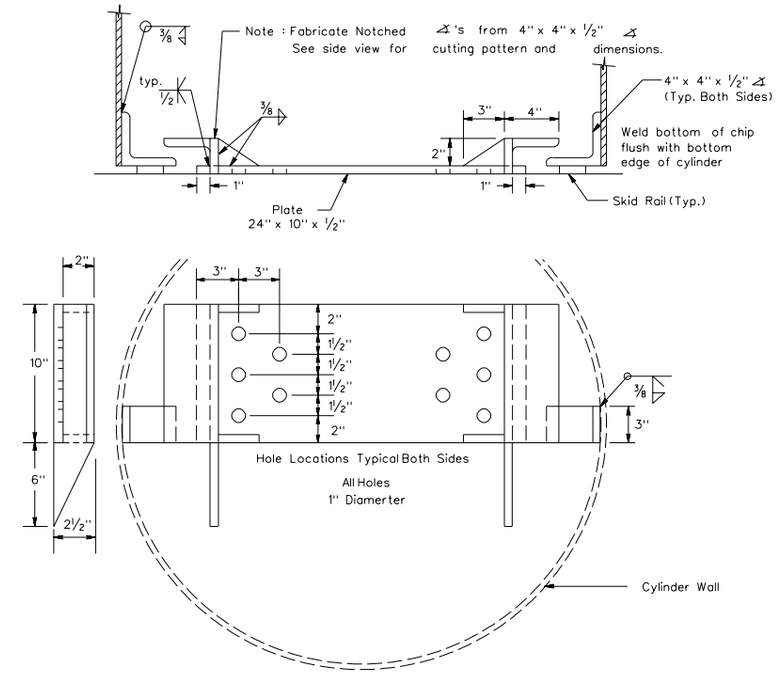

CYLINDER 7 RETAINER PLATE

(Galvanized)

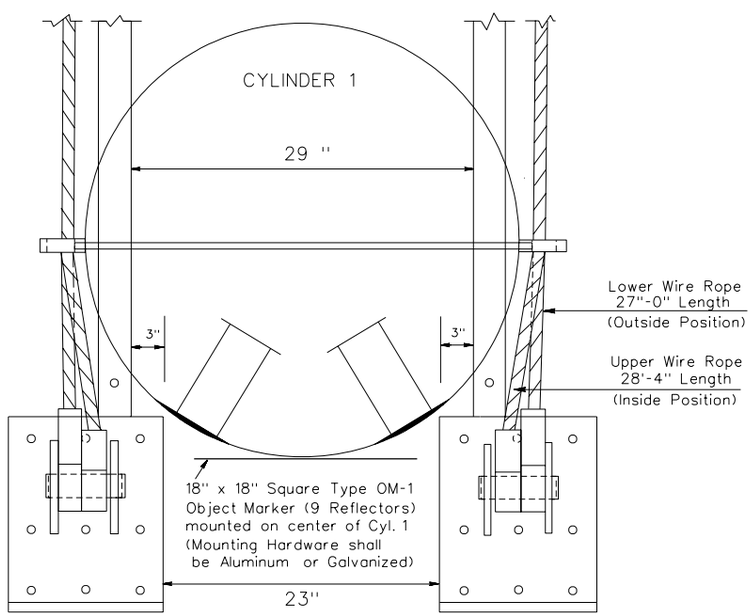

FRONT DETAIL

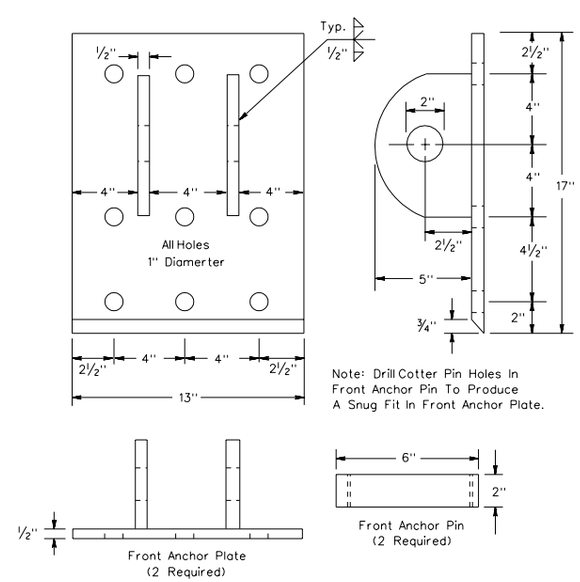

FRONT ANCHOR PLATE ASSEMBLY

(2 Required, Galvanized)

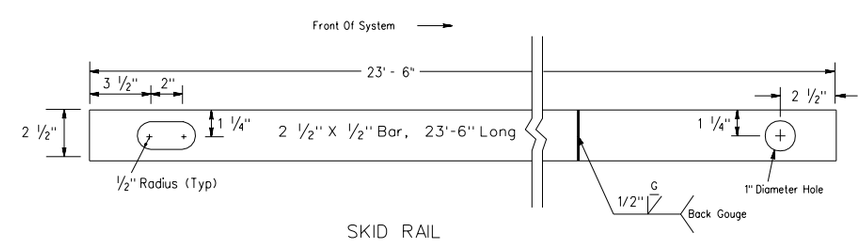

SKID RAIL

(2 Required, Galvanized)

STANDARD SHEET

CONNECTICUT DEPARTMENT OF TRANSPORTATION

NARROW CONNECTICUT IMPACT-ATTENUATION SYSTEM BASE COMPONENT DETAILS

REVISIONS

NO.	DATE	DESCRIPTION
1	3/91	Various Welds.
2	1/99	Galvanized Coating.

Designed by:	John F. Carney III	Date: 3/86
Drafted by:	Joe Cancelliere	Date: 1/90
Checked by:	Eric C. Lohrey	Date: 2/90
Approval Rec:		Date:
Approved:		Date:
F.H.W.A. Approval:		Date:

Scale: NOT TO SCALE

STANDARD NUMBER

1804-B3