BRIDGE SAFETY INSPECTION
STATE PROJECT NO. 170-2010

ROUTINE INSPECTION REPORT FOR BRIDGE NO. 00600R

CARRYING
BOSTON & MAINE RAILROAD
OVER
WEST MAIN STREET
WATERBURY, CONNECTICUT
AT TRACK MILE 24.16

STEEL THROUGH-GIRDER BRIDGE ORTHOTROPIC DECK

INSPECTED MARCH 28, 2013

Prepared By:

benesch
engineers · scientists · planners
formerly PURCELL

90 National Drive
Glastonbury, CT 06033

STATE OF CONNECTICUT
STEVEN J. DRECHSLER
No. 23441
LICENSED
PROFESSIONAL ENGINEER

STATE OF CONNECTICUT
DEPARTMENT OF TRANSPORTATION
BUREAU OF HIGHWAYS

INSPECTION REPORT TRANSMITTAL FORM
Form BRI-27, Rev. 9/97

Structure No. 600R Town WATERBURY

Inspectors PORCELL/BENESCH: S. LACHCIK, D. HINES Date 3/28/13

TABLE OF CONTENTS

Loose Forms (not bound in report)	No. of Sheets Enclosed
Maintenance Memo	3
Flagging Memos	–
BRI-11, Seismic Screening Data Sheet	–
BRI-12, Fracture Critical Inspection Data Sheet	–
BRI-19, HWY Bridge SI&A Form	–
BRI-25, Under Entry SI&A Form	1
BRI-39, RR Bridge SI&A Form	1
BRI-49, Sign Structure SI&A Form	–
PONTIS Element Data Collection Form	–
Plan Sheets . . . . . Check here if already on file: ☐	–
	–

Bound Report Pages	
Title Cover Sheet	1
Table of Contents	1
Executive Summary	3
BRI-18, Bridge Inspection Form	4
BRI-48, Sign Structure Inspection Form	–
Field Notes (Include Forms BRI-10, BRI-13, BRI-14, BRI-15, BRI-16, BRI-17, BRI-29, BRI-30)	31
Calculations :	
Load Rating Evaluation	–
Quantities & Cost Estimate	–
Photo Sheets	17
Negatives (JPEG files to be submitted on CD)	–
LOCATION PLAN	1

P:\1702\MANUAL\REPORT.SUB

BRIDGE #: 00600R TOWN: WATERBURY
OPERATOR: BOSTON & MAINE
LINE NAME: TORRINGTON SECONDARY
FEATURE INTERSECTED: WEST MAIN STREET
PREVIOUSLY INSPECTED ON: 6/3/2010

STATE OF CONNECTICUT
DEPARTMENT OF TRANSPORTATION
BRIDGE SAFETY & EVALUATION
RAILROAD STRUCTURE INVENTORY
SHEET 1 OF 1 FORM BRI-39 10/99

RED FLAG

TEAM: 92 INSPECTED BY: Ramona Lahr David M. Hoe INSPECTION DATE: 3/28/2013
PROJECT NUMBER: 170-2010 91) FREQUENCY: 24 FLAG MAN: 04 ACCESS: 20 IN-DEPTH INSPECTION: 6/3/2010

CRITICAL FEATURES INSPECTIONS	A) FRACTURE CRITICAL B) UNDERWATER C) SPECIAL	TYPE: D TYPE:	92A) FRAC. CRITICAL FREQ: 24 92B) UNDERWATER FREQ: 93C) OTHER FREQ:	93A) INSPECTION DATE: 3/28/2013 93B) UNDERWATER: 93C) OTHER:

IDENTIFICATION

300) OWNER:	CONNDOT
303) MILEPOST:	24.16
9) LOCATION:	JCT OF W MAIN & SPERRY
304) OTHER TRACKAGE RIGHTS:	
A) 00 B) 00 C) 00 D) 00	
16) LATITUDE:	41° 33.5'
17) LONGITUDE:	73° 30.0'
305) CO-OWNER BRIDGE:	00
ADJACENT OWNER BRIDGE:	

GEOMETRIC DATA

48) LENGTH OF MAX. SPAN:		68 FT
49) STRUCTURE LENGTH:		106 FT
52) DECK WIDTH, OUT TO OUT:		46.5 FT
306) CATWALK WIDTHS:	LEFT	0 FT
	RIGHT	0 FT
DECK AREA:		4929 SQ FT
34) SKEW ANGLE:		49 DEG
53) MIN VERT CLEAR OVER:		99' 99"
54) MIN VERT UNDER CLR:	H	13' 1"
55) MIN LAT UNDER CLR R:	H	0'
56) MIN LAT UNDER CLR L:		0'

RESTRICTIONS + UTILITIES

318) PASSENGER TRACK SPEED:	MPH
319) FREIGHT TRACK SPEED:	10 MPH

UTILITIES CARRIED BY THE BRIDGE: 0 0 0 0 0

APPRAISALS

67) STRUCTURE EVALUATION:	3	SJD
69) UNDER CLR VERT AND HORIZ:	2	SL
71) WATERWAY ADEQUACY:	N	SL

AGE AND SERVICE

27) YEAR BUILT:		1906
106) YEAR RECONSTRUCTED:		
42) TYPE OF SERVICE:	A) ON	2
	B) UNDER	1
307) ELECTRIFICATION:		N
308) # OF TRACKS STRUC. DESIGNED FOR:		3
309) # OF TRACKS PRESENTLY ON STRUC:		1
310) NUMBER OF TRACKS IN SERVICE:		1
311) NUMBER OF TRAINS:		
A) PASSENGER TRAINS/DAY		
B) FREIGHT TRAINS/MONTH		31
312) YEAR OF CENSUS:		08
313) AVERAGE PASSENGERS/DAY:		
314) FREIGHT CARLOADS/YEAR:		

WATERWAY

W9) DRAINAGE BASIN WATERWAY CODE:	N
38) NAVIGATION CONTROL:	N
39) NAVIGATION VERT CONTROL:	000
40) NAVIGATION HORIZ CLEARANCE:	0000
116) VERT-LIFT BRG NAV MIN:	
111) PIER NAV PROTECTION:	
113) SCOUR CRITICAL BRIDGE:	N

CONDITION

		Rating	By
58) DECK:	3	3	SL
59) SUPERSTRUCTURE:	4	4	SL
60) SUBSTRUCTURE:	3	3	SL
61) CHANNEL/ PROTECTION:	N	N	SL
62) CULVERTS:	N	N	SL

STRUCTURE TYPE AND MATERIAL

43) STRUCTURE TYPE, MAIN:		
A) MATERIAL	3	STEEL
B) DESIGN TYPE	8	ORTHOTROPIC
315) DECK TYPE:	5	OTHER
316) DEPTH OF BALLAST:		0.0
44) STRUCTURE TYPE, APPROACH:		
A) MATERIAL	3	STEEL
B) DESIGN TYPE	2	R-CONCRETE CONT
45) NUMBER OF SPANS, MAIN UNIT:		1
46) NUMBER OF APPROACH SPANS:		2
317) SUBSTRUCTURE TYPE:		
A) MATERIAL	2	CONCRETE
B) FOUNDATION TYPE	1	FULL HEIGHT STEM

CLASSIFICATION + R-O-W INFORMATION

101) PARALLEL STRUCTURE:	N
103)TEMPORARY STRUCTURE:	
21) MAINTAINER:	01

322)R-O-W FILE LOCATION OF MAPS AND PLANS:

LOAD RATING

31) DESIGN LOAD:	8
41) STRUCTURE OPERATIONAL STATUS:	B

323)COOPER E RATING BY TRACK NUMBER:

	MAXIMUM	NORMAL		MAXIMUM	NORMAL
1)	E 92	E 62	5)		
2)			6)		
3)			7)		
4)			8)		

COMMENTS: ITEM 48: IS TAKEN FROM CTC OF COLUMNS; ITEM 54: NEGLECTING CORBELS ON COLUMNS, AS TRAFFIC IS NOT RIGHT AT CURB FACE; ITEM 60 REDUCED TO A 3 ACCOMPANYING THE BRI-18; ITEMS 311-314 CODED USING CONNDOT PROVIDED INFORMATION; ITEM 323 ACCORDING TO THE 2010 LOAD RATING.

REVIEWED BY Steve Dunn DATE 4/26/13

Saturday, April 13, 2013 1:54:03 P

BRIDGE NUMBER	TOWN NAME	NBIS BRG LGTH
00600R	WATERBURY	106 FT

FACILITY CARRIED	FEATURE CROSSED
BOSTON & MAINE	WEST MAIN STREET

INSPECTED BY: Francois Sales David M. Thor

REVIEWED BY: Stan Drew DATE: 4/26/13

STATE OF CONNECTICUT
DEPARTMENT OF TRANSPORTATION
DIVISION OF BRIDGE SAFETY EVALUATION

INVENTORY ROUTE UNDER STRUCTURE

FORM BRI-25 REV 10/99

SHEET_____ OF_____ (INSP. REPORT)

IDENTIFICATION

5) INVENTORY ROUTE:		
A) RECORD TYPE	2	
B) ROUTE SIGNING PREFIX	3	
C) DESIGNATED LEVEL OF SERVICE	1	
D) ROUTE NO.	00847	
11) MILE POINT (INV.RTE):	24.16	

AGE & SERVICE

+ 28B) NUMBER OF INV.ROUTE LANES:	3	
* 29) ADT (INV. RTE):	23000	
** 109) TRUCK ADT % (INV.RTE):	5	
* 30) YEAR OF ADT (INV. RTE):	11	
* 41) INV ROUTE OPERATIONAL STATUS:	A	A
19) BYPASS DETOUR LENGTH:	3	

GEOMETRIC DATA

+ 10) INV. RTE. MIN. VERT. CLR:	13.1	
+ 47) INV. RTE. TOTAL HORIZ CLR:	42.33	
+ 53) MIN VERT CLR OVER BRIDGE RDWAY	13 ' 1 "	
+ 55) MIN LAT UNDERCLR ON RIGHT:	H 0 '	
+ 56) MIN LAT UNDERCLR ON LEFT:	0 '	

CLASSIFICATION

26) INV. RTE. FUNCT CLASSIFICATION:	16	
100) DEFENSE HIGHWAY DESIGNATION:	0	
** 102) DIRECTION OF TRAFFIC:	2	
104) HIGHWAY SYSTEM OF INV. ROUTE:		
110) DESIGNATED NATIONAL NETWORK:	0	

POSTED SIGNS

+ POSTED VERT. CLR UNDER BRIDGE:	12 ' 10 "	

ADDITIONAL COMMENTS:

MIN CLEARANCE ASSUMES TRUCKS ARE 1' OFF OF CURBS, AS CORBLES PROJECT OUT THIS FAR. THERE ARE NO MARKINGS AND THUS, ASSUMING 1' SHOULDERS, THE ACTUAL TRAVEL WIDTH IS 40.33'.

* FILL OUT ON EVERY INSPECTION 28, 109, 30, 41

\+ VERIFY EVERY INSPECTION 28B, 10, 47, 53, 55, 56 & POSTED VERT CLEARANCE UNDER THE BRIDGE

** MUST BE FILLED OUT OR VERIFIED ON THE FIRST INSPECTION MADE BASED ON THE NEW FHWA GUIDE 109, 102

LOCATION MAP

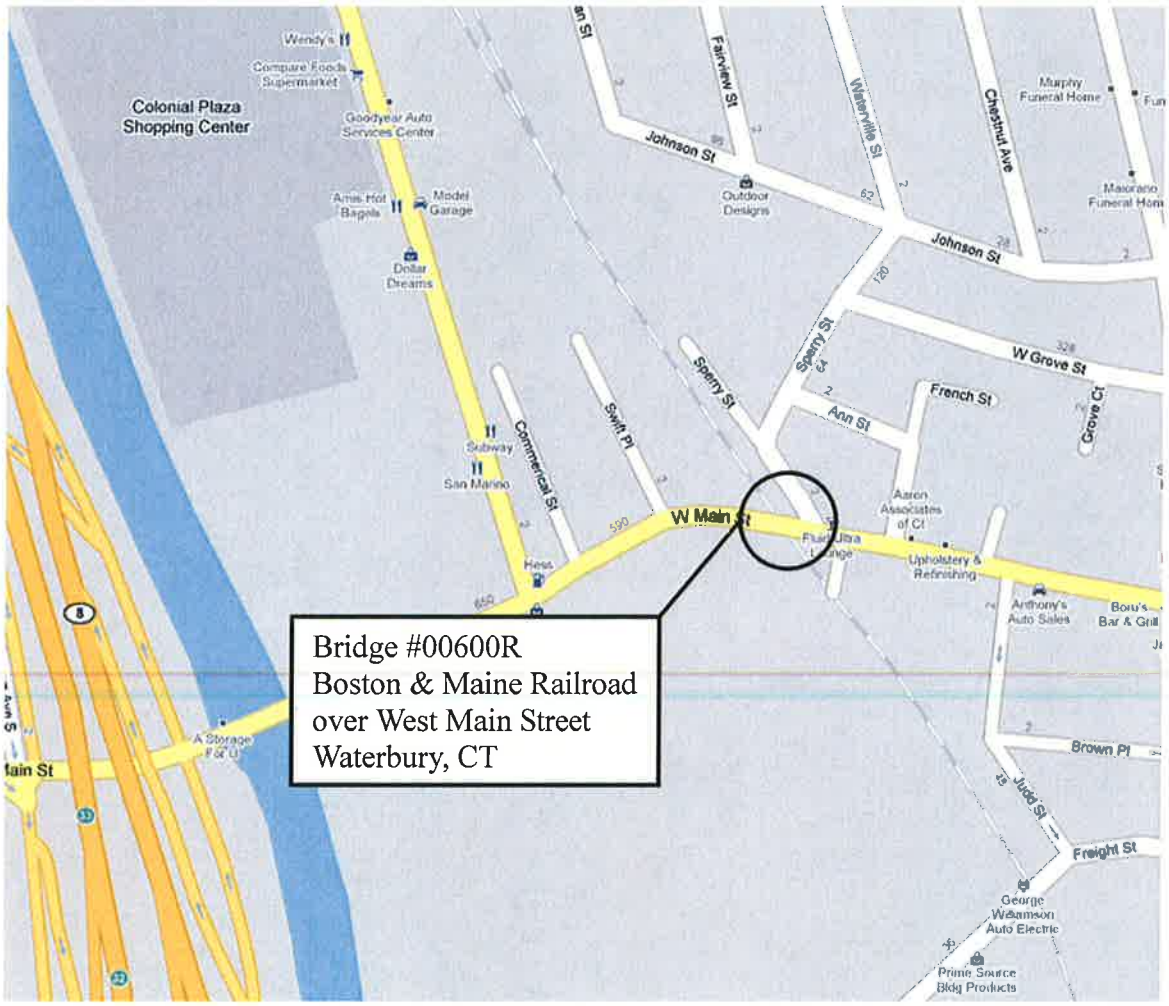

EXECUTIVE SUMMARY
3/28/2013

Bridge No. 00600R at Track Mile 24.16, carries Boston and Maine Railroad over West Main Street in Waterbury, Connecticut. The bridge was built in 1906. The three-span structure consists of four built-up steel through-girders supporting an orthotropic steel deck system partially filled with concrete. The length of the structure is 106 feet. The bridge carries one active railroad track and there are two abandoned and removed tracks. There is a maintenance memo associated with this report.

A load rating was performed for this bridge in 2010 and the normal Cooper "E" rating was computed to be E62. The critical component was found to steel deck in span 2.

OVERVIEW:

The deck is in serious condition. The orthotropic deck is made from riveted built-up steel plates and angles in a corrugated configuration; the corrugations are in the transverse direction (perpendicular to the span). There is up to ¼" pitting section losses with knife edges remaining and rusted-through holes at random locations of the trough web plates. There are holes up to 31" long x 5" high (at deck trough 31 north, east of G2) in many of the trough web plates, under the active track between G2 and G3, span 2. Trough 55 north exhibits various holes, 33" x 4", 6" x 4" and 12" x 5". The trough top flange horizontal plate has up to ¼" deep section loss and rusted-out rivet heads near and underneath the timber ties. The protective coating of the deck has failed up to 90% throughout. There is vegetation growth and debris accumulation in the deck troughs throughout. The bridge timbers/wooden blocking between the deck top plates and the tie plates show extensive checking, splitting, rotting, crushing and dislodgement. The sloped concrete curbing cast against the inside base of the through-girder webs has numerous hollow areas and spalls, typically 2' x 1' x 2" deep, and scaling, up to 3" deep, throughout. The deck drains appear to be clogged. The drain system and gutters servicing the deck are missing and/or abandoned and no longer functional.

The superstructure is in poor condition. The through-girder bearings on top of the columns exhibit up to 1" laminated rust with up to 3/16" section loss at the bearing plates at random locations. The bearings over the abutments were mostly obscured from view. The exposed areas had significant laminated rust with up to 1/8" section loss and heavy debris accumulation. Several anchor bolts between the girders and columns have up to 50% section loss due to rust, particularly G4 over column G4-N (ie the column in the north line of columns, corresponding to girder G4). The girder ends exhibit severe section loss with up to 8" long x 2" wide rusted-out edges and up to knife edge remaining x 3" wide x up to 5' long on the bottom flange plates at random locations. There is up to full length x 2" high x 1/8" section loss to the girder webs where the concrete curbs meet them, above the deck. The girder web stiffeners have perforations up to full width x 4" high at random locations. The girder bottom flange angles have heavy laminated rust and

debris accumulation with up to 1/8" section loss on the horizontal legs and 2" high x 1/16" section loss on the vertical legs. There is an isolated full width x 4" x ¼" area of section loss with a 1" x ½" perforation at the underside of girder G2 bottom flange, near column G2-S in span 2. There is up to 1" pack rust at the girder bottom cover plates at random locations throughout. Rivet heads on the girder bottom flanges have up to 90% section loss at random locations. Groups of up to 10 rivet heads are flattened or sheared off due to impact damage in several locations. All girder bottom cover plates exhibit scrapes and gouges from impact damage at random locations of span 2. There is extensive impact damage to girder G4 bottom flange cover plates over the westbound and eastbound lanes with gouges, up to 10" long x 2" wide at deck trough 29 at girder G4. There is a 12" long x 6" wide tear at the bottom flange cover plate, west side, of girder G4 at deck trough 24 over the travel lanes. It should be noted that as this girder no longer carries live load. The protective coating of the structural steel has failed up to 90% throughout.

The substructure is in serious condition. The concrete abutment stems display random vertical cracks up to full height x 1/4" wide. There is moderate to severe scaling up to 10' x 2' x 3" deep at the west end of the south abutment, hollow areas and spalls up to 7' x 3' high x 5" deep at the east end of the north abutment seat. The abutments have rust stains and areas of hairline map cracking with efflorescence, up to 30' wide x full height at the east part of the south abutment. The concrete backwalls were observed, where exposed, as having random longitudinal and transverse cracks up to 1/8" wide, with hollow and spalled areas up to 7' x 2' x 4" deep. The concrete wingwalls exhibit random cracks, up to 14' long x ½" wide along the southeast wingwall cap. There are several spall/scale areas within the wingwalls, up to 12' long x 4.5' high x 2.5" deep at the bottom of the southwest wingwall. There is hairline map cracking with efflorescence on the wingwalls, up to 70% of the total area of the northwest wingwall. The built-up steel columns and corbels have heavy laminated rust on top of the bearing plates. There are significant section losses to the column bases throughout, with losses to the cover plates up to ¼" x full width x10" high at column G4-N and 2" diameter holes in the cover plate edges. There is up to 50% section loss to the angle legs, and typically up to ¼" x 8" wide section loss to the web plates. Column G4-N has a hole in its web plate up to 6" wide x 3" high, with up to 100% section loss to the rest of the exposed web plate in a band of 1" around the hole. The protective coating of the columns has failed up to 60% throughout. There are several dents from impacts to the columns flanges, up to 23" high x 7" wide x 3" deep at column G2-N at mid-height. There is heavy pigeon waste, debris accumulation and vegetation growth on top of the abutments and wingwalls.

There are advanced warning clearance signs approximately 200'-300' before the bridge on both approaches and another set of signs about 20' before the fascias of the bridge. The signs at the east fascia indicate a clearance of 12'-10", whereas the signs at the west fascia indicate a clearance of 12'-4" for the right eastbound lane and 12'-10" for the left eastbound lane.

The routine inspection concluded on 3/28/2013 and found the overall condition of the bridge to be serious (Condition Rating = 3). The recommendations for this bridge are as follows:

REPAIR ITEMS:

1. Install repair plates at the deteriorated column bases to recover load carrying capacity, particularly to column G2-N (8 EA).

2. Repair the orthotropic deck section losses and holes where necessary (1 LS).

3. Remove accumulated debris from the orthotropic deck and girders in order to minimize superstructure deterioration (7,500 SF).

4. Remove pack rust and repair damage to girder bottom flanges where necessary.

5. Remove all deteriorated concrete and patch/repair cracks and deteriorated areas at the substructure as required. Remove any loose concrete that could potentially fall onto pedestrians walking in the sidewalk. (15 CY).

6. Clean and remove debris from the abutment seats as required in order to provide better accessibility and to help mitigate further deterioration (1 LS).

REHABILITATION ITEMS:

In order to maintain the future serviceability of the bridge, the following items should be considered:

1. Install traffic barriers/attenuators to protect the column bases from direct impact. Re-paint striping and establish proper traffic lanes and shoulders to prevent column corbels from being hit by trucks.

2. Install a new drainage system for the structure in order to redirect water and protect the superstructure from rusting (1 LS).

3. Clean and paint the entire superstructure.

4. Consider removal of the abandoned and unused portions of the superstructure (girders G1 and G4 and adjacent deteriorated metal deck troughs) of the existing bridge

5. Consider replacement with a new structure.

Connecticut Department of Transportation
Bridge Inspection Report BRI-18

BRIDGE #: 00600R **INSPECTION DATE:** 3/28/2013 **Snooper Required:** N
Inspection Type: ROUTINE **PREVIOUS INSPECTION DATE:** 6/3/2010 **Snooper Used:** N

TOWN: WATERBURY **YEAR BUILT:** 1906 **YEAR REBUILT:** STEEL ORTHOTROPIC
LINE: TORRINGTON SECONDARY **FEATURE INTERSECTED:** WEST MAIN STREET
OPERATOR: BOSTON & MAINE **LOCATION:** JCT OF W MAIN & SPERRY

INSPECTION TEAM:
1): SLAWOMIR LACHCIK 3):
2): DAVID M HINES 4):

INSPECTION VISITS:
Inspection Date: 2/1/2013 **Start Time:** 9:15 AM
Temperature: 28 °F **End Time:** 2:45 PM
Inspection Date: 3/28/2013 **Start Time:** 9:00 AM
Temperature: 34 °F **End Time:** 3:15 PM

58. DECK

OVERALL RATING 3

	RATING	
1. OVERLAY	N	
2. DECK-STR. CONDITION	3	The orthotropic deck is made from riveted built-up steel plates and angles in a corrugated configuration; the corrugations are in the transverse direction (perpendicular to the span). There is up to 1/4" pitting section losses with knife edges remaining and rusted-through holes at random locations of the trough web plates, particularly under the active track. There are holes up to 31" long x 5" high (located at trough 31-N (ie the north web of trough 31), east of G2) in the trough web plates, under the active track between G2 and G3, span 2. Additionally, the trough 55-N has holes 33" x 4", 6" x 4" and 12" x 5". The horizontal plate at the top of the steel deck corrugations has up to ¼" deep section loss and rusted-out rivet heads near and underneath the timber ties. The protective coating of the deck has failed up to 90% throughout. There is vegetation growth and debris accumulation in the deck troughs throughout. See field notes sheets 4-14 and photos 9-16.
3. CURBS	4	The bridge timbers/wooden blocking between the deck top plates and the tie plates show extensive checking, splitting, rotting, crushing and dislodgement. The sloped concrete curbing cast against the inside base of the through-girder webs has numerous hollow areas and spalls, typically 2' x 1' x 2" deep, and scaling, up to 3" deep, throughout. See field notes sheet 4 and photos 9-12.
4. MEDIAN	N	
5. SIDEWALKS	N	
6. PARAPET	N	
7. RAILING	N	
8. PAINT	1	Protective coating of the deck has failed up to 90% throughout. See field note sheet 5 and photos 9-13.
9. DRAINS	3	The drain system and gutters servicing the deck are missing and/or abandoned and no longer functional.
10. LIGHTING STANDARD	N	
11. UTILITIES TYPE/SIZE	N	
12. CONSTRUCTION JOINTS	N	
13. EXPANSION JOINT	N	No joints visible at time of inspection.

59. SUPERSTRUCTURE

OVERALL RATING 4

	RATING	
1. BEARING DEVICES	3	The through-girder bearings on top of the columns exhibit up to 1" laminated rust with up to 3/16" section loss at the bearing plates at random locations. The bearings over the abutments were mostly obscured from view. The exposed areas have significant laminated rust with up to 1/8" section loss and heavy debris accumulation. Several anchor bolts between the girders and columns have up to 50% section loss due to rust, particularly G4 over column G4-N. See field notes sheets 5-11 and photos 21, 30.
2. STRINGERS	N	
3. GIRDERS	4	The girder ends exhibit severe section loss with up to 8" long x 2" wide rusted-out edges and up to knife edge (up to 3" wide x 5' long in span 3 of G3) remaining on the bottom flange plates at random locations. There is up to full length x 2" high x 1/8" section loss to the girder webs where the concrete curbs meet them, above the deck. The web stiffeners have perforations up to full width x 4" high at random locations. The girder bottom flange angles have heavy laminated rust and debris accumulation with up to 1/8" section loss on the horizontal legs and 2" high x 1/16" section loss on the vertical legs. There is an isolated full width x 4" x ¼" section loss with a 1" x ½" perforation at the underside of girder G2 bottom flange, near column G2-S in span 2. There is up to 1" pack rust at the girder bottom cover plates at random locations throughout. Rivet heads on

Connecticut Department of Transportation
Bridge Inspection Report BRI-18

BRIDGE #: 00600R **INSPECTION DATE:** 3/28/2013 **Snooper Required:** N
Inspection Type: ROUTINE **PREVIOUS INSPECTION DATE:** 6/3/2010 **Snooper Used:** N

		the girder bottom flanges have up to 90% section loss at random locations. There is extensive impact damage to the girder bottom flanges - see section 59.13. See field notes 3-14, 12 and photos 9-20.
4. FLOOR BEAMS	N	
5. TRUSSES-GENERAL	N	
TRUSSES-PORTALS	N	
TRUSSES-BRACING	N	
6. PAINT	1	The protective coating of the structural steel has failed up to 90% throughout. See field notes sheet 5 and photos 17-18.
7. RUST	3	There is up to 1" pack rust at the girder bottom cover plates at random locations throughout. See above items 59.1 and 59.3.
8 . MACHINERY MOV. SPAN	N	
9. RIVETS AND BOLTS	3	Rivet heads on the girder bottom flanges have up to 90% section loss at random locations. Various rivet heads are flattened/sheared off from impact damage: 10 rivet heads at G3 bottom flange, span 2, at trough 11. 3 rivet heads at G4 bottom flange, span 2, at trough 24. 3 rivet heads at G4 bototm flange, span 2, at trough 29. (Note that girder G4 no longer carries live load.) Rivet heads in the built-up troughs exhibit up to 90% section loss at random locations throughout. See field notes sheets 6-11 and photos 19-20.
10. WELDS-CRACKS	N	
11. TIMBER DECAY	N	
12. CONCRETE CRACKING	N	
13. COLLISION DAMAGE	4	All girder bottom flanges/cover plates in span 2 exhibit gouges and scrapes throughout, from impact damage. There are gouges up to 4" x 1" in G4 near trough 34. There is extensive impact damage to girder G4 bottom flange over the west- and eastbound lanes with several scrapes and gouges, up to 10" long x 2" wide at deck trough 29 and girder G4. There is a 12" long x 6" wide tear at the bottom flange cover plate, west side, of girder G4 and deck trough 24 over the travel lanes. There is a 8" x 2" gouge in the bottom flange cover plate of G4 at trough 30. As this girder no longer carries live load, the rating was changed kept as a 5, in accordance with the 2010 report. See field notes sheets 5-11 and photos 19-20.
14. ALIGNMENT OF MEMBERS	5	See above item 59.13
15. DEFLECTION UNDER LOAD	N	Observed to be normal.
16. VIBRATION UNDER LOAD	N	Observed to be normal.

60. SUBSTRUCTURE:

OVERALL RATING 3

	RATING	
1. ABUTMENTS STEM	4	The concrete abutment stems display random vertical cracks up to full height x 1/4" wide. There is moderate to severe scaling up to 10' x 2' x 3" deep at the east end of the south abutment, hollow areas and spalls up to 7' x 3' x 5" deep at the east end of the north abutment seat. The abutments have rust stains and areas of hairline map cracking with efflorescence throughout, up to 30' wide x full height at the east part of the south abutment. See field notes sheets 22-23 and photos 27-32.
BACKWALL	5	The backwalls between girders G2-4 are obscured by the orthotropic deck and not accessible for inspection. The top of backwalls and those exposed outside of G2-G4 have random longitudinal and transverse cracks, up to 1/8", hollow and spall areas up to 7' x 2' x 4" deep at the west end of the north backwall. See field notes sheets 22-23.
FOOTING	N	Not visible.
SETTLEMENT	6	Full height vertical cracks, open up to 1/4" in the south abutment stem. See field notes sheets 22-24 and photo 29.
WINGWALLS	4	The concrete wingwalls exhibit random cracks, up to 14' long x ½" wide along the southeast wingwall cap. There are several spall/scale areas within the wingwalls, up to 12' long x 4 ½' high x 2 ½" deep at the bottom of the southwest wingwall. There is hairline map cracking with efflorescence on the wingwalls, up to 70% of the total area of the northwest wingwall. See field notes sheet 24 and photos 31-32.
PIERS OR BENTS-CAPS	5	The built-up steel columns and corbels have heavy laminated rust on top of the bearing plates. See field notes sheet 5 and photo 21.

Connecticut Department of Transportation
Bridge Inspection Report BRI-18

BRIDGE #: 00600R **INSPECTION DATE:** 3/28/2013 **Snooper Required:** N
Inspection Type: ROUTINE **PREVIOUS INSPECTION DATE:** 6/3/2010 **Snooper Used:** N

PILE BENT	N	
COLUMN	3	**Note that this rating was decreased from a 4 to a 3 in 2010 (due to the enlargement of the hole in the web and further section losses) but the BRI-18 was not updated to reflect that change at that time - it has been corrected for this report and has also been corrected in the BRI-39.** There is typical significant section loss to the column bases: Cover plates: losses up to 1/4" x full width x 10" high (at col. G4-N), holes up to 2" diameter in the cover plate edges and up to 50% section loss to the angle legs. Webs: typically up to 1/4" x 8" wide section loss to the web plate. Column G2-N has a hole in its web plate up to 6" wide x 3" high, with 100% section loss to the rest of the exposed web plate around approximately a 1" band around the hole. See field notes sheets 15-21 and photos 22-26.
FOOTING	N	Not visible.
SETTLEMENT	8	
2. EROSION-SCOUR	7	Erosion: Rated a 7. There is minor erosion along the embankments behind the wingwalls, primarily from footpaths. Scour: N/A.
3. CONCRETE CRACK-SPALL	4	See item 60.1 'stem' and 'wingwalls' above.
4. STEEL CORROSION	4	See item 60.1 'pier or bents-caps' and 'column' above.
5. PAINT	3	protective coating on the columns has failed up to 60% throughout. See field notes sheet 16 and photos 21-26.
6. TIMBER DECAY	N	
7. COLLISION DAMAGE	6	There are several dents from impacts to the columns flanges, up to 23" high x 7" wide x 3" deep at column G4-N at mid-height. **Note that this item was upgraded from a 4 to a 6 in 2010, as the dent to column G3-N under the portion of the bridge that is carrying live load is minor relative to the other dents in columns that are not carrying live load.** See field notes sheets 14-15 and photo 24.
8. DEBRIS	5	There is heavy pigeon waste, debris accumulation and vegetation growth on top of the abutments and wingwalls. See field notes sheet 22 and photo 32.

61. CHANNEL & PROTECTION
OVERALL RATING N

62. CULVERTS & RETAINING WALLS
OVERALL RATING N

63. ESTIMATED REMAINING LIFE
YEARS

64. PERMIT CAPACITY (OFFICE ITEM)
N

65. APPROACH CONDITION
OVERALL RATING P

	RATING	
1. APPROACH SLAB	N	
2. RELIEF JOINTS	N	
3. APPROACH GUIDE RAIL	N	
PAVEMENT	N	
EMBANKMENT	8	
4. TRAFFIC SAFETY FEATURE	N	

Connecticut Department of Transportation
Bridge Inspection Report BRI-18

BRIDGE #: 00600R **INSPECTION DATE:** 3/28/2013 **Snooper Required:** N
Inspection Type: ROUTINE **PREVIOUS INSPECTION DATE:** 6/3/2010 **Snooper Used:** N

66. RATED LOADING

1. POSTED LOADING:	RATING	
SINGLE UNIT (TONS)	N	
SEMI TRAILER (TONS)	N	
3. ADVANCE WARNING Y/N	N	
4. LEGIBILITY	N	
5. VISIBILITY/LOCATION	N	

INSPECTORS APPRAISAL OF OVERALL STRUCTURE CONDITION: 3

MIN VERT. UNDERCLR. 13'-01"

At the center of span 2, girder G4. There is no shoulder striping: assuming a 1' shoulder off of the curb face this clearance governs, otherwise 13'-1" is not the minimum as the column corbels protrude into the travelway approximately 1' into the lane.

POSTED CLEARANCE: 12'-4"

There are advanced warning clearance signs approximately 200'-300' before the bridge on both approaches to the bridge and at about 20' from the fascias of the bridge. The two signs immediately before the east fascia both indicate 12'-10" and the two signs immediately before the west fascia indicate 12'-4" for the right eastbound lane and 12'-10" for the left eastbound lane.

See field notes sheet 3 and photos 33-34.

ADVANCE WARNING (Y/N): N

SPEED LIMIT (IF ANY): N MPH

CHARACTER OF TRAFFIC: Freight trains.

ADDITIONAL NOTES:

The newer bridge ID plaque has been vandalized and the older painted ID is fading (see photo 1). Bridge is logged from south to north, with girder G1 on the west fascia. The bridge was inspected with a 30' lift truck. There is a new maintenance memo with this report.

INVENTORY OF SHEETS IN COMPLETE REPORT

INV.: Y **PHOTOS:** Y **FLD NOTES** Y **JNT MSMNTS:** N **CLEAR DIAG.** Y **ATTACH:** Y

ADDITIONAL COMMENTS:

Inspectors' Signatures:
1) Damian Sala **Date:** 4/26/13
2) David M. Hoo **Date:** 4/26/13
3) **Date:** __/__/__
4) **Date:** __/__/__

P.E. Signature: Steve Dreher **Date:** 4/26/13
P.E.#: # 23441

Reviewed by: CDOT **Date:** 05/01/13

PURCELL ASSOCIATES	JOB NO: 170-2010	BRIDGE NO: 600R
SUPPLEMENTAL SHEET	DATE: 3/28/2013	SHEET 1 OF 31
TIME LOG		

DATE: 2/1/2013

		DESCRIPTION	TIME AT SITE	
WEATHER: 28°, P. SUNNY	CREW:	SL, DMH	0915	to 1445
EQUIP. LIST VAN	SNOOPER:	—		to
33' LIFT TRUCK	~~BACKUP TRUCK:~~	JIM GEBO	0900	to 1445
—	RR FLAGMAN:	J. STADALNIK, # 730	0930	to 1300
VISITOR: —	POLICE:	H. MCATEE, # 762	1300	to 1445

TC & NOTES Local lane restrictions on W. Main St.

DATE: 3/28/2013

		DESCRIPTION	TIME AT SITE	
WEATHER: 34°, P. SUNNY	CREW:	SL, DMH	0900	to 1515
EQUIP. LIST VAN	SNOOPER:	—		to
33' LIFT TRUCK	~~BACKUP TRUCK:~~	JIM GEBO	0900	to 1500
—	RR FLAGMAN:	J. LANURE # 593	0900	to 1230
VISITOR: —	POLICE:	K. BORER # 587	1230	to 1500

TC & NOTES Local lane restrictions on W. Main St.

DATE:

		DESCRIPTION	TIME AT SITE	
WEATHER:	CREW:			to
EQUIP. LIST	SNOOPER:			to
	BACKUP TRUCK:			to
	RR FLAGMAN:			to
VISITOR:	POLICE:			to

TC & NOTES

DATE:

		DESCRIPTION	TIME AT SITE	
WEATHER:	CREW:			to
EQUIP. LIST	SNOOPER:			to
	BACKUP TRUCK:			to
	RR FLAGMAN:			to
VISITOR:	POLICE:			to

TC & NOTES

FIELD NOTES

PURCELL ASSOCIATES

JOB NO:	170-2010	BRIDGE NO:	600R
DATE:	3/28/2013	SHEET 2	OF 31
CREW:	SL, DMH	DESCRIPTION:	KEY/FRAMING PLAN

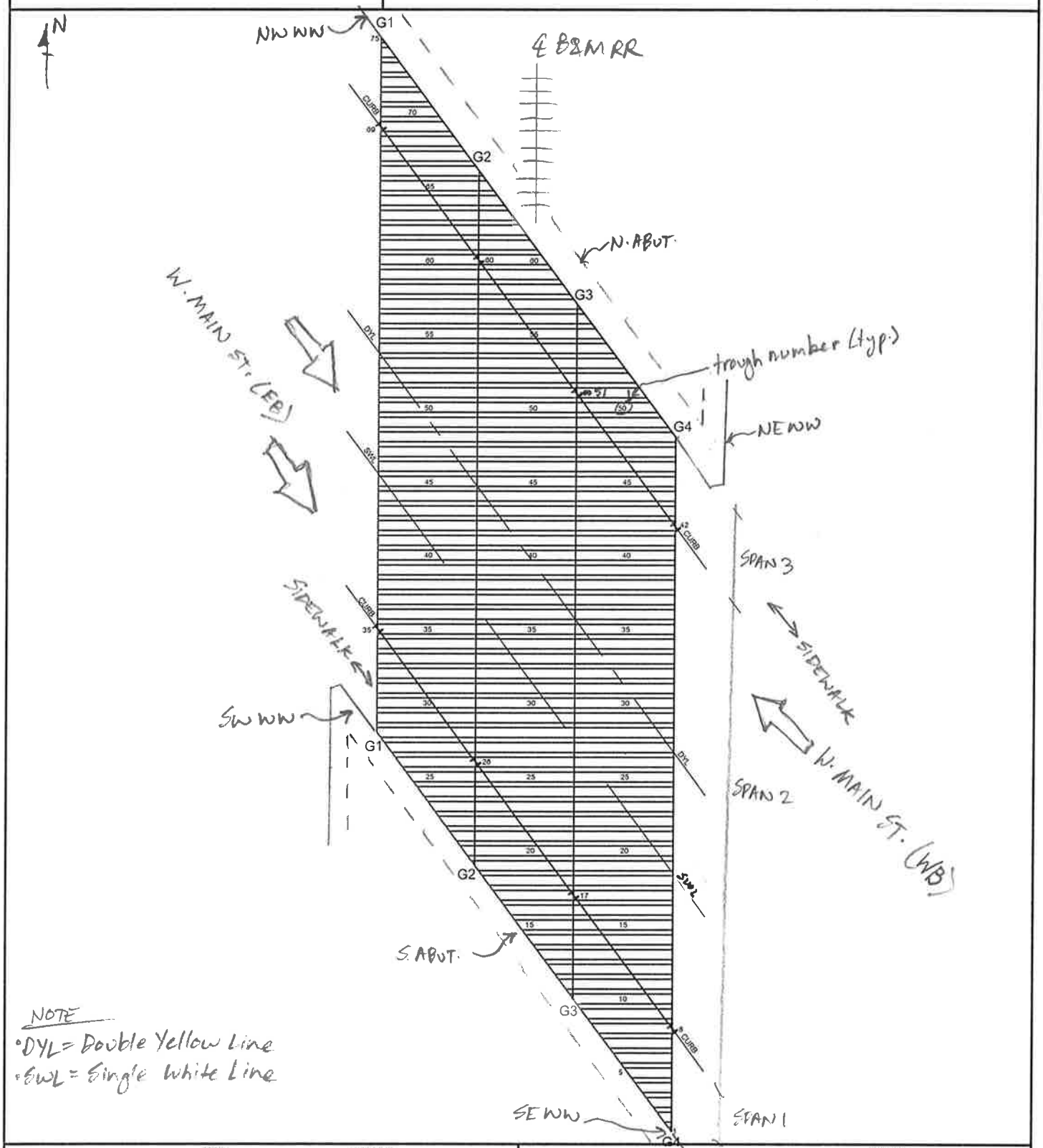

NOTE
- DYL = Double Yellow Line
- SWL = Single White Line

REVISION	DATE	CREW	COMPANY	REVISION	DATE	CREW	COMPANY
REVISION	DATE	CREW	COMPANY	REVISION	DATE	CREW	COMPANY

FIELD NOTES

PURCELL ASSOCIATES

JOB NO: 170-2010		BRIDGE NO: 600R	
DATE: 6/3/10		SHEET 23	OF 31
CREW: DAL DMH	DESCRIPTION: CLEARANCE DIAGRAM		

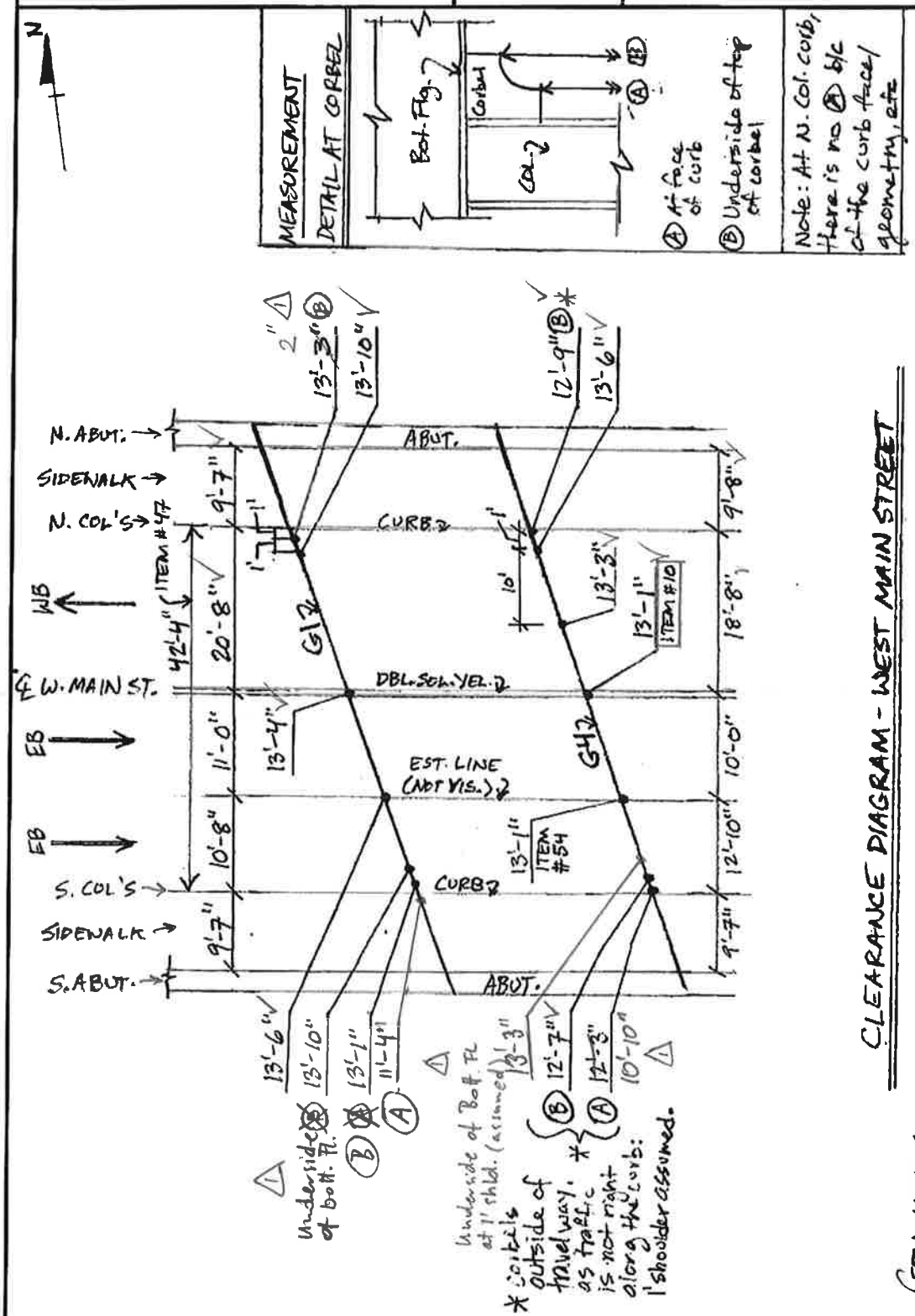

CLEARANCE DIAGRAM - WEST MAIN STREET

GEN. NOTES

- Clearances at bottom flanges taken to protruding rivet heads for minimum
- No painted lines at curbs, so no shoulder line between EB lanes no longer visible (est.)
- Clearance signs (12'-10" posted) at NE & SE corners of bridge & 200-300' away on approaches
  - ~~West approach clearance sign @ Thomaston Ave. int. knocked down~~
  - New advance clearance warning signs 20' W of Br. facing EB traffic - Left lane: 12'-10" Right lane: 12'-4"

REVISION	DATE	CREW	COMPANY	REVISION	DATE	CREW	COMPANY
1	3/28/13	SL/DMH	Purcell				

FIELD NOTES

Engineers, Inc.

DESCRIPTION: Top of Deck & Thru-Girders

JOB NO: 170-2010 | BRIDGE NO: 00600R

DATE: 03/11/08 | SHEET 34 OF 31

CREW: SE, BNS, DY

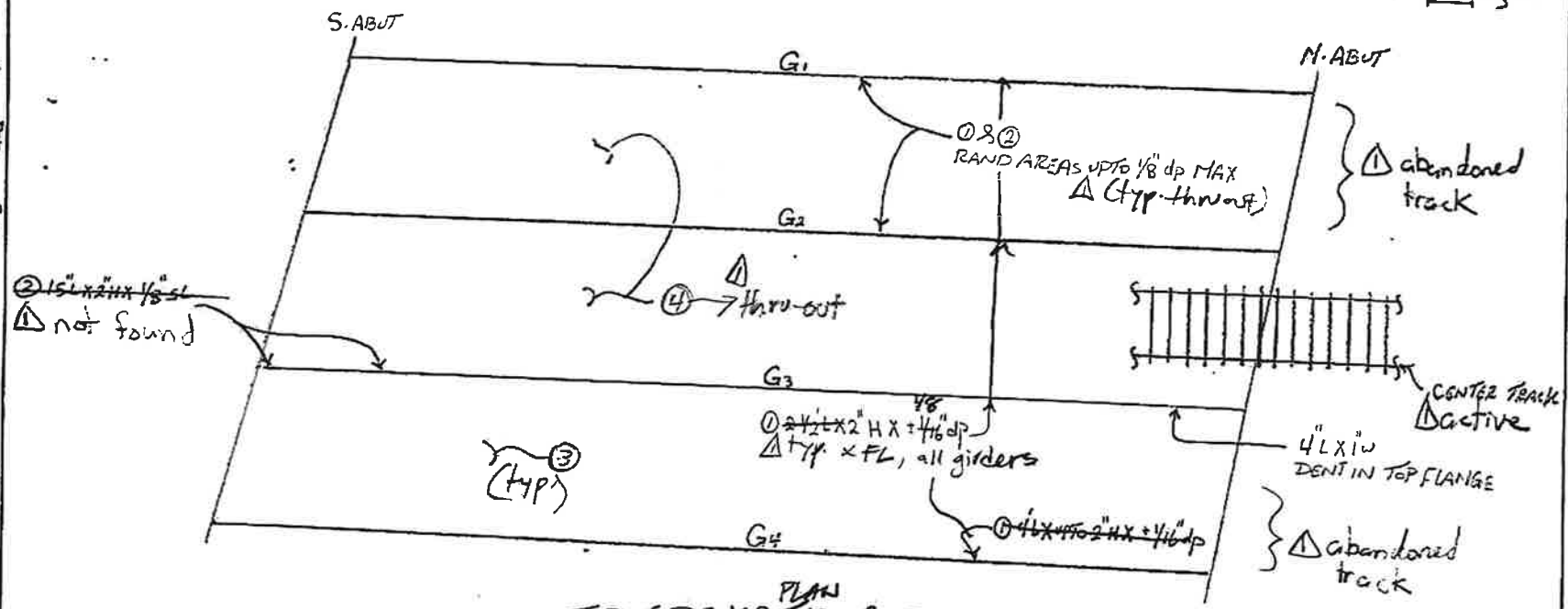

TOP OF DECK ~~& THRU-GIRDERS~~ PLAN

GENERAL NOTES

- 2" HIGH WEB AREA ABOVE THE SLOPED CONCRETE CURB W/ MINOR SECTION LOSSES AT RANDOM LOCATIONS.
- TOP COVER PLATES & FLANGES W/ MOD-HVY RUST W/ NEG SECTION LOSSES AT RANDOM LOCATIONS.
- PROTECTIVE COATING PAINT HAS FAILED UP TO 100%.
- SLOPED CONCRETE CURBS ALONG GIRDERS EXHIBITS RANDOM VT HLC'S, HL MAP CRACKING WITH & WITHOUT EFFLO & RUST, RANDOM HA'S UP TO 2'x1', NUMEROUS SPALLS UP TO 2'x1'x2" dp & AREAS OF MOD-HVY SCALING UP TO 3" dp.
- Δ Wooden ~~OAK~~ BLOCKINGS under rail EXHIBIT RANDOM CHECKING & SPLITS & rotted THROUGHOUT. ~~12~~ BROKEN BLOCKS ~~NEAR SOUTH END OF CENTER TRACK.~~ & CRUSHED ~~BLOCKS & ONE~~ MISSING BLOCK ~~NEAR N. END OF CENTER TRACK~~. Typical throut
- Δ WOOD STRAPINGS EXHIBITS EXTENSIVE CHECKING & SPLITING AT RANDOM LOCATIONS. & Rotting. ~~THE TWO WOOD ALONG EAST TRACK BETWEEN G3 & G4 W/ HVY ROTTING. THE WEST STRAPPING BETWEEN G2 & G3 IS 100% GONE DUE TO SEVERE ROTTING.~~ Δ Timber strapping has up to 100% SL at random loc's

LEGEND

- E EFFLORESCENCE
- HAIRLINE CRACKS
- MAP CRACKS
- HOLLOW AREA
- SHALLOW REBAR
- SCALE AREA
- SPALL AREA
- SPALL AREA w/EXPOSED REBAR
- HONEY COMBING

✓ ONLY CENTER TRACK IS ACTIVE.

Δ conc. in troughs is mod. scaled, w/ debris & plants

Δ No change

Δ DETERIORATION NOTES

① PITTING LOSS IN WEB AREA ABOVE SLOPED CONCRETE CURB.

② SECTION LOSS IN WEB AREA ABOVE SLOPED CONCRETE CURB.

③ DECK & RIVETS W/ MOD-HVY LAMINAR RUST W/ NEG. SECTION LOSSES. (through sections)

④ DECK W/ NUMEROUS AREAS OF SECTION LOSSES UP TO 1/4" dp & RIVETS W/ UP TO 100% SECTION LOSS. (through sections) (thru-out)

Revision	Date	Crew	Company
Δ	6/2/10	DAL, DMH	FORCELL
Δ	3/20/13	SL, DMH	FORCELL

AI Engineers, Inc.

FIELD NOTES

JOB NO: 170-2010 BRIDGE NO: 00600R

DATE: 03/11/06 SHEET ~~15~~ 5 OF ~~27~~ 31

DESCRIPTION: FRAMING PLAN CREW: BNS, SE, DY

GENERAL NOTES :-

- RANDOM GOUGES & SCRAPE MARKS ON BOTTOM FLANGE DUE TO IMPACT DAMAGE THROUGH OUT. ✓
- UP TO 90% FAILING PROTECTION COATING AT STRUCTURAL STEEL THROUGHOUT. ✓
- SCRAPE MARKS, MINOR DENTS & GOUGES AT GIRDERS BOTTOM FLANGE (TYP.). ✓
- THIS BRIDGE HIT SEVERAL TIMES DUE TO LOW CLEARANCE W/ NO CRACKS NOTED. ✓
- MOD TO HVY EFFLO DEPOSITS AROUND UNDERSIDE OF DRAINAGE SYSTEM AT RANDOM LOCATIONS W/ UP TO 4" ϕ X 1/4" dp PITTING AT DECK AROUND WEEPS. ✓
- HVY LAM RUST W/ UP TO 1/8" LOSS AT BOTTOM OF DECK & GIRDERS CONNECTIONS AT RANDOM LOCATIONS. ✓
- UP TO 1/2" LAM RUST AT COLUMN BRGS W/ UP TO 3/16" S. LOSS AT GIRDER BRG PLATES THROUGHOUT. ✓
- RIVET HEADS ROSEBUDING THROUGHOUT W/ ~~NEG. S. LOSS (DECK SYSTEM)~~ & UP TO ~~60%~~ 90% S. LOSS AT THOSE OVER THE TOP OF GIRDER BOTTOM FLANGE (TYP.), & AT DECK TROUGHS ✓
- BOTTOM 4" OF GIRDER STIFFENERS W/ HVY LAM RUST & RUSTED THROUGH HOLES THROUGHOUT. ✓
- DECK DRAINAGE WEEPS DRY AT TIME OF INSPECTION. SOME W/ICICLES
- LIGHT FILM OF ~~COAT~~ DIRT & DUST COVERING THE STRUCTURAL STEEL / UNDERSIDE OF DECK. ✓
- ~~1/8" PACK RUST AT DECK ENDS OVER GIRDERS & 1/8" X FW X 8" L S. LOSS AT BOTTOM FLANGE (TYP.).~~
- MOD RUST W/ NEG. S. LOSS AT BOTTOM OF DECK UNITS & GIRDERS THROUGHOUT EXCEPT AS NOTED. ✓
- MOD TO HVY ACCUMULATION OF RUST & DEBRIS ON TOP OF BOTTOM FLANGE THROUGHOUT (1/8" S. LOSS) X FL ✓
- HVY PACK RUST AT BOTTOM FLANGE GIRDER PLATES UP TO 1" THICK THROUGHOUT. ✓
- DECK & GIRDER BRGS OVER ABUTMENTS ARE NOT FULLY ACCESIBLE FOR HANDS ON INSPECTION. THE VISIBLE PART HAS MOD LAM RUST W/ 1/8" S. LOSS THROUGHOUT. ✓
- MOD TO HVY RUST W/ UP TO 1/16" X 2" H LOSS AT VT LEG OF BOTTOM FLANGE & AT RANDOM LOCATIONS. ✓

	Date	Crew	Company		Date	Crew	Company
Revision 1	6/2/10	DAL, DMH	PURCELL	Revision			
Revision 2	3/28/13	SL, DMH	PURCELL	Revision			

FIELD NOTES

PURCELL ASSOCIATES

JOB NO:	170-2010	BRIDGE NO:	600R
DATE:	3/28/2013	SHEET 6	OF 31
CREW:	SL, DMH	DESCRIPTION:	FRAMING PLAN

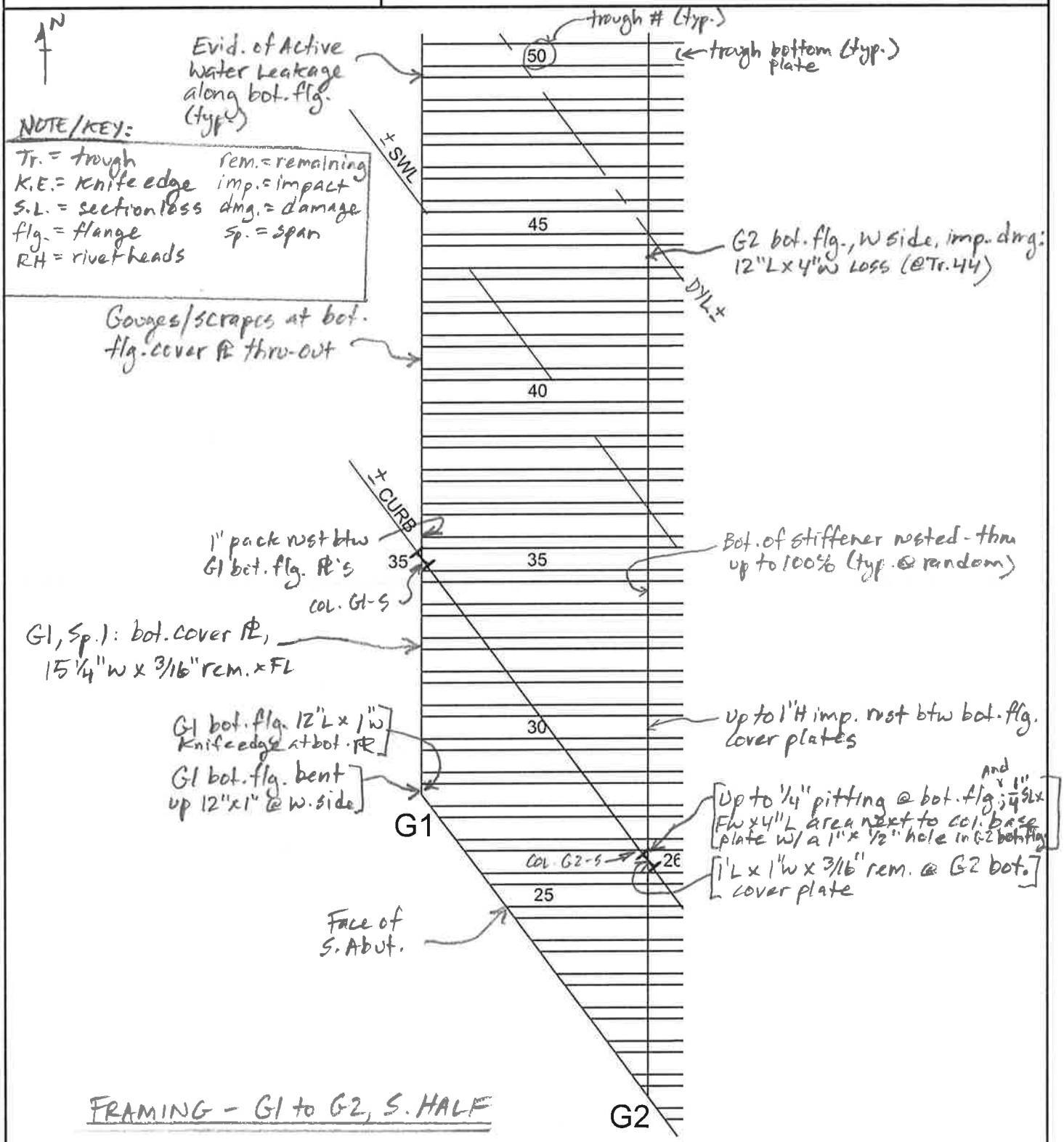

FRAMING - G1 to G2, S. HALF

REVISION	DATE	CREW	COMPANY	REVISION	DATE	CREW	COMPANY
REVISION	DATE	CREW	COMPANY	REVISION	DATE	CREW	COMPANY

FIELD NOTES

PURCELL ASSOCIATES

JOB NO:	170-2010	BRIDGE NO:	600R
DATE:	3/28/2013	SHEET 7	OF 31
CREW:	SL, DMH	DESCRIPTION:	FRAMING PLAN CT'D

N

NOTES
- Tr. 16-N means trough #16, north web
- 9"x1" perf means a perforation 9"L x 1"H
- See sht's 11 & 12 for sections A-A and X-X

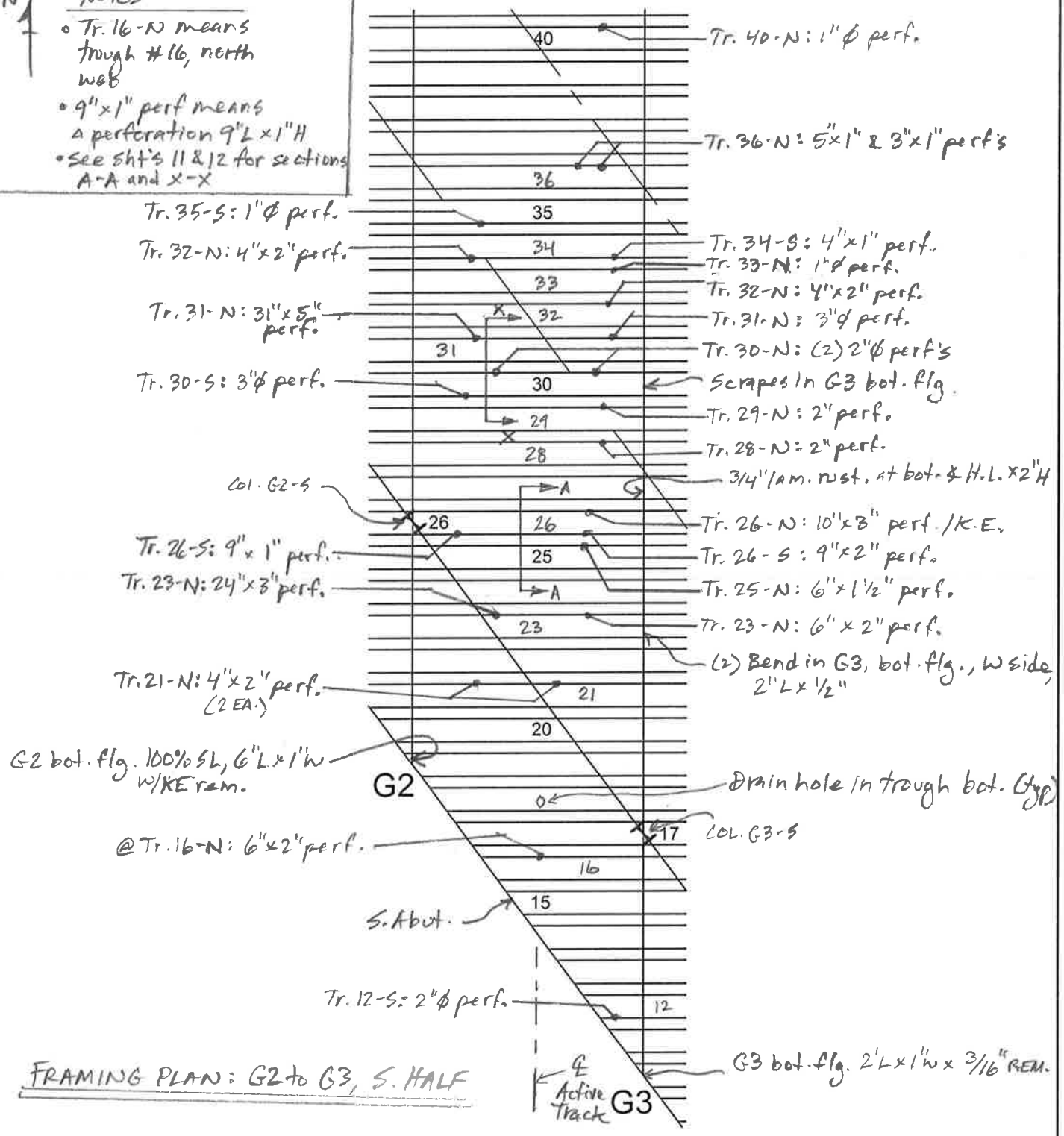

FRAMING PLAN: G2 to G3, S. HALF

REVISION	DATE	CREW	COMPANY	REVISION	DATE	CREW	COMPANY
REVISION	DATE	CREW	COMPANY	REVISION	DATE	CREW	COMPANY

FIELD NOTES

PURCELL ASSOCIATES

JOB NO:	170-2010	BRIDGE NO:	600R
DATE:	3/28/2013	SHEET 8	OF 31
CREW:	SL, DMH	DESCRIPTION:	FRAMING PLAN CT'D

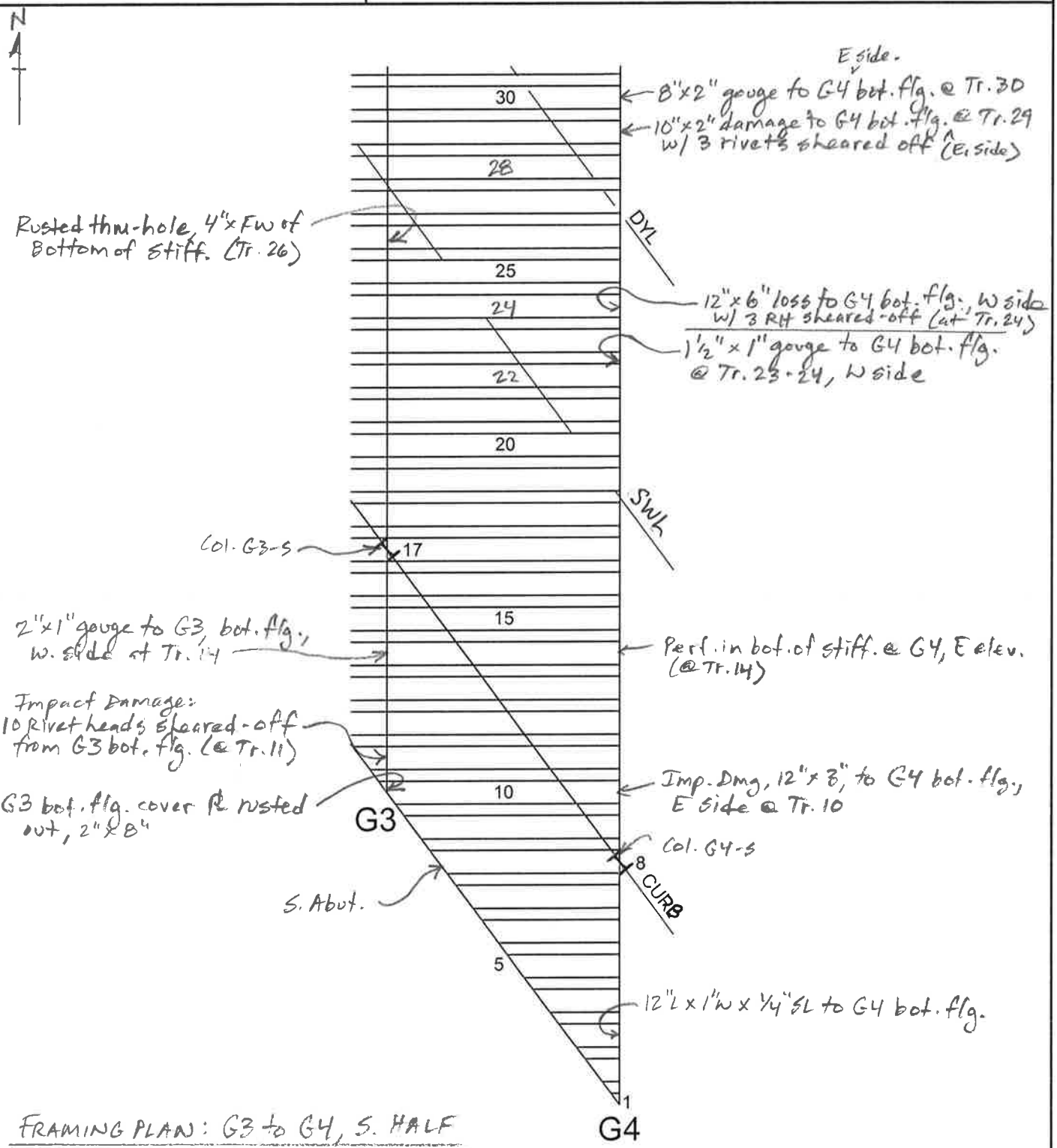

FRAMING PLAN: G3 to G4, S. HALF

REVISION	DATE	CREW	COMPANY	REVISION	DATE	CREW	COMPANY
REVISION	DATE	CREW	COMPANY	REVISION	DATE	CREW	COMPANY

FIELD NOTES	JOB NO: 170-2010	BRIDGE NO: 600R
PURCELL ASSOCIATES	DATE: 3/28/2013	SHEET 9 OF 31
	CREW: SL, DMH	DESCRIPTION: FRAMING PLAN CT'D

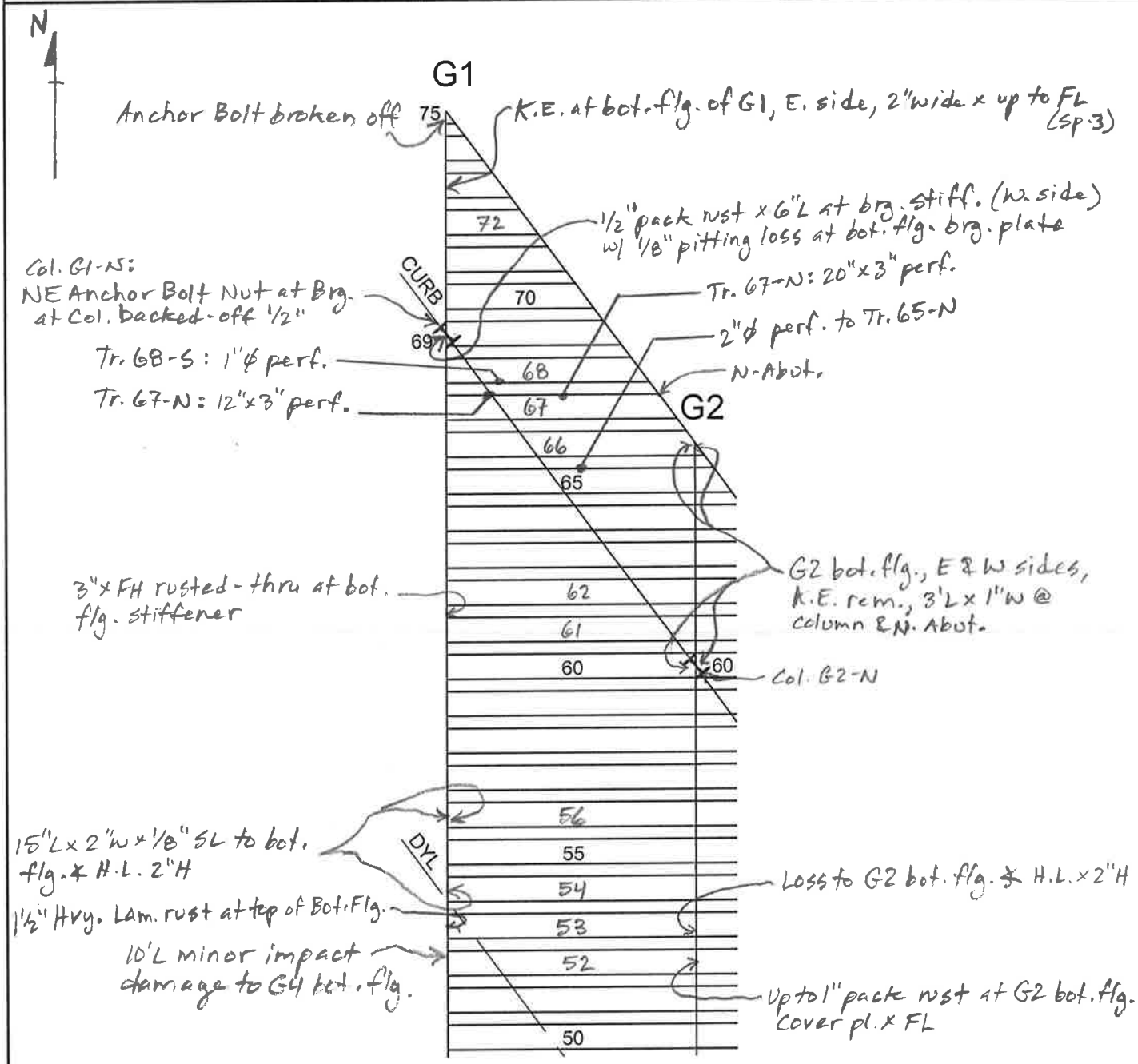

FRAMING PLAN: G1 to G2, N. HALF

REVISION	DATE	CREW	COMPANY	REVISION	DATE	CREW	COMPANY
REVISION	DATE	CREW	COMPANY	REVISION	DATE	CREW	COMPANY

FIELD NOTES

PURCELL ASSOCIATES

JOB NO:	170-2010	BRIDGE NO:	600R
DATE:	3/28/2013	SHEET 10	OF 31
CREW:	SL, DMH	DESCRIPTION:	FRAMING PLAN CT'D

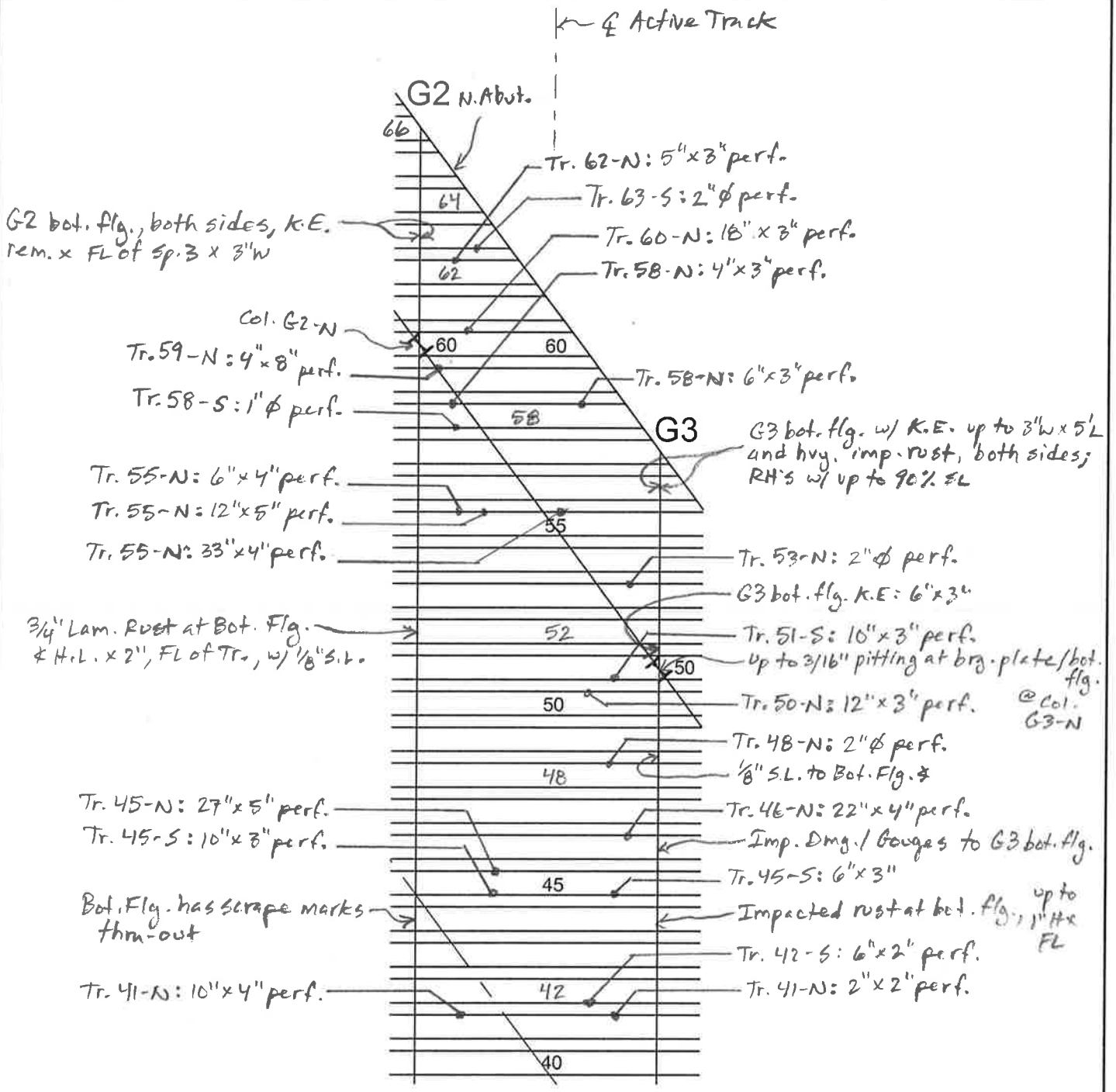

FRAMING PLAN: G2 to G3, N. HALF

REVISION	DATE	CREW	COMPANY	REVISION	DATE	CREW	COMPANY
REVISION	DATE	CREW	COMPANY	REVISION	DATE	CREW	COMPANY

FIELD NOTES

PURCELL ASSOCIATES

JOB NO:	170-2010	BRIDGE NO:	600R
DATE:	3/28/2013	SHEET 11	OF 31
CREW:	SL, DMH	DESCRIPTION:	FRAMING PLAN CT'D

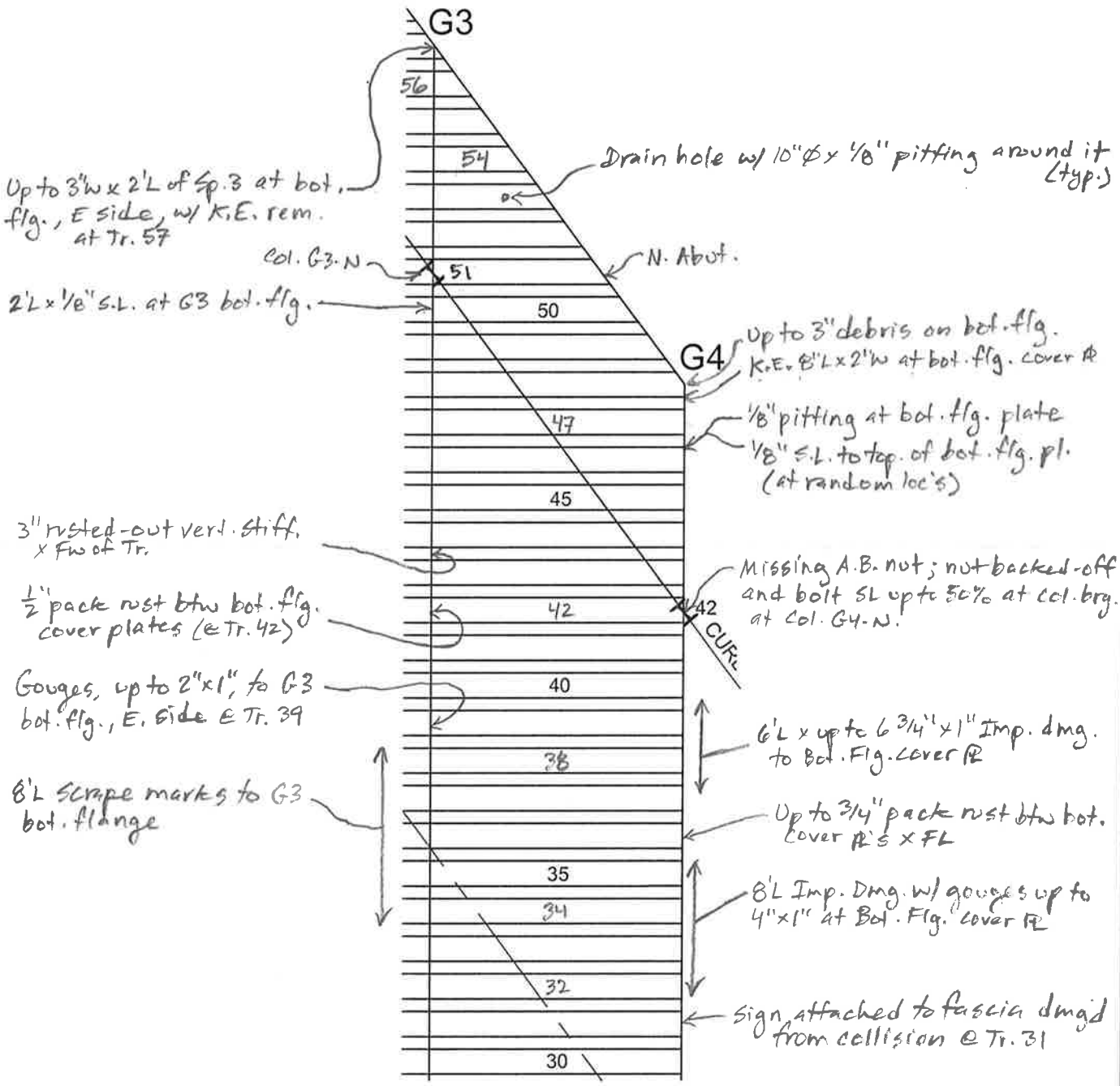

FRAMING PLAN: G3 to G4, N. HALF

REVISION	DATE	CREW	COMPANY	REVISION	DATE	CREW	COMPANY
REVISION	DATE	CREW	COMPANY	REVISION	DATE	CREW	COMPANY

FIELD NOTES

PURCELL ASSOCIATES

JOB NO: 170-2010		BRIDGE NO: 600R	
DATE: 6/3/10		SHEET ~~11~~ 12A	OF ~~27~~ 31
CREW: DAL DMH	DESCRIPTION: DECK TROUGH SECTION A-A		

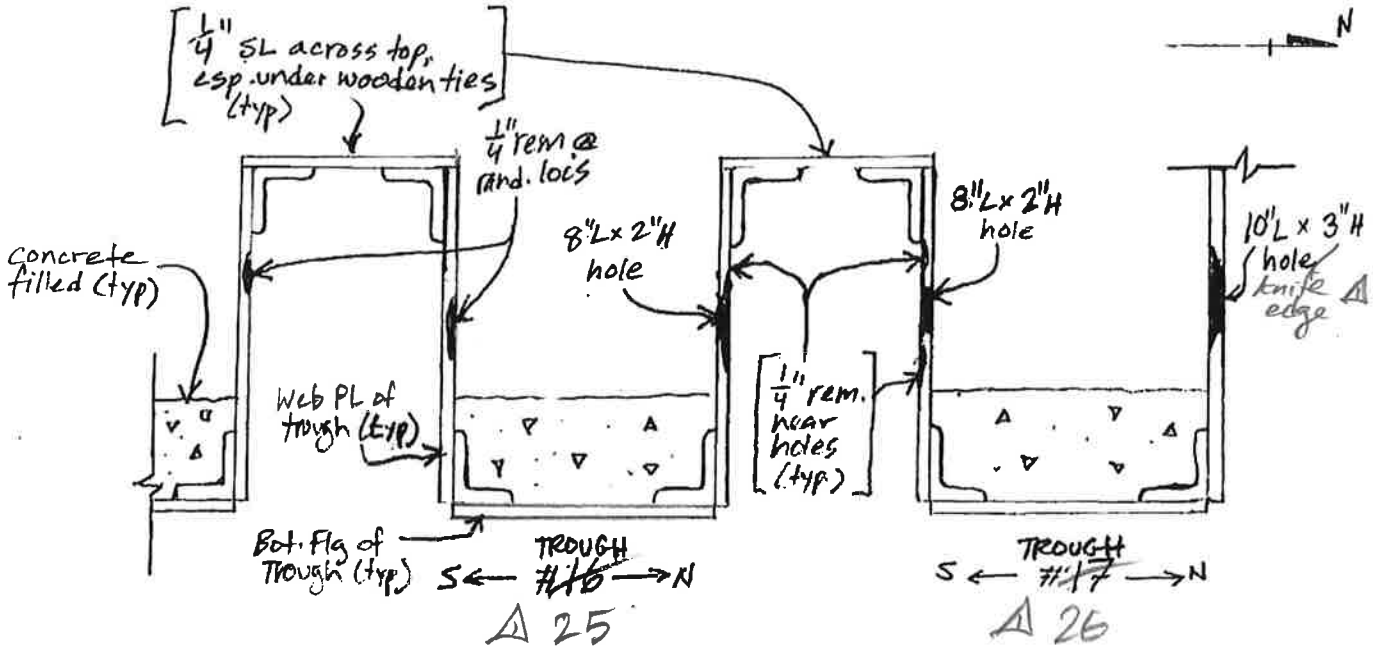

SECTION A-A THRU DECK, SPAN 2 BTW. G2 & G3, LOOKING W

(See sheet 8 for location)

NOTES

N/A

REVISION	DATE	CREW	COMPANY	REVISION	DATE	CREW	COMPANY
1	3/28/13	SL, DMH	PURCELL				

FIELD NOTES

PURCELL ASSOCIATES

JOB NO: 170-2010		BRIDGE NO: 600R	
DATE: 6/3/10		SHEET ~~11~~ 13 ~~8~~ OF ~~27~~ 31	
CREW: DAL DMH	DESCRIPTION: DECK TROUGH SECTION X-X		

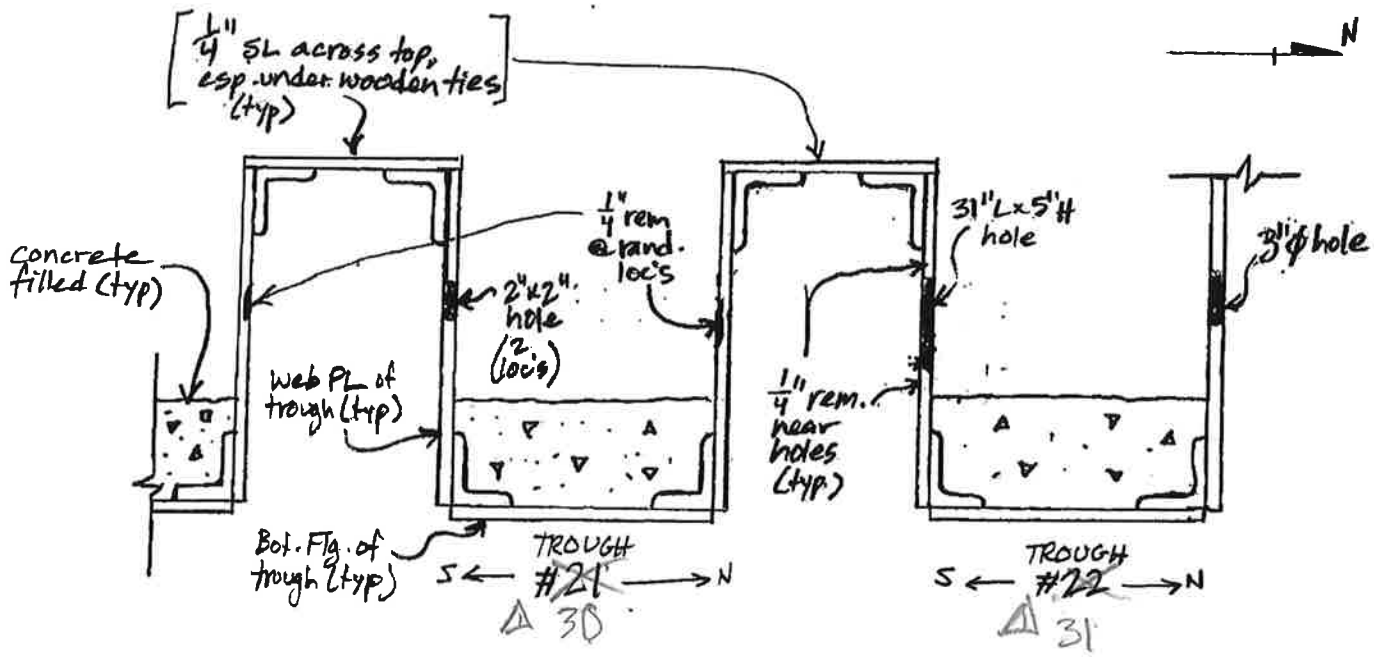

SECTION X-X THRU DECK, SPAN 2 BTW. G2 & G3, LOOKING W

(see sheet 8 for location)

NOTES

- N/A

REVISION	DATE	CREW	COMPANY	REVISION	DATE	CREW	COMPANY
1	3/28/13	SL, DMH	PURCELL				

FIELD NOTES

PURCELL ASSOCIATES

JOB NO: 170-2010		BRIDGE NO: 6CCR	
DATE: 6/3/10		SHEET ~~12~~ 14 OF ~~27~~ 31	
CREW: DAL DMH	DESCRIPTION: DECK TROUGH ELEV.		

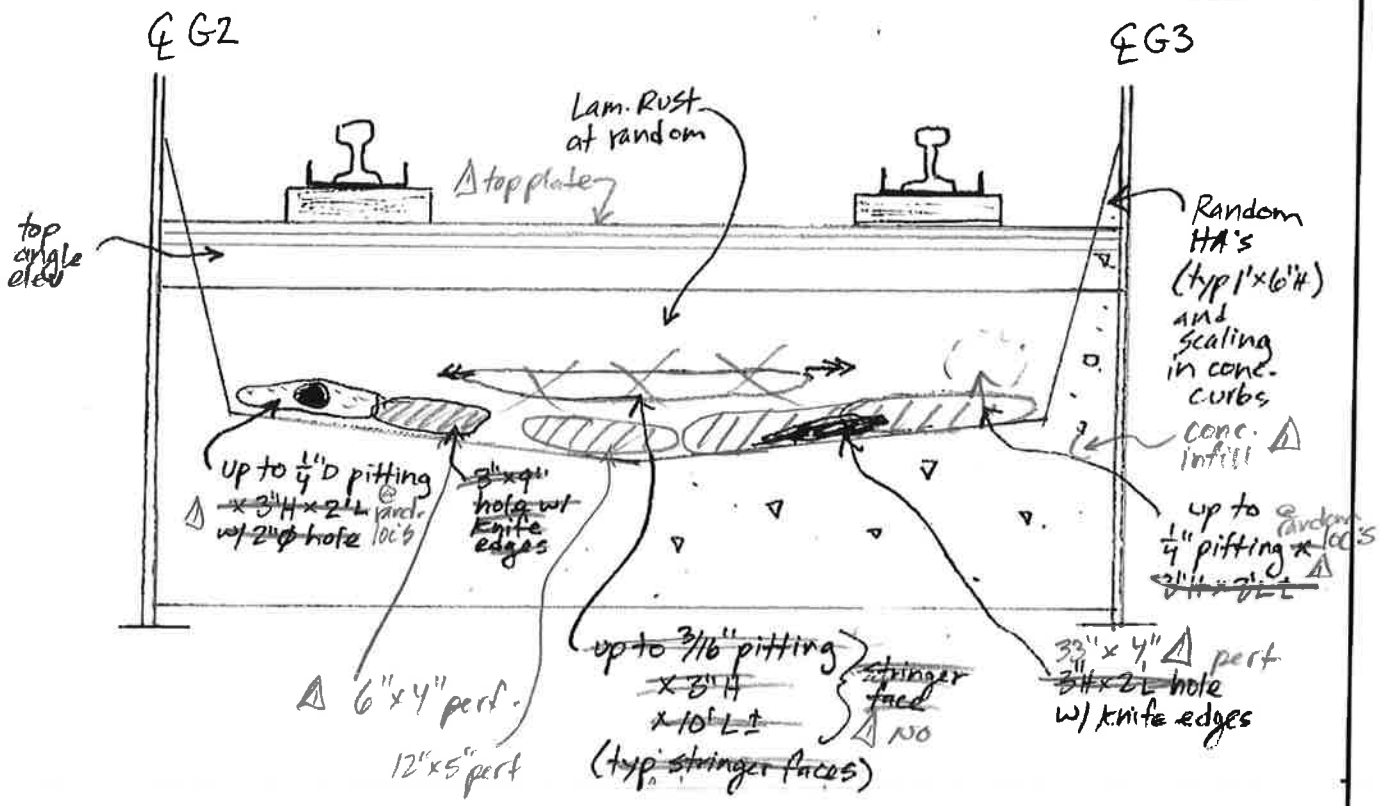

SOUTH ELEVATION OF DECK TROUGH ~~#47~~ 55-N

(UNDER ACTIVE TRACK)

Notes

- see 'Deck Trough Section' for typical section thru deck

REVISION	DATE	CREW	COMPANY	REVISION	DATE	CREW	COMPANY
1	3/28/13	SL, DMH	PURCELL				

FIELD NOTES

PURCELL ASSOCIATES

JOB NO: 170-2010		BRIDGE NO: 600R	
DATE: 6/3/10		SHEET ~~13~~ 15 OF ~~27~~ 31	
CREW: DAL, DMH	DESCRIPTION: COLUMN ELEV'S		

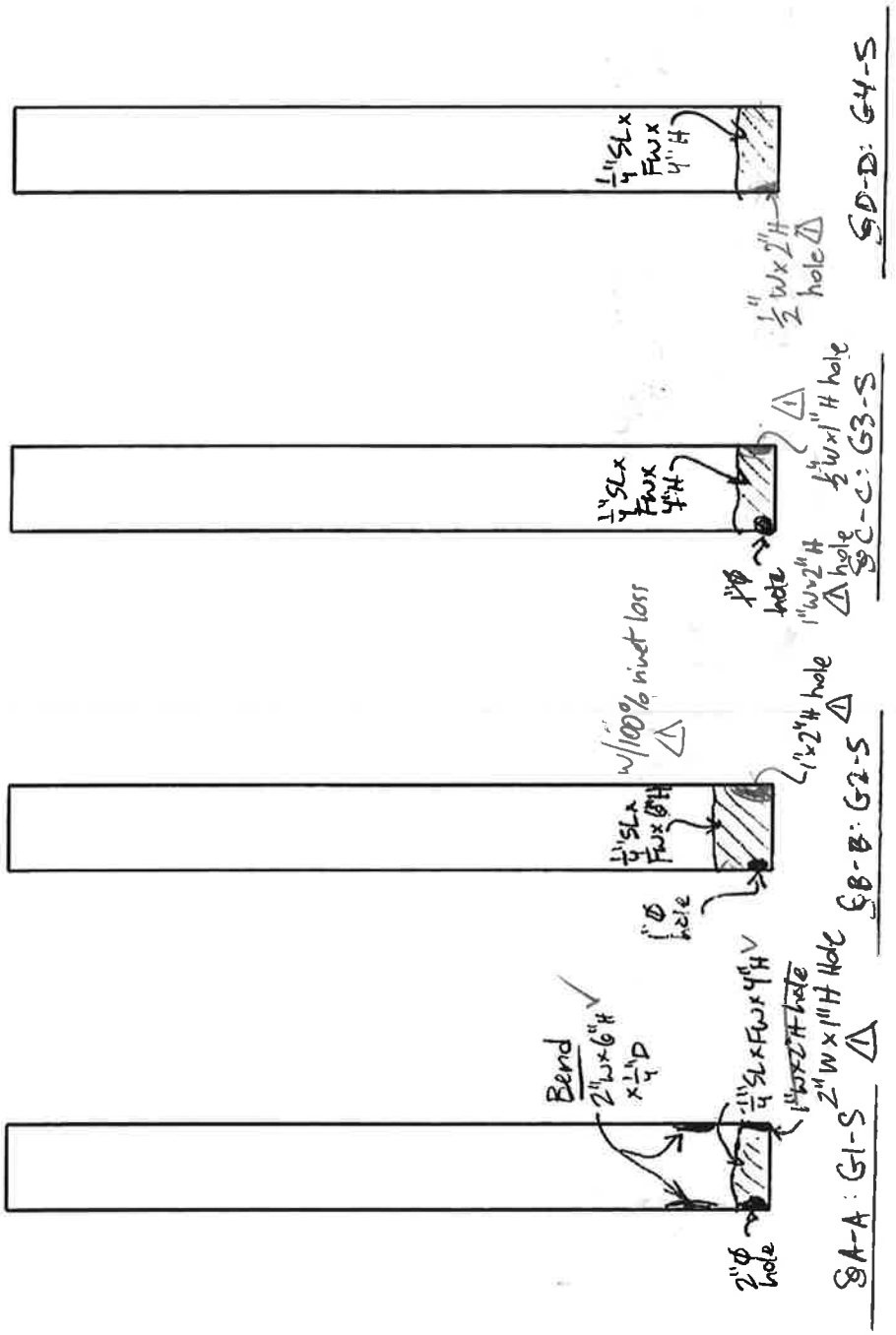

SOUTH COLUMNS, SOUTH ELEVATIONS

Gen. Notes

- Same as 'S. Col's, N. Elev's' notes

REVISION	DATE	CREW	COMPANY	REVISION	DATE	CREW	COMPANY
1	3/28/13	SL / DMH	Purcell				

FIELD NOTES

PURCELL ASSOCIATES

JOB NO: 170-2010	BRIDGE NO: 600R
DATE: 6/3/10	SHEET ~~14~~ 16 OF ~~27~~ 31
CREW: DAL, DMH	DESCRIPTION: COLUMN ELEV'S

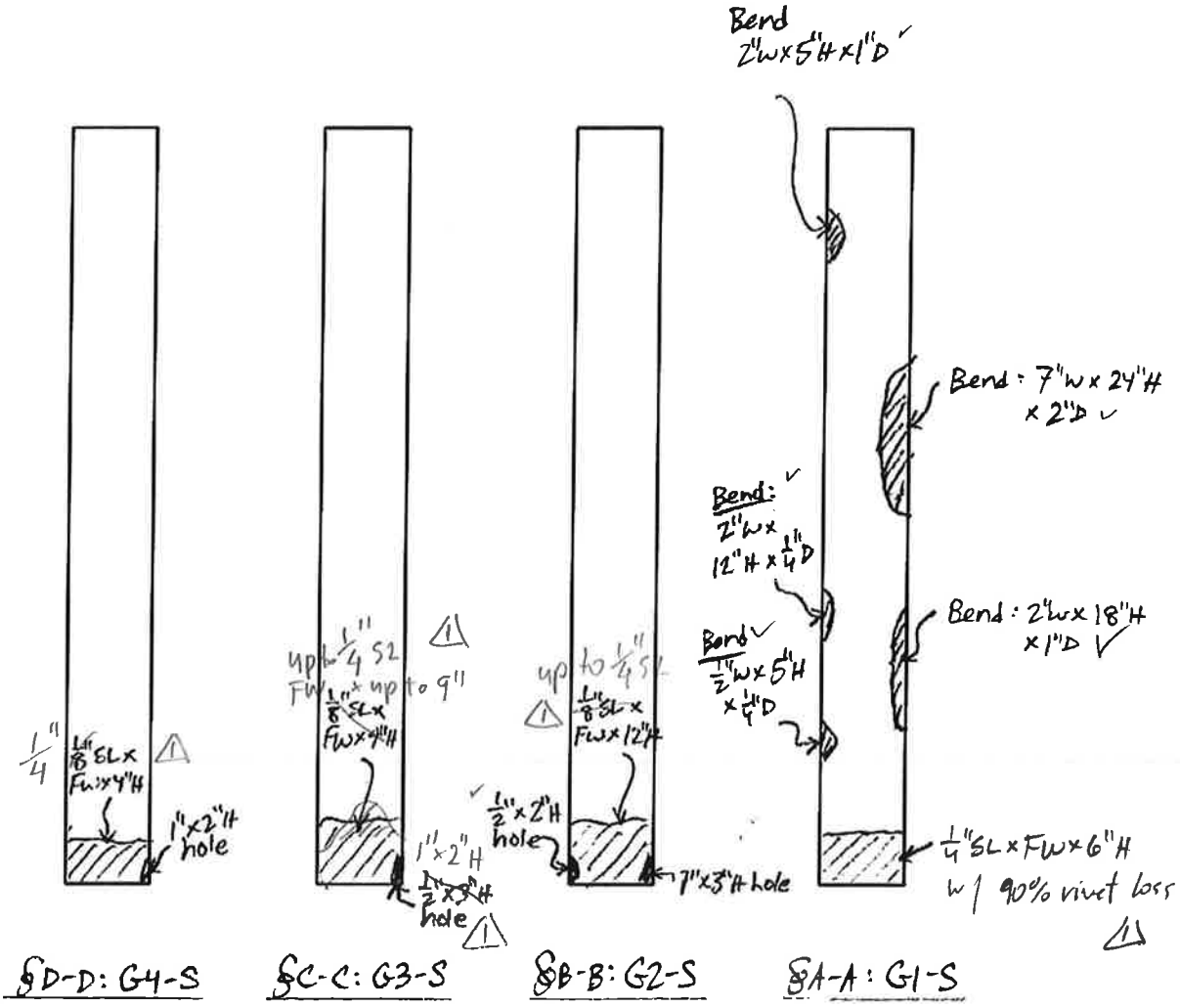

SOUTH COLUMNS, NORTH ELEVATIONS

General Notes

- Rivet heads show 20-30% loss near ground level; peeling prot. coating thru-out
- Random scupper brackets/attachments broken
- Columns' protective coating gone up to ~~50%~~. 60%
  downspouts

REVISION	DATE	CREW	COMPANY	REVISION	DATE	CREW	COMPANY
1	3/28/13	SL/DMH	Purcell				

FIELD NOTES

PURCELL ASSOCIATES

JOB NO: 170-2010		BRIDGE NO: 600R	
DATE: 6/3/10		SHEET ~~15~~ 17 OF ~~27~~ 31	
CREW: DAL, DMH	DESCRIPTION: COLUMN ELEV'S		

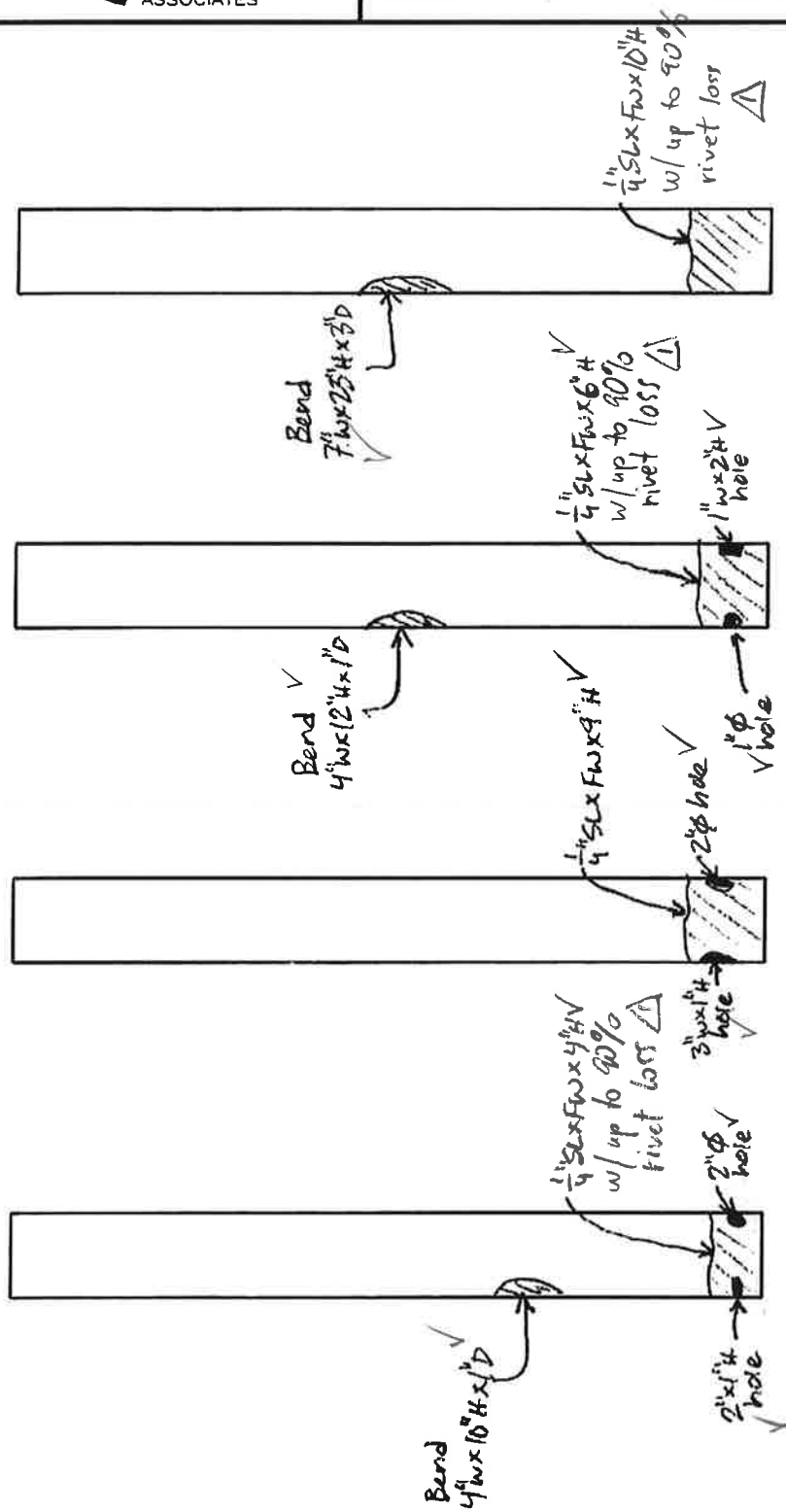

NORTH COLUMNS, SOUTH ELEVATION

Gen. Notes
- Same as 'S. Col's, N. Elev's' notes

REVISION	DATE	CREW	COMPANY	REVISION	DATE	CREW	COMPANY
△	3/28/13	SL / DMH	Purcell	△			
△				△			

FIELD NOTES

PURCELL ASSOCIATES

JOB NO: 170-2010		BRIDGE NO: 600R	
DATE: 6/3/10		SHEET 18 OF 31	
CREW: DAL, DMH	DESCRIPTION: COLUMN ELEV'S		

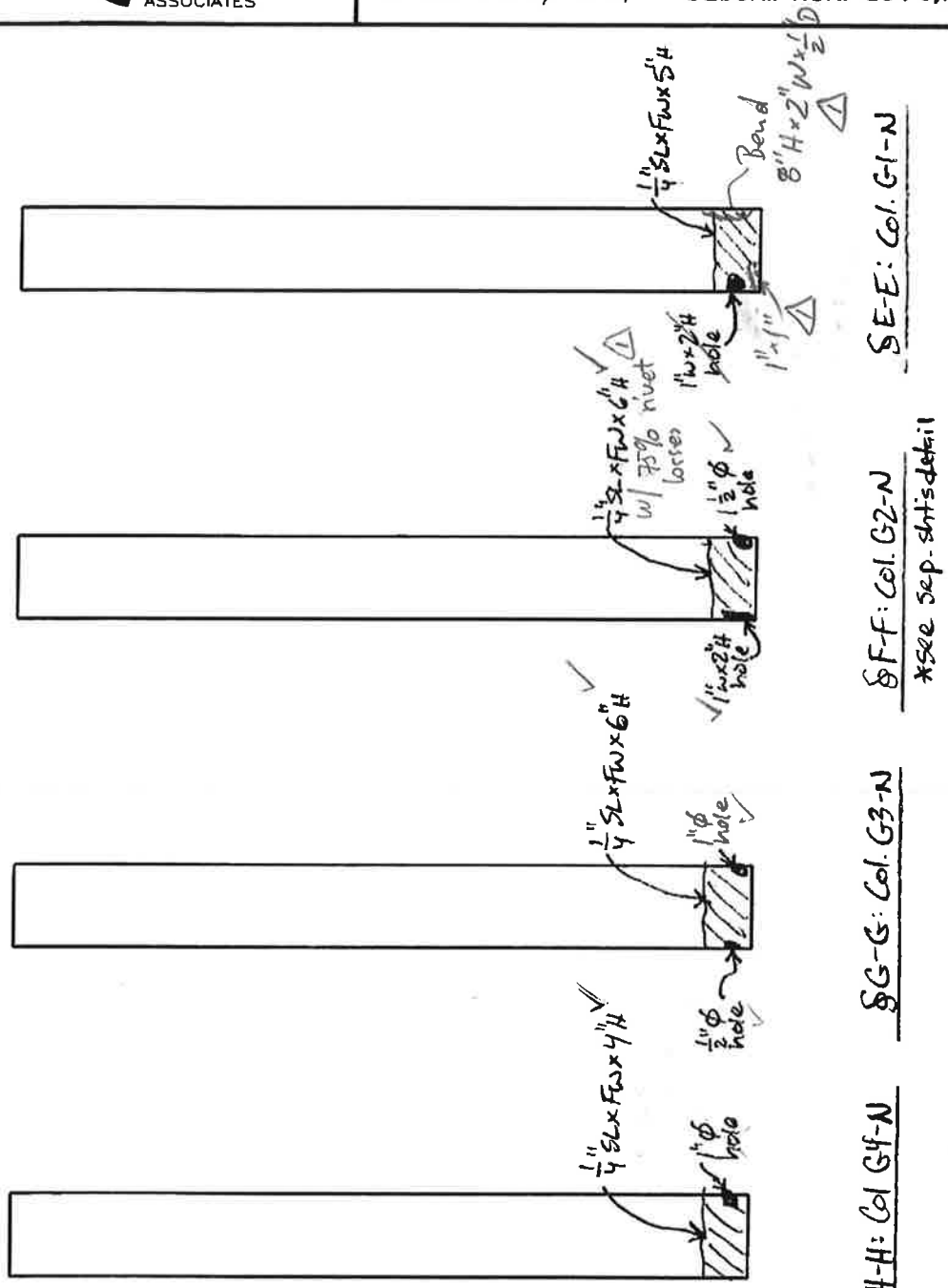

NORTH COLUMNS, NORTH ELEVATION

Gen. Notes

- Same as 'S. Col's, N. Elev's' notes

REVISION	DATE	CREW	COMPANY	REVISION	DATE	CREW	COMPANY
1	3/28/13	SL/DMH	Purcell				

FIELD NOTES

PURCELL ASSOCIATES

JOB NO: 170-2010		BRIDGE NO: 00600R	
DATE: 6/3/10		SHEET 17 19 OF 27 31	
CREW: DAL, DMH	DESCRIPTION: SOUTH COLUMN NOTES		

N

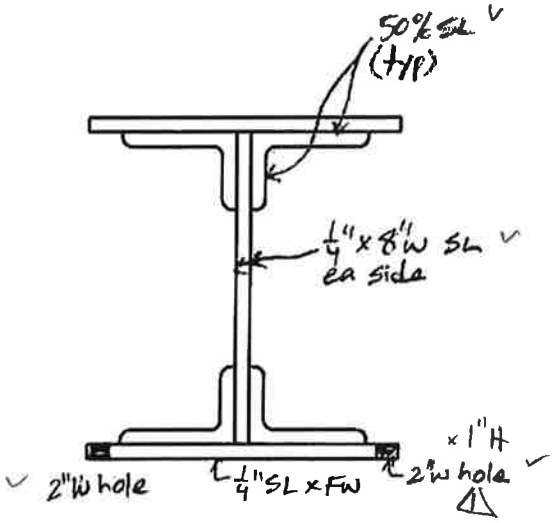

SECTION A-A: COL. G1-S

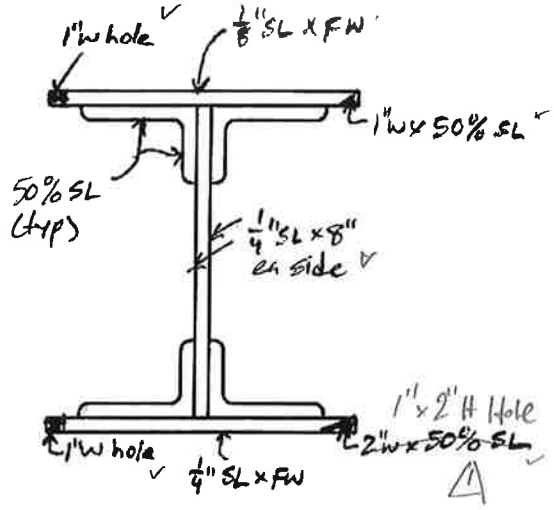

SECTION B-B: COL. G-2S

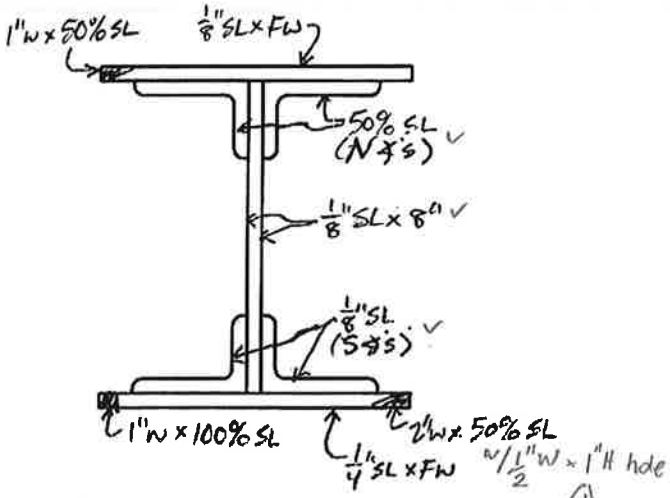

SECTION C-C: COL G3-S

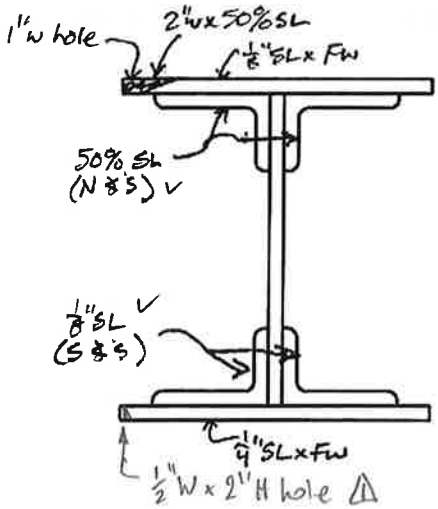

SECTION D-D: COL. G4-S

SOUTH COLUMN SECTIONS

REVISION	DATE	CREW	COMPANY	REVISION	DATE	CREW	COMPANY
1	3/28/13	SL/DMH	Purcell				

FIELD NOTES

PURCELL ASSOCIATES

JOB NO: 170-2010		BRIDGE NO: 600R	
DATE: 6/3/10		SHEET ~~18~~ 20 OF ~~27~~ 31	
CREW: DAL, DMH	DESCRIPTION: N. COLUMN NOTES		

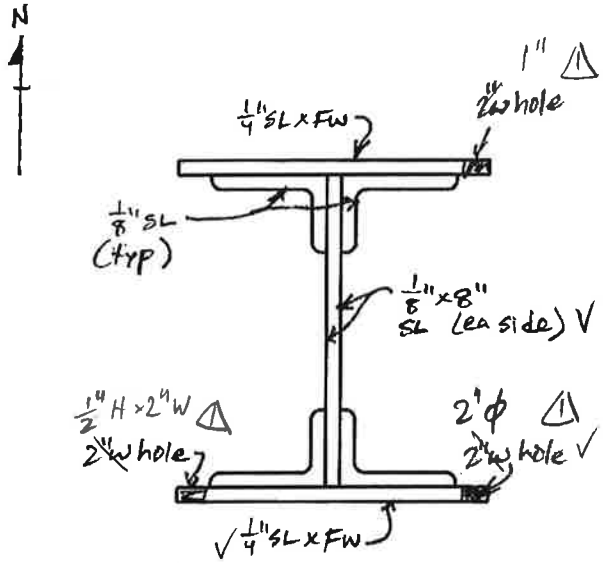

SECTION E-E: COL. G1-N

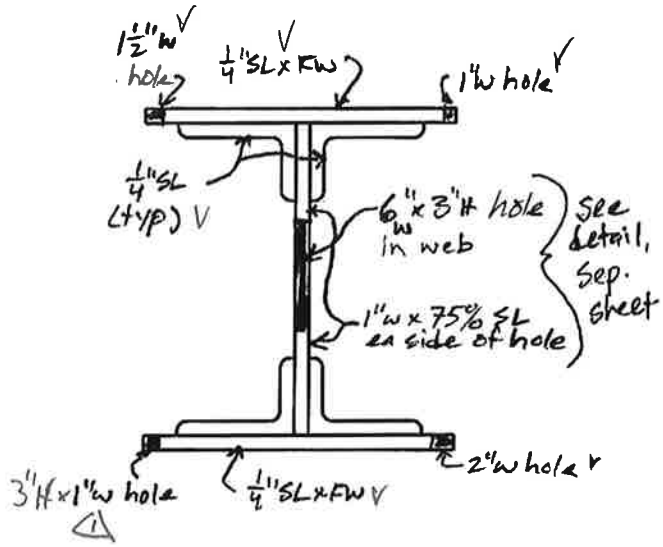

SECTION F-F: COL. G2-N

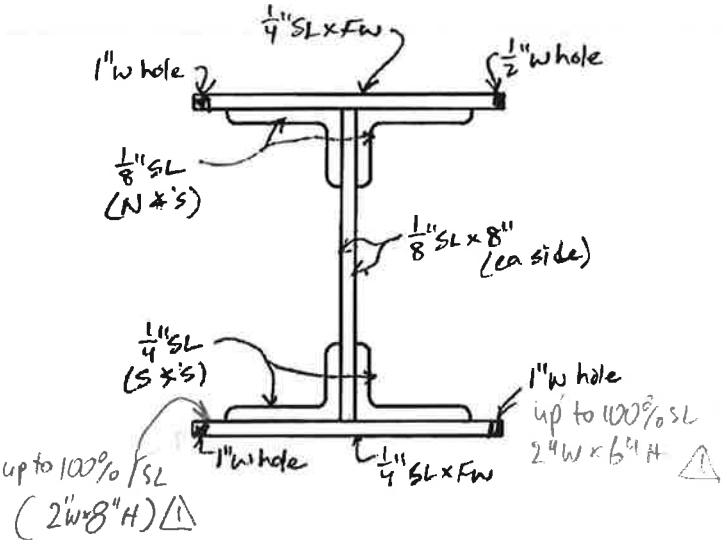

SECTION G-G: COL. G3-N

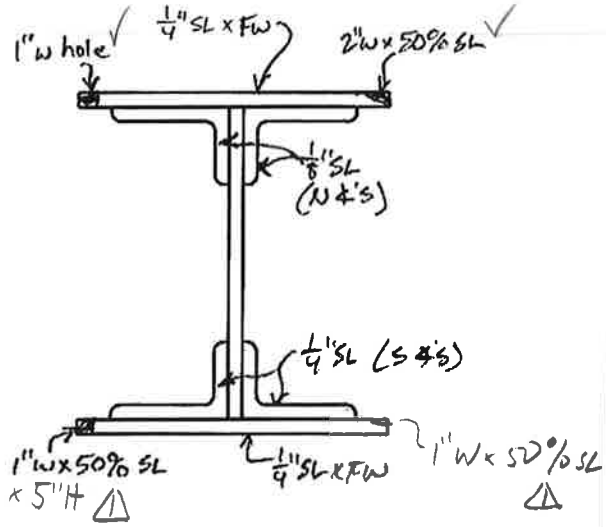

SECTION H-H: COL. G4-N

NORTH COLUMN SECTIONS

REVISION	DATE	CREW	COMPANY	REVISION	DATE	CREW	COMPANY
⚠ 1	3/28/13	SL/DMH	Purcell	⚠			
⚠				⚠			

FIELD NOTES

PURCELL ASSOCIATES

JOB NO: 170-2010		BRIDGE NO: 600R	
DATE: 6/3/10		SHEET 21 OF 31	
CREW: DAL, DMH	DESCRIPTION: N. Col. G2 details		

*See field notes for N&S elev's

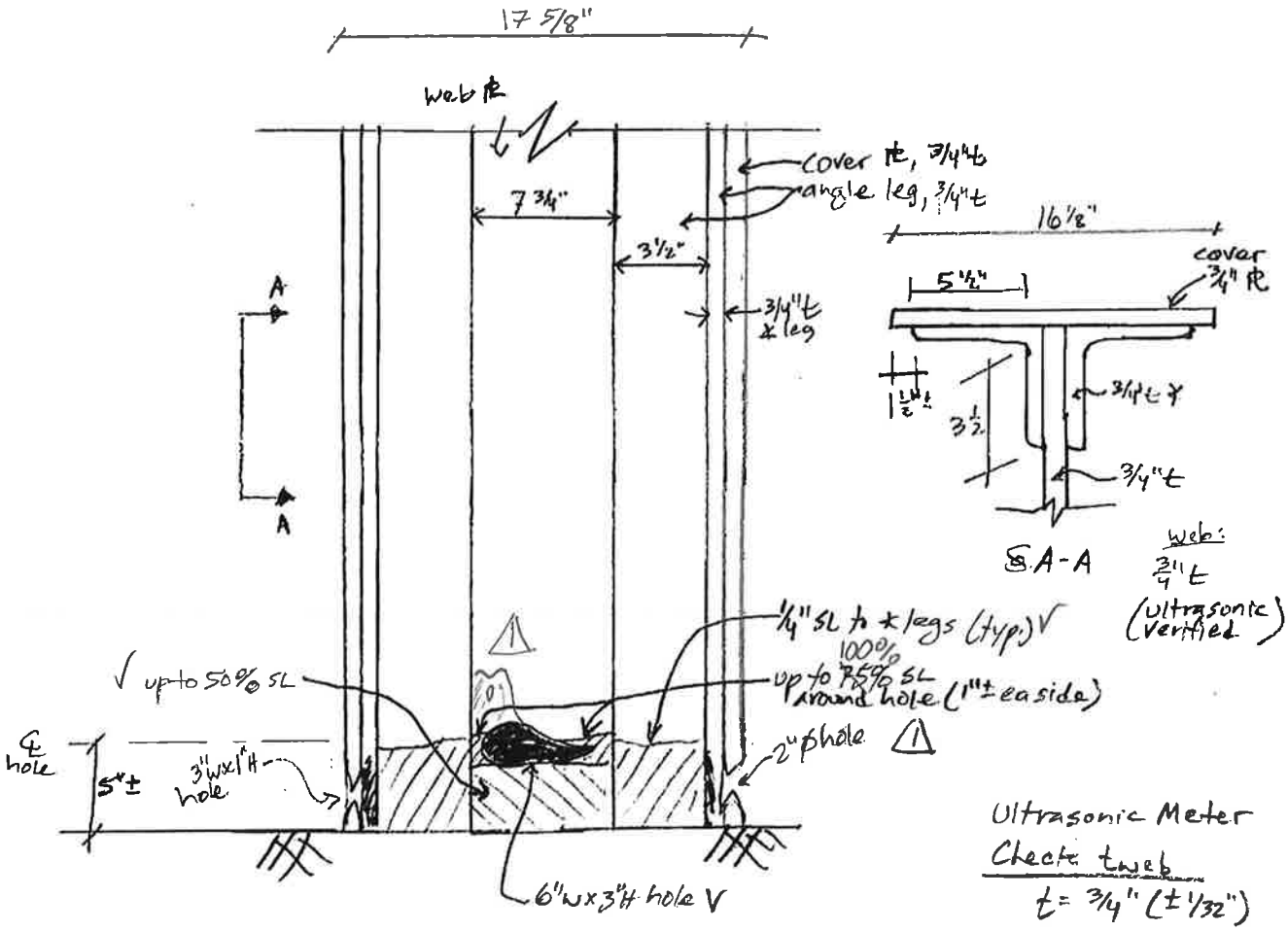

COL. G2-N: W. ELEV.

Ultrasonic Meter Check t web
t = 3/4" (± 1/32")

⚠ No verification was done w/ UM.

REVISION	DATE	CREW	COMPANY	REVISION	DATE	CREW	COMPANY
1	3/28/13	SL/DMH	Purcell				

FIELD NOTES

PURCELL ASSOCIATES

JOB NO: 170-2010		BRIDGE NO: 600R	
DATE: 6/2/10		SHEET ~~20~~ 22 OF ~~27~~ 31	
CREW: DAL, DMH	DESCRIPTION: SUBSTRUCTURE NOTES		

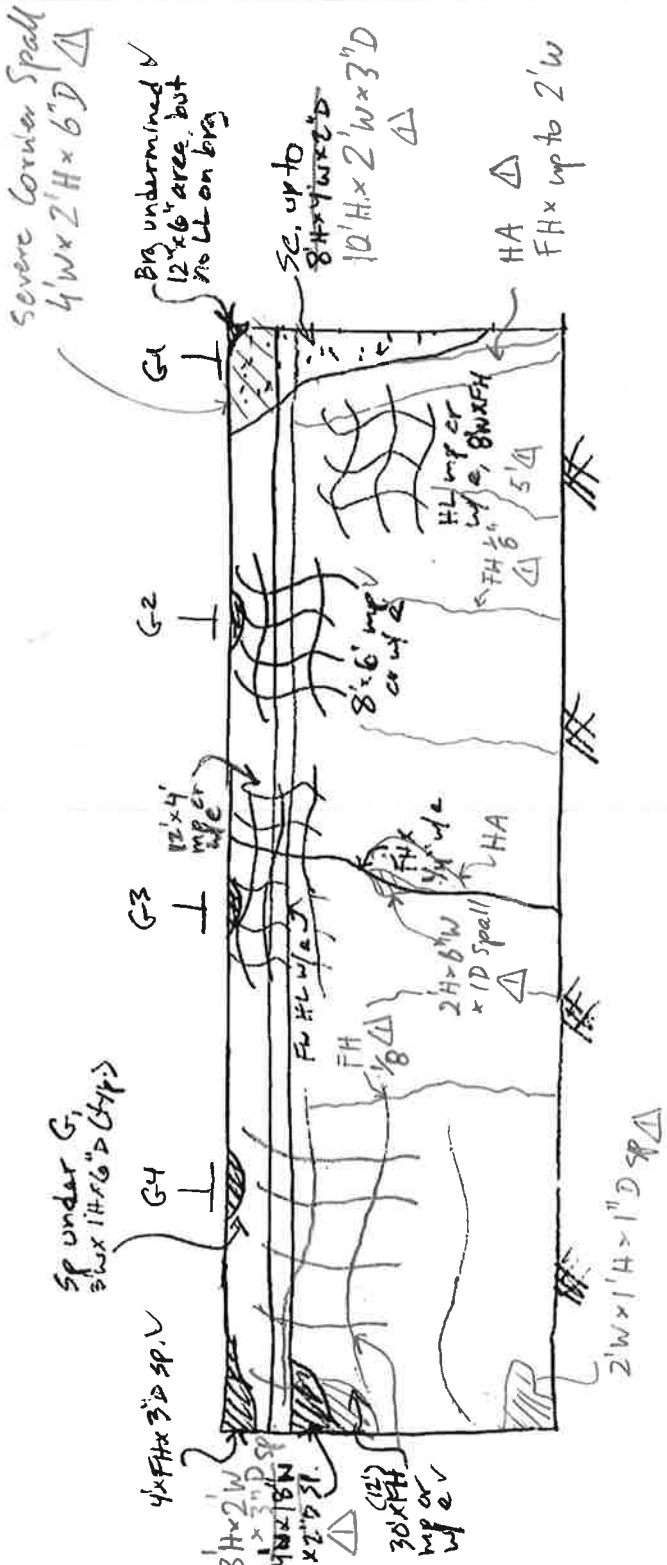

SOUTH ABUTMENT ELEV.

General Notes

- Random areas of mod. scaling, water stains, graffiti throuout
- Hairline vert. & horiz. cr's w/ eff. @ random, up to FH x FH
- Random spalls on top of cap typ. 4"H x 3-6"D
- △ Heavy debris on top of bridge seat w/ grass/shrubs veg. & pigeon waste

REVISION	DATE	CREW	COMPANY
△	3/28/13	SL/DMH	Purcell
△			
△			
△			

FIELD NOTES

AI Engineers, Inc.

DESCRIPTION: SUBSTRUCTURE

JOB NO: 170-2010 BRIDGE NO: 0060R

DATE: 03/11/08 SHEET 21 OF 23

CREW: DH, SE, BNS

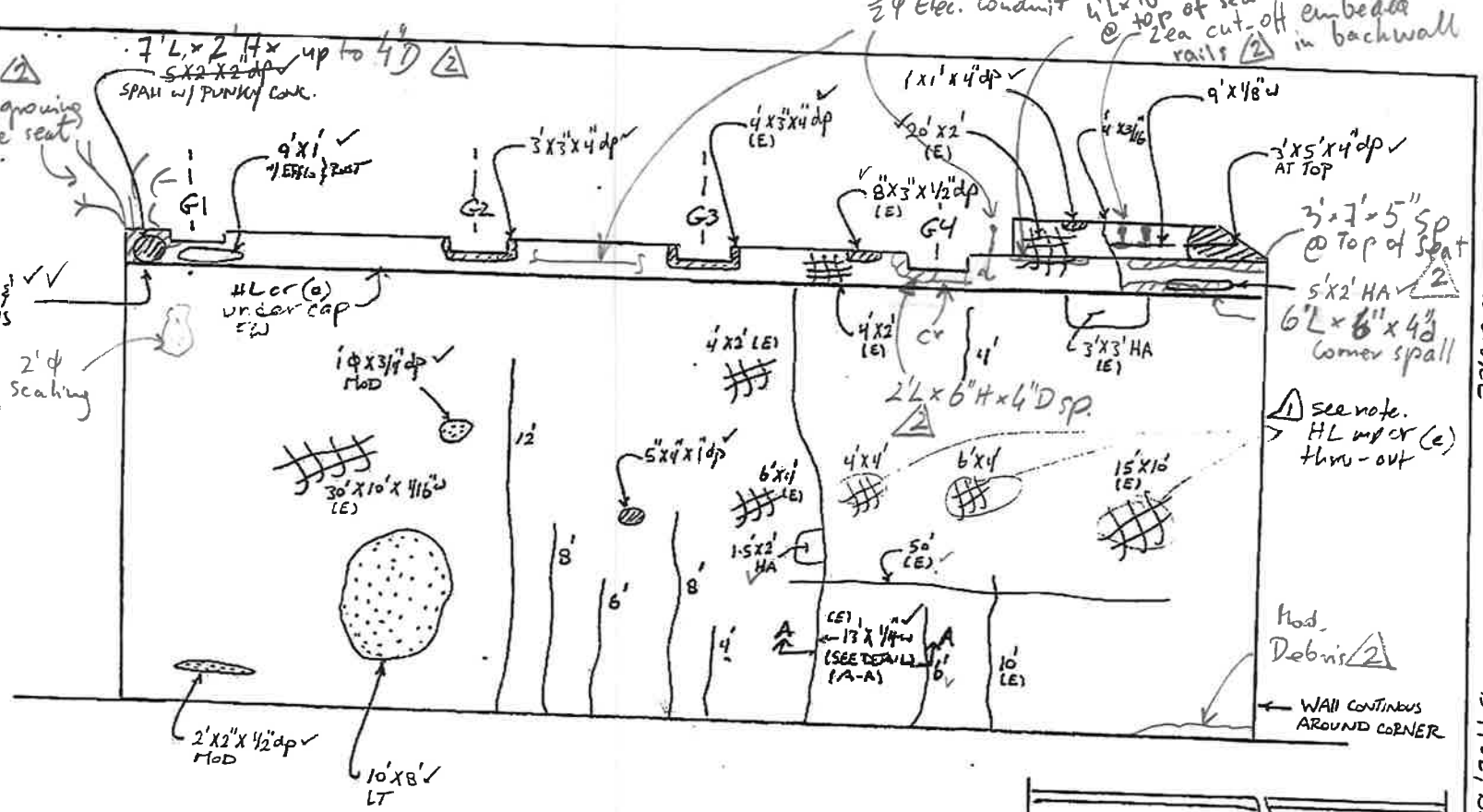

NORTH ABUTMENT ELEV.

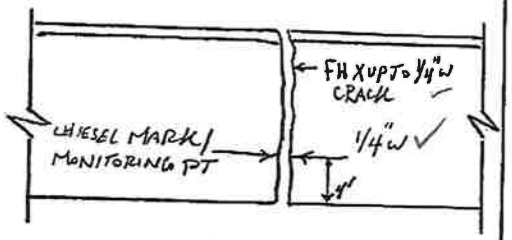

SECTION A-A

No change/no evid. of movmt

GENERAL NOTES:-

- RANDOM AREAS OF MOD.-HVY SCALING AT ABUT. STEM.
- RANDOM BIRD NESTS & DEBRIS AT TOP OF ABUT. SEAT.
- EVIDENCE OF ACTIVE WATER LEAKAGE AT ABUT. STEM.
- TOP OF BACKWALL IS VISIBLE & EXHIBITS RANDOM LONGITUDINAL & TRANSVERSE CRACKS OPEN UP TO 1/8"w, HA'S UP TO 1'x6" IN CENTER TRACK AREA & SPALLS UP TO 2 1/2'x10"x 4"dp IN CENTER TRACK AREA

LEGEND

- E EFFLORESCENCE
- HAIRLINE CRACKS
- MAP CRACKS
- HOLLOW AREA
- SHALLOW REBAR
- SCALE AREA
- SPALL AREA
- SPALL AREA w/EXPOSED REBAR
- HONEY COMBING

Large HL mp cr w/ effl. areas thruout abut; horiz. & vert cr's up to 1/8" thruout

Top of seat is hollow spalling thruout

Graffiti painted over on abut. stem

Heavy debris on top of bridge seat

Moderate veg / moss on bridge seat. (East). Heavy veg (trees) (West)

Revision	Date	Crew	Company
1	6/3/10	DAL, DMN	Purcell
2	2/1/13	SL/DHH	Purcell

FIELD NOTES

Engineers, Inc.

DESCRIPTION: SUBSTRUCTURE

JOB NO: 170-2010 | BRIDGE NO: 00600R

DATE: 03/11/08 | SHEET 22 OF 24 31

CREW: DH, BNS, SE

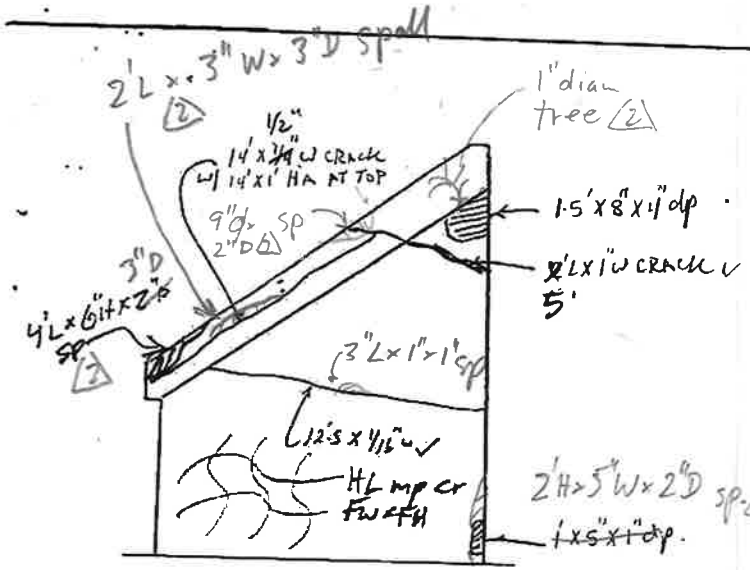

SOUTH EAST WINGWALL

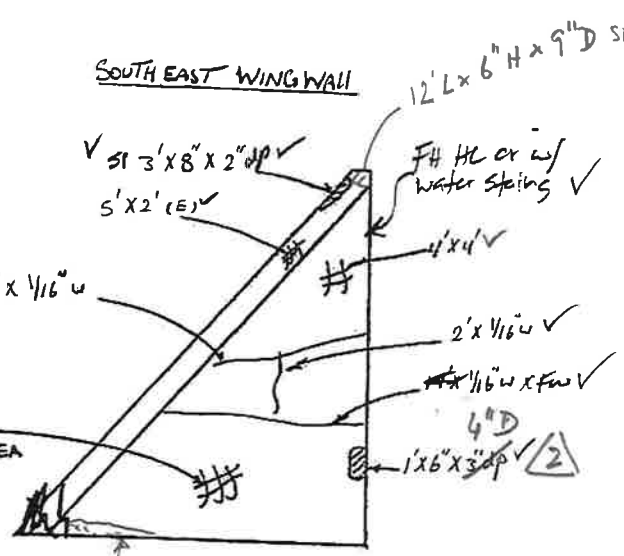

NORTH ~~EAST~~ WEST WINGWALL

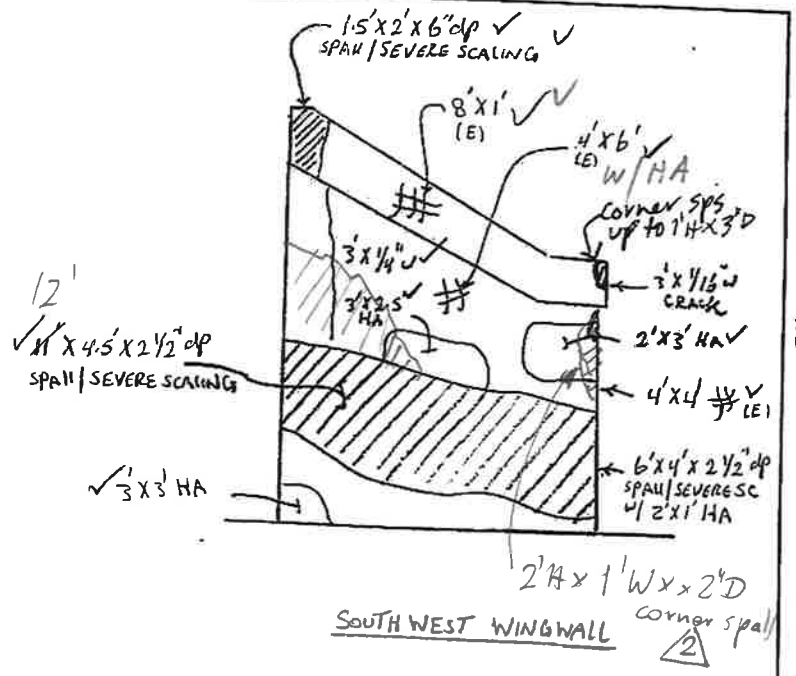

SOUTH WEST WINGWALL

GENERAL NOTES:-

- MINOR EROSION ALONG WINGWALL EMBANKMENTS.
- Hvy veg on top & behind WWs
- No NE WW: this is a retaining wall, but outside the influence of bridge since the E. most track, the 4th one, was previously removed

LEGEND

- E EFFLORESCENCE
- HAIRLINE CRACKS
- MAP CRACKS
- HOLLOW AREA
- SHALLOW REBAR
- SCALE AREA
- SPALL AREA
- SPALL AREA w/EXPOSED REBAR
- HONEY COMBING

Revision	Date	Crew	Company
1	6/3/10	DAL, DMH	Purcell
2	3/28/13	SE / DMH	Purcell

benesch
engineers · scientists · planners
formerly PURCELL

PHOTO LOG

Form BRI-13, Rev. 9/97

Bridge Information System
Image Inventory

– CAMERA A –

Sheet 25 of 31

Bridge No. 6008 Date 2/1/13

Town: WATERBURY Photographer: DMH, EL

Carried / Crossed: B&M RR / W. MAIN ST.

Film Frame #	Image Description
A 1,2	E elev. of Br. // W. Elev. of Br.
3	NW WW Elev.
4-7	N. Abut. Elev's
8	NE WW Elev.
9	SW WW Elev.
10-13	S. Abut. Elev's
14	SE WW Elev.
15-17	Typ. underside of deck, S. Half, btw: G4-G3; G3-G2; G2-G1
18-19	G1 fascia elev's
20	Typ. column to girder cxn (@ G1, Sp.1 shown)
21-22	Gouges to G4 bot. flg, near tr. #35 & South, Sp. 2
23	Impacted rust btw G4 bot. flg. cover plates (near tr. 36, @ G4)
24	Damaged sign support @ G4, near tr 32-33
25	Typ. col. connection @ G4, Sp. 2-N, E elev
26-27	Typ. prot. coating loss (G4, Sp. 2/3 shown)
28-29	Typ. underside of troughs (Sp. 2, near G4, col shown)
30	underside of G4 bot. flg, Sp. 3, near tr. 47
31-32	Knife edge at bot. flg, G4, W side, at tr. 48
33-34	Col. 3, N at G3, E elev.: top cxn
35-37	Knife edge @ G3, E flg., near tr. 54, Sp. 3 (tr. 57 @ N. Abut; pic 36-7)
38-43	Impact damage & gouges to G4 bot flg, N of D/L
44	Perf in trough wall, Sp. 2, tr 51, S near G3
45	Perf in trough wall, Sp. 2, tr 50, N, near G3
46-47	Perf in trough wall, Sp. 2, tr 48, N, near G3

benesch
engineers · scientists · planners
formerly PURCELL

PHOTO LOG

Form BRI-13, Rev. 9/97

Bridge Information System
Image Inventory

– CAMERA A –

Sheet 26 of 31

Bridge No. 600R

Date 2/1/13

Town: WATERBURY

Photographer : DMH/SL

Carried / Crossed: B&M RR / W. MAIN ST.

Film Frame #	Image Description
A 48-9	Pack rust btw bot. flg cover PL's, G3, sp. 2, 8'N of midsp.
50	Rusted out "lower 3" of vert. stiff. btw tr. 43-44, sp. 2 @ G3, E el.
51-53	Gouges in G3 bot flg, E end, near tr. 38-40, sp. 2
54-55	SL to tr. bot. flg. near G3, E elev, tr. 38-40, sp. 2
56-59	Extensive pack rust btw cover PL, G3, W @ tr. 46-41
60-61	Perf in tr. wall, 45 N, sp. 2, midway G2-G3
62-66	Extensive perf's in tr. 55, N wall, btw G2-G3, sp. 2-3
67	G3 @ N. Abut, W elev
68	Perf to tr. wall, tr. 59 N, sp. 3, near G2
69	" " 60, S, " " "
70-73	Knife edge @ G2, both flgs @ N. Abut
74-76	" " " " @ col. 2, N (N of col. 3)
77-78	Perf. to tr. wall @ tr. 67N, sp. 3, btw G1-G2
80-82	Column G1-N (South Elev.)
83-84	Column G1-N (North Elev.)
85-86	Column G2-N (South Elev.)
87	Column G-2N (North Elev.)
88	Column G-2N Web (~~South~~) (West)
89-90	Column G-3N (North Elev.)
91	Column G-3N (South Elev.)
92-93	Column G-3N Web (~~South & North~~) West & East
94-95	Column G-4N (North Elev.)
96	Column G-4N (South Elev.)

benesch
engineers · scientists · planners
formerly PURCELL

PHOTO LOG

Form BRI-13, Rev. 9/97

Bridge Information System
Image Inventory

— CAMERA A —

Sheet 27 of 31

Bridge No. 600R

Date 2/1/13

Town: WATERBURY

Photographer : DMH/SL

Carried / Crossed: B&M RR/ W. MAIN ST.

Film Frame #	Image Description
A 97-98	Column G-4N Web (West & East)
99	Column G-1N Web (East)
100	Bridge ID.
101-102	Wingwall (NE)
103-107	North Abutment
108-111	NW WW Elev. & deficiencies

benesch
engineers · scientists · planners
formerly PURCELL

PHOTO LOG

Form BRI-13, Rev. 9/97

Bridge Information System
Image Inventory

— CAMERA B —

Sheet 28 of 31

Bridge No. 600R

Date 3/28/13

Town: WATERBURY

Photographer : DMH

Carried / Crossed: B&M RR / W. MAIN ST.

Film Frame #	Image Description
B 1	Sp. 2, btw G1 - G2, tr. 50, look E
2-3	Sp. 2, G2 bot. flg. W elev @ tr. ~51
4	Sp. 2, G1 bot flg. E elev @ tr. ~51
5	Sp. 2, Typ. trough, tr. 48, btw G1 - G2, look E
6-8	G1 bot. flg. E elev, Sp. 2 @ tr. 47
9-11	" , W elev, " @ "
12	Typ. deter. tr. bot @ G1 (tr. 47 @ G1 shown)
13-15	Imp. dmg to G2, bot. flg., E side @ tr. 44 (directly abv. DYL)
16	Perf. to tr. 45, S wall, Sp. 2, btw G2 - G3
17-19	G3 bot. flg., W elev's, look N // E // S, @ tr. 42, btw G2 - G3
20-22	G2 bot. flg, E elev's, look N // W // S, @ tr. 38
23	1"Ø perf in N. wall of tr. 40, btw G2-G3, Sp. 2
24-26	Sp. 2 troughs, btw G2 - G3, look N // up // S
27-31	Gouges/scrapes in G3 bot. flg., (@ tr. 38) E side, 5½' E of DYL
32-33	Tr. bot. flanges & G3 E bot. flg. @ tr. 38, look N // S
34	Perf. in tr. 42, S wall, 4' W of G3, Sp. 2
35	Perf. in tr. 41, N wall 5' W of G3, Sp. 2
36	Perfs in tr. 36, N wall, 3' W of G3, Sp. 2
37	Perf in tr. 32, N wall, 6' W of G3, Sp. 2
38	Perf in tr. 33, N wall, " , "
39	Perf in tr. 34, S wall, " , "
40	Perf. in tr. 35, S wall, 4' E of G2, Sp. 2
41-43	G3, bot. flg., E elev, @ tr. 35, look N // W // S
↓ 44-45	G3 bot flg, " , @ tr. 31, E elev's (note imp. rust)

benesch
engineers · scientists · planners
formerly PURCELL

PHOTO LOG

Form BRI-13, Rev. 9/97

Bridge Information System
Image Inventory

– CAMERA B –

Sheet 29 of 31

Bridge No. 600R

Date 3/28/13

Town: WATERBURY

Photographer: DMH

Carried / Crossed: B&M RR / WEST MAIN ST.

Film Frame #	Image Description
B 46	Gouge in G3 bot flg, W end @ tr. 32, sp. 2
47-49	G4 bot. flg., W elev, @ tr. 31, look N // E // S
50-52	Bay btw G3-G4, sp. 2, look N // E // S, from Tr. 32
53-57	Imp. Dmg to G4, bot. flg. E @ tr. 30 to 27, 4' N of DYL
58-60	Cut-off troughs & G4, E bot. flg @ tr. 24-27, E elev's
61-63	Bot. flg cover PL to G4, W side, sheared off @ tr. 24
64	Gouge to G4, bot. flg., W side @ tr. 22/23
65-69	G4, E elev's: sp. 1 & sp. 2
70-72	G4, bot. flg., E elev's, look S // W // N, from Tr. 12
73-74	G4 @ S. Abut & tr's @ S. Abut, btw G3-G4
75	Col. 4-5, W elev @ tr. 8
76-77, 78	G3, bot. flg, E elev, Sp. 1 @ tr. 11 // underside
79-81	G4 E elev's of bot. flg. & cut troughs @ tr. 18: N // W // S
82-83	G4 bot. flg. under, look N from tr. 18
84-85	Gouges to G4 bot. flg. @ W side @ tr. 16-17, sp. 2
86-87	" " " " @ tr. 15, sp. 2
88-89	RH's sheared-off @ G4 bot. flg @ tr. 15/16, sp. 2
90	Perf. in tr. 16, N, Sp. 1, 4' W of G3
91	Perf in tr. 21, S, sp. 1, 4' W of G3
92	Perf in Tr. 21, N, Sp. 1, 4' E of G2
93	Perf in Tr. 23, N, Sp. 1, 3' E of G2
94	Perf #2 in Tr. 23N, sp. 2, 4' W of G3
95-97	N. Abut. / NE WW elev's
↓ 98	Perf in 25N, sp. 2, 4' W of G3

benesch
engineers · scientists · planners
formerly PURCELL

PHOTO LOG

Form BRI-13, Rev. 9/97

Bridge Information System
Image Inventory

— CAMERA B —

Sheet 30 of 31

Bridge No. 600R

Date 3/28/13

Town: WATERBURY

Photographer : DMH

Carried / Crossed: B&M RR / WEST MAIN ST.

Film Frame #	Image Description
B 99	Perf. in 26-S, Sp. 2, 4' W of G3
100	Perf. in 26-N, Sp. 2, 4' W of G3
101-104	G2 @ S, Abut & col. 2-S, E elev's
105	Perf #2 in Tr. 26-S, Sp-2, 3' E of G2
106	Perf in 30-S, Sp. 2, 3' E of G2
107	Perf in 29-N, Sp. 2, 4' W of G3
108-9	(2) Perfs in 30-N, Sp. 2, bfw G2-G3
110-111	(2) " 31-N, " " "
112	Perf in 32-N, 4' W of G3, Sp-2
113	Perf in 35-S, 4' E of G2, Sp-2
114-115, 116	Underside of deck, bfw G1 & G2, Sp. 2 // Sp. 1
117-121	G1 fascia/elev's, from Sp. 1 to Sp. 3
122	W. Elev of Br. 600R
123	Clearance signs at the W appr. to the br. (new signs)
124	E. Elev. of Br. 600R

bfw G2-G3

benesch
engineers · scientists · planners
formerly PURCELL

PHOTO LOG

Form BRI-13, Rev. 9/97

Bridge Information System
Image Inventory

— CAMERA C —

Sheet 31 of 31

Bridge No. 600R

Date 3/28/13

Town: WATERBURY

Photographer : SL

Carried / Crossed: B&M RR / W. MAIN ST.

Film Frame #	Image Description
C 1-2	South Appr. (look N)
3-4	South Appr. (look S)
5	Bridge Deck - West track (look N)
6-7	Bridge Deck - Center track (")
8	Typical Deck detail
9-10	Bridge Deck - E. track (look N)
11	Girder 4, Inside face (W)
12-13	Girder 4, Outside face (E)
14	Girder 3, E elev.
15	Girder 3, W elev.
16	Girder 2, E elev
17	Girder 2, W elev
18	Girder 1, E elev (inside face)
19	Girder 1, W elev (outside face)
20-22	Typical topside of deck details & losses to troughs
23	North approach, look N
24	North approach, look S
25	Bridge deck (E track), look S
26	Bridge deck (Center track), look S
27	Bridge deck (W track), look S
28-31	Conc. deter. (typ.) @ Girder G3
32-34	S. Abut. - Bridge Seat deter. & debris, spalls
35	East elev. of Br.
36	Br. from N. Appr.

benesch
engineers · scientists · planners
formerly PURCELL

PHOTO LOG

Form BRI-13, Rev. 9/97

Bridge Information System

Image Inventory

Sheet ____ of ____

Bridge No. 600R

Date 3/28/13

Town: WATERBURY

Photographer : SL

Carried / Crossed: B&M RR / W. MAIN ST.

Film	Frame #	Image Description
C	37	SE WW Elev.
	38	S. Abut. Elev.
	39	E. Elev. of Br. 600R
	40	NE WW Elev.
	41-42	S. Abut. - Undermining under G4 & G3
	43	S. Abut. Elev.
	44	S. Abut. - Undermining under G1
	45-46	SW WW Elev.
	47-49	W. Elev. of Br. 600R
	50	NW WW Elev.
	51-58	N. Abut. Elev's
	59-60	NE WW Elev's
	61,63	Br. ID
	62	Conc. deterior., typ.
	63	Col. 1-5 W Elev.

Bridge No.	00600R	**Inspected by:**	Slawomir Lachcik
Town:	Waterbury	**Inspected by:**	David M. Hines
Feature Carried:	Boston & Maine Railroad	**Date Inspected:**	3/28/2013
Feature Crossed:	West Main Street	**Project No.:**	170-2010

Photo # 1:
Bridge ID

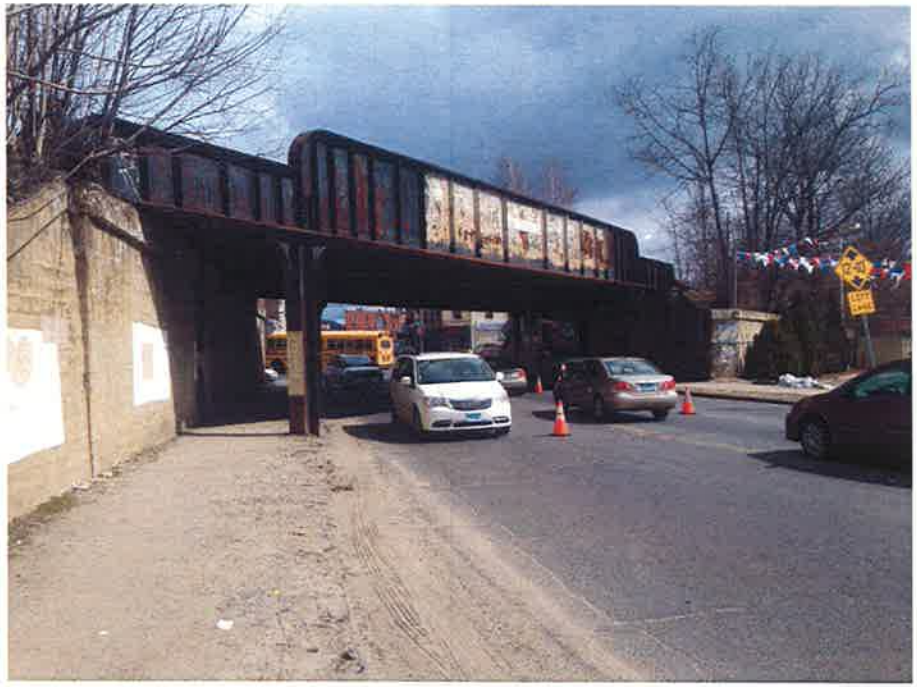

Photo # 2:
Typical structure, looking north (west fascia of Girder G1 shown)

PURCELL ASSOCIATES

Bridge No.	00600R	**Inspected by:**	Slawomir Lachcik
Town:	Waterbury	**Inspected by:**	David M. Hines
Feature Carried:	Boston & Maine Railroad	**Date Inspected:**	3/28/2013
Feature Crossed:	West Main Street	**Project No.:**	170-2010

Photo # 3:
West elevation

Photo # 4:
East elevation

PURCELL ASSOCIATES

Bridge No.	00600R	**Inspected by:**	Slawomir Lachcik
Town:	Waterbury	**Inspected by:**	David M. Hines
Feature Carried:	Boston & Maine Railroad	**Date Inspected:**	3/28/2013
Feature Crossed:	West Main Street	**Project No.:**	170-2010

Photo # 5:
Bridge from south approach

Photo # 6:
Bridge from north approach

PURCELL ASSOCIATES

Bridge No.	00600R	**Inspected by:**	Slawomir Lachcik
Town:	Waterbury	**Inspected by:**	David M. Hines
Feature Carried:	Boston & Maine Railroad	**Date Inspected:**	3/28/2013
Feature Crossed:	West Main Street	**Project No.:**	170-2010

Photo # 7:
South approach, from bridge

Photo # 8:
North approach, from bridge

PURCELL ASSOCIATES

Bridge No.	00600R	**Inspected by:**	Slawomir Lachcik
Town:	Waterbury	**Inspected by:**	David M. Hines
Feature Carried:	Boston & Maine Railroad	**Date Inspected:**	3/28/2013
Feature Crossed:	West Main Street	**Project No.:**	170-2010

Photo # 9:
Typical top of deck at active (center) track, between girders G2 and G3.

Photo # 10:
Typical top of deck at east track, between girders G3 and G4 (note vegetation and rail section blocking the track)

PURCELL ASSOCIATES

Bridge No.	00600R	**Inspected by:**	Slawomir Lachcik
Town:	Waterbury	**Inspected by:**	David M. Hines
Feature Carried:	Boston & Maine Railroad	**Date Inspected:**	3/28/2013
Feature Crossed:	West Main Street	**Project No.:**	170-2010

Photo # 11:
Deteriorated and dislodged timber ties between rail and top of trough; typical spalled concrete curb along girder fascia

Photo # 12:
Typical section loss to orthotropic deck trough top cover plate underneath timber ties; rivet heads lost and section loss to trough top cover plates

PURCELL ASSOCIATES

Bridge No.	00600R	**Inspected by:**	Slawomir Lachcik
Town:	Waterbury	**Inspected by:**	David M. Hines
Feature Carried:	Boston & Maine Railroad	**Date Inspected:**	3/28/2013
Feature Crossed:	West Main Street	**Project No.:**	170-2010

Photo # 13:
Typical underside of orthotropic deck (under active track, between G2 and G3 shown)

Photo # 14:
Typical section of orthotropic deck trough, east fascia at G4 (note that girder G5 has been removed and the deck trough torch-cut for removal)

PURCELL ASSOCIATES

Bridge No.	00600R	**Inspected by:**	Slawomir Lachcik
Town:	Waterbury	**Inspected by:**	David M. Hines
Feature Carried:	Boston & Maine Railroad	**Date Inspected:**	3/28/2013
Feature Crossed:	West Main Street	**Project No.:**	170-2010

Photo # 15:
Typical rusted-through hole in orthotropic deck trough web plate (span 2, trough #26, south side, 4' west of G3 shown)

Photo # 16:
Typical rusted-through hole in orthotropic deck trough web plate (span 2, trough #26, north side, 4' west of G3 shown)

PURCELL ASSOCIATES

Bridge No.	00600R	**Inspected by:**	Slawomir Lachcik
Town:	Waterbury	**Inspected by:**	David M. Hines
Feature Carried:	Boston & Maine Railroad	**Date Inspected:**	3/28/2013
Feature Crossed:	West Main Street	**Project No.:**	170-2010

Photo # 17:
Typical girder elevation (note protective coating failed)

Photo # 18:
Typical girder fascia and bottom flange (Girder G1 west fascia shown; note protective coating peeling)

PURCELL ASSOCIATES

Bridge No.	00600R	**Inspected by:**	Slawomir Lachcik
Town:	Waterbury	**Inspected by:**	David M. Hines
Feature Carried:	Boston & Maine Railroad	**Date Inspected:**	3/28/2013
Feature Crossed:	West Main Street	**Project No.:**	170-2010

Photo # 19:
Impact damage to girder G4 bottom flange (note section of cover plate and several rivet heads lost)

Photo # 20:
Impact damage to girder G4 bottom flange, east fascia (note losses to cover plates and debris lodged between plates)

PURCELL ASSOCIATES

Bridge No.	00600R	**Inspected by:**	Slawomir Lachcik
Town:	Waterbury	**Inspected by:**	David M. Hines
Feature Carried:	Boston & Maine Railroad	**Date Inspected:**	3/28/2013
Feature Crossed:	West Main Street	**Project No.:**	170-2010

Photo # 21:
Typical orthotropic deck trough and girder connection to column

Photo # 22:
Typical column elevation

PURCELL ASSOCIATES

Bridge No.	00600R	**Inspected by:**	Slawomir Lachcik
Town:	Waterbury	**Inspected by:**	David M. Hines
Feature Carried:	Boston & Maine Railroad	**Date Inspected:**	3/28/2013
Feature Crossed:	West Main Street	**Project No.:**	170-2010

Photo # 23:
Typical section loss to column cover plate at ground level

Photo # 24:
Typical impact damage and resulting bend to flange of column

PURCELL ASSOCIATES

Bridge No.	00600R	**Inspected by:**	Slawomir Lachcik
Town:	Waterbury	**Inspected by:**	David M. Hines
Feature Carried:	Boston & Maine Railroad	**Date Inspected:**	3/28/2013
Feature Crossed:	West Main Street	**Project No.:**	170-2010

Photo # 25:
Column G2-N severe section losses to column at ground level

Photo # 26:
Column G3-N section losses to web at ground-level

PURCELL ASSOCIATES

Bridge No.	00600R	**Inspected by:**	Slawomir Lachcik
Town:	Waterbury	**Inspected by:**	David M. Hines
Feature Carried:	Boston & Maine Railroad	**Date Inspected:**	3/28/2013
Feature Crossed:	West Main Street	**Project No.:**	170-2010

Photo # 27:
South abutment elevation (note hairline cracking and efflorescence visible)

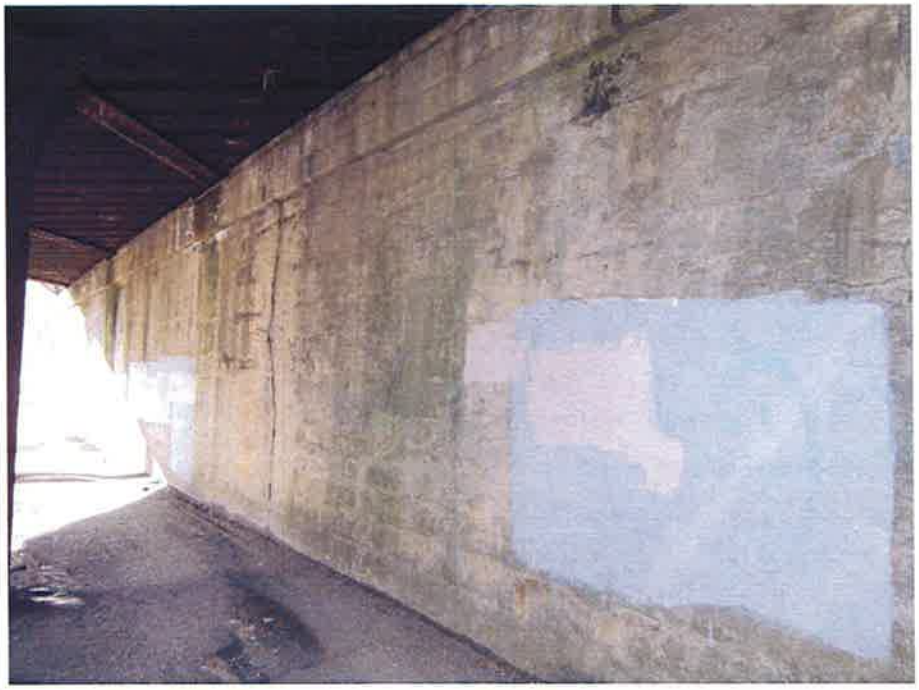

Photo # 28:
North abutment elevation

PURCELL ASSOCIATES

Bridge No.	00600R	**Inspected by:**	Slawomir Lachcik
Town:	Waterbury	**Inspected by:**	David M. Hines
Feature Carried:	Boston & Maine Railroad	**Date Inspected:**	3/28/2013
Feature Crossed:	West Main Street	**Project No.:**	170-2010

Photo # 29:
Full height vertical crack in the north abutment

Photo # 30:
Typical scaling and spalling of abutment seat, with hairline cracks and efflorescence (note that the undermined bearing shown is under the inactive track, G1 at south abut.)

PURCELL ASSOCIATES

Bridge No.	00600R	**Inspected by:**	Slawomir Lachcik
Town:	Waterbury	**Inspected by:**	David M. Hines
Feature Carried:	Boston & Maine Railroad	**Date Inspected:**	3/28/2013
Feature Crossed:	West Main Street	**Project No.:**	170-2010

Photo # 31:
Southwest wingwall elevation (note severe scaling, hairline cracks with efflorescence and deterioration)

Photo # 32:
East portion of south abutment elevation (note hairline cracking with efflorescence and spalls along cap)

PURCELL ASSOCIATES

Bridge No.	00600R	**Inspected by:**	Slawomir Lachcik
Town:	Waterbury	**Inspected by:**	David M. Hines
Feature Carried:	Boston & Maine Railroad	**Date Inspected:**	3/28/2013
Feature Crossed:	West Main Street	**Project No.:**	170-2010

Photo # 33:
Advance warning clearance signs at the west approach to the bridge (note different clearances depending on the lane)

Photo # 34:
Advance warning clearance signs at the east approach to the bridge

PURCELL ASSOCIATES